PipeFeeder HighSpeed

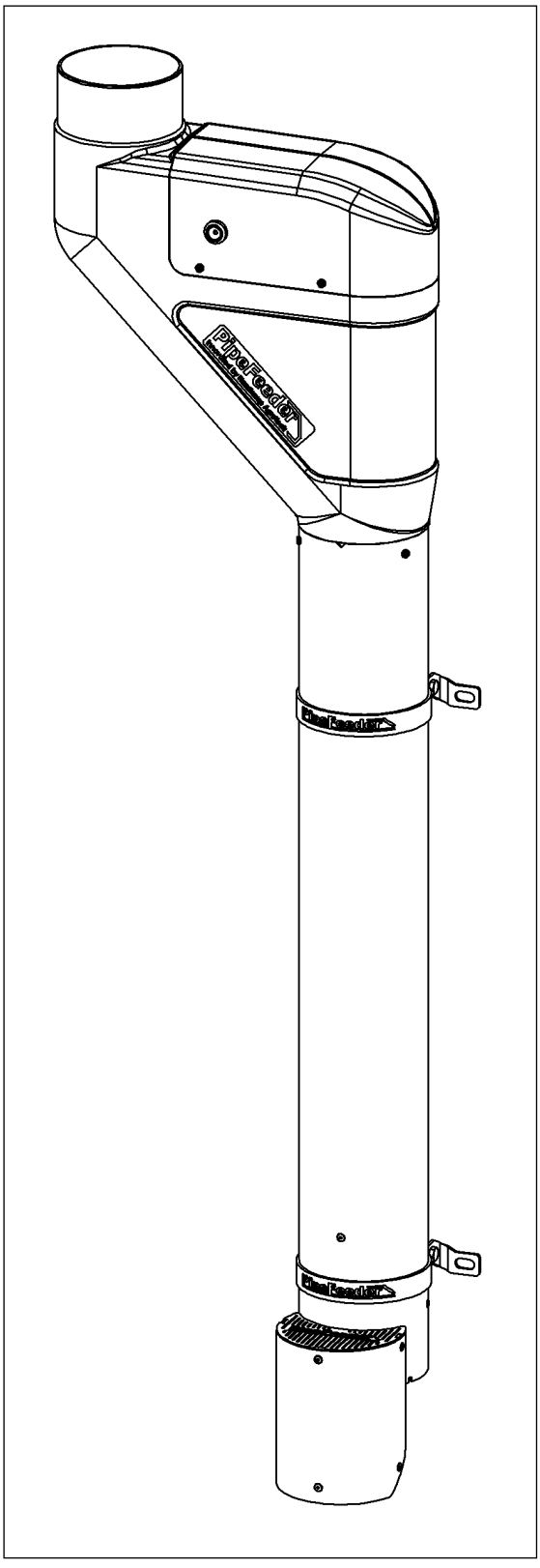

Rotary Milking Parlour Feeder
24VDC

Installation and operating instruction **EN**

HANSKAMP
Innovation for dairy farming

Article number: 010-107-000

Date: February 2017
Version 2.0 - Translation of original instructions for use
According to Annex 1 Chapter 1.7.4 Machine guideline 2006/42/EG

Doetinchem,
The Netherlands
www.hanskamp.nl/en

Preface

Manual Contents

This manual contains the information necessary for the correct installation and operation of a Hanskamp PipeFeeder.
Study and understand this information thoroughly before configuration of the PipeFeeder. Failure to do so could result in damage to equipment. Please consult your milking equipment dealer if you do not understand the information in this manual, or if you need additional information. All information in this manual has been compiled with care. Hanskamp shall not be liable for errors or faults in this manual. The recommendations are meant to serve as guidelines. All instructions, pictures and specifications in this manual are based on the latest information that was available at the time of publication. Your PipeFeeder may comprise improvements, features or options that are not covered in this manual.

Applicability

The table below shows the type numbers of the PipeFeeder for which this manual is applicable.

Model designation

Model	Typenumber
PipeFeeder HighSpeed	029-000-000

Contact number Local Service Provider

We suggest you write the name, address, telephone number and e-mail address of your local service provider contact in the table below. This makes sure you can easily find the information.

Naam	
Adres	
Telefoonnummer	
E-mailadres	

1. Introduction

The PipeFeeder HighSpeed suits all types of milking or feeding carousels and can be linked to any brand or type of feed computer. The stainless steel pipe holds the stock of concentrate. As a feed trough of the carousel comes under the PipeFeeder the electric motor of the dosator gets a signal via the sensor. The PipeFeeder immediately releases the required feed quantity on time, very rapidly and precisely.
Once the PipeFeeder HighSpeed receives a signal that all the concentrates have been released on time it shuts down at once. Any concentrate left in the pipe will fall into the trough so dairy cow and goat farmers can be assured that with the PipeFeeder HighSpeed livestock always get exactly the right amount of concentrates.

The information in this manual is for farmers and technicians.

- Dairy farmers use the information to test and adjust the PipeFeeder HighSpeed or to list overviews.
- Technicians use the information to install and setup the PipeFeeder HighSpeed.

2. Safety

2.1 Introduction

The safety alert symbol identifies important safety messages on your PipeFeeder and in the manual. When you see this symbol, be alert to the possibility of personal injury or death. Follow the instruction of the safety message.



Safety Alert Symbol

2.2 Signal Words

Note the use of the signal words DANGER, WARNING and CAUTION with the safety messages. The signal word for each message uses the following guidelines:



Warning! Indicates a potentially hazardous situation that, if not avoided, could result in death or serious injury, and includes hazards that are exposed when guards are removed.



Danger! Indicates a imminently hazardous situation that, if not avoided, will result in death or serious injury.

2.3 Safety Instructions

YOU are responsible for the SAFE operation and maintenance of your PipeFeeder. YOU must make sure that you and anyone else who is going to operate, maintain or work in the vicinity of the PipeFeeder knows all the related SAFETY information in this manual.

YOU are the key to safety. Good safety practices protect you and the people around you. Make these practices a working part of your safety program. Make sure EVERYONE who operates, maintains or works near the PipeFeeder obeys the safety precautions. Do not risk injury or death by ignoring good safety practices.

- PipeFeeder owners must train operators before they operate the PipeFeeder. This training must be repeated at least annually.
- The operator must read, understand and obey all safety and operating instructions in the manual.
- A person who has not read and understood all safety and operating instructions is not permitted to operate the PipeFeeder.
- Do not modify the equipment in any way. Unauthorized modification may impair the function and/or safety and could affect the life of the equipment, and persons.
- Only use approved spare parts, and make sure they are only installed by authorized technicians.
- The PipeFeeder HighSpeed should be shielded, so that the dosing system is unreachable. This separation should meet European standards and guidelines. Without this separation the PipeFeeder HighSpeed doesn’t meet the safety requirements of Hanskamp. If the PipeFeeder doesn’t meet the safety requirements, there can not be derived any rights.

2.3.1 General Safety

- Read and understand the manual and all safety signs before you connect power supplies to operate or adjust the PipeFeeder.
- Only trained persons are permitted to operate the PipeFeeder. A first-aid kit must be available near the PipeFeeder. Store in a highly visible place.
- A carbon dioxide or foam fire extinguisher must be available near the PipeFeeder. Store the fire extinguisher in a highly visible place.
- Install all protective covers and guards before you operate the PipeFeeder.
- Wear the correct protective clothing and equipment. Disconnect and isolate the electrical power supply before you clean or do maintenance on the PipeFeeder.
- Know the emergency medical centre number for your area.
- Contact your nearest milking equipment dealer provider if you have any questions.
- Review safety related items with all operators frequently (annually).
- The PipeFeeder HighSpeed should be shielded, so that the dosing system is unreachable. This separation should meet European standards and guidelines. Without this separation the PipeFeeder HighSpeed doesn't meet the safety requirements of Hanskamp. If the PipeFeeder doesn't meet the safety requirements, there can not be derived any rights.

2.3.2 Electrical Safety

- Only an authorized electrician must install the electrical power supply for the PipeFeeder.
- Make sure the electrical grounding of the electrical system and all parts of the PipeFeeder meet the local rules and regulations.
- Replace any damaged electrical lines, conduits, switches and components immediately.
- Isolate the electrical power supply before you open the lid of the PipeFeeder to work on the electrical system.

2.3.3 Installation Safety

- Read and understand the instructions in this manual.
- Make sure the PipeFeeder is correctly installed.

2.3.4 Operating Safety

- Read and understand the applicable manual and all safety signs before you connect power supplies to operate, maintain or adjust the PipeFeeder.
- Only trained persons are permitted to operate the PipeFeeder.
- Switch off the electrical power supply by taking plug out of the power point and secure the plug before you clean or do maintenance on the PipeFeeder.
- Install the covers, shields and other safety devices before you operate the PipeFeeder.
- Keep hands, feet, hair and clothing away from all the electrical parts.
- Keep unauthorized persons, especially small children away from the PipeFeeder at all times.
- Before the electrical supply is attached to the PipeFeeder, make sure all parts are tight and that all the parts are in good condition.
- Contact your nearest milking equipment dealer if you have any questions.

2.3.5 Maintenance Safety

- Read and understand the applicable manual and all safety signs before you connect power supplies to operate, maintain or adjust the PipeFeeder.
- Only trained persons are permitted to maintain the PipeFeeder.
- Switch off the electrical power supply by taking plug out of the power point and secure the plug before you clean or do maintenance on the PipeFeeder.
- Wear protective clothing and safety goggles when you do work on the pneumatic system.
- Make sure all the covers and guards are installed when maintenance work is complete.

2.3.6 Safety Decals

- General safety messages appear in this safety messages section. Specific safety messages are in applicable parts of this manual when potential hazards may occur if the instructions or procedures are not followed.

Safety stickers:
The user and installer are responsible for the safe operation and maintenance of the PipeFeeder. Safety stickers are used to ensure safety in and around the PipeFeeder. These stickers must be placed correctly. Information about which stickers should be attached where can be found further on in these instructions for installation and use.

Applying the stickers:
- Make sure the surface is dry and clean.
- Make sure the surface temperature is at least 5°C.
- Find the right position for the sticker.
- Remove a small portion of the foil on the back.
- Place the sticker on the surface and press a small portion of the self-adhesive layer onto the surface.
- Carefully remove the foil and press down the rest of the sticker.
- Remove any air bubbles with a needle and use the foil to smoothen the sticker.

Maintenance of the stickers:
- Keep the safety stickers clean and legible. Clean the safety stickers with soap and water. Do not use any solvents or abrasives that could damage the safety stickers.
- Replace missing or illegible safety stickers.

Safety stickers are available by Hanskamp. Always use the article numbers in your correspondence.



001-702-000 Warning sticker:
Danger risk of getting your hand stuck under the pipe.



001-755-000 Warning sticker:
The PipeFeeder can start automatically.

3. Installation instruction

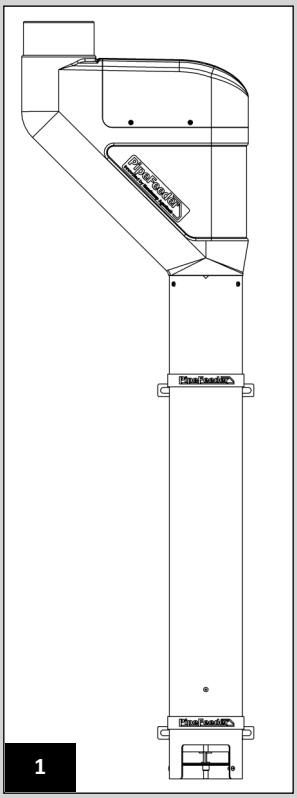

General description:
Hanskamp's PipeFeeder is an electric feed dosing system developed for feeding concentrates in pellet form (Pic. 1) PipeFeeder is designed for the supply of concentrate, either linked to the feed computer and used for feeding in a milking rotary. Please read the whole installation instructions and keep the safety instructions in mind.

If the PipeFeeder is controlled by an MotorController from Hanskamp, see also installation instructions Art. No. 010-105-000. This can be requested from the manufacturer. If the PipeFeeder is not controlled by the MotorController, always consult the manual for the relevant control unit. See the annex for the order numbers and names of the various parts.

Available MotorControllers:	
Art.nr.	**Description**
002-816-000	1 feed type incl. power supply 10A
002-817-000	2 feed type's incl. power supply 10A
002-818-000	3 feed type's incl. power supply 10A
002-819-000	4 feed type's incl. power supply 10A

Transport and storage:
The PipeFeeder will be shipped in a box containing two PipeFeeders. Depending on the number of PipeFeeders HighSpeed, the items will be send on a pallet. This pallet is completely sealed and the corners are covered with tape to prevent damage. The PipeFeeder is also stored this way.

Please note! Always use an appropriate vehicle (forklift truck, pallet fork, pump truck, etc.) to move the pallet.
Please note! Parts may fall off the pallet/box when it is being unpacked.

The box contains:
1. 2x PipeFeeder HighSpeed feeding dosator;
2. 2x bag with 2 pipe clamps Art.No.:001-902-000;
3. 2x cover for motor;
4. 2x bag with screws for cover and grommet

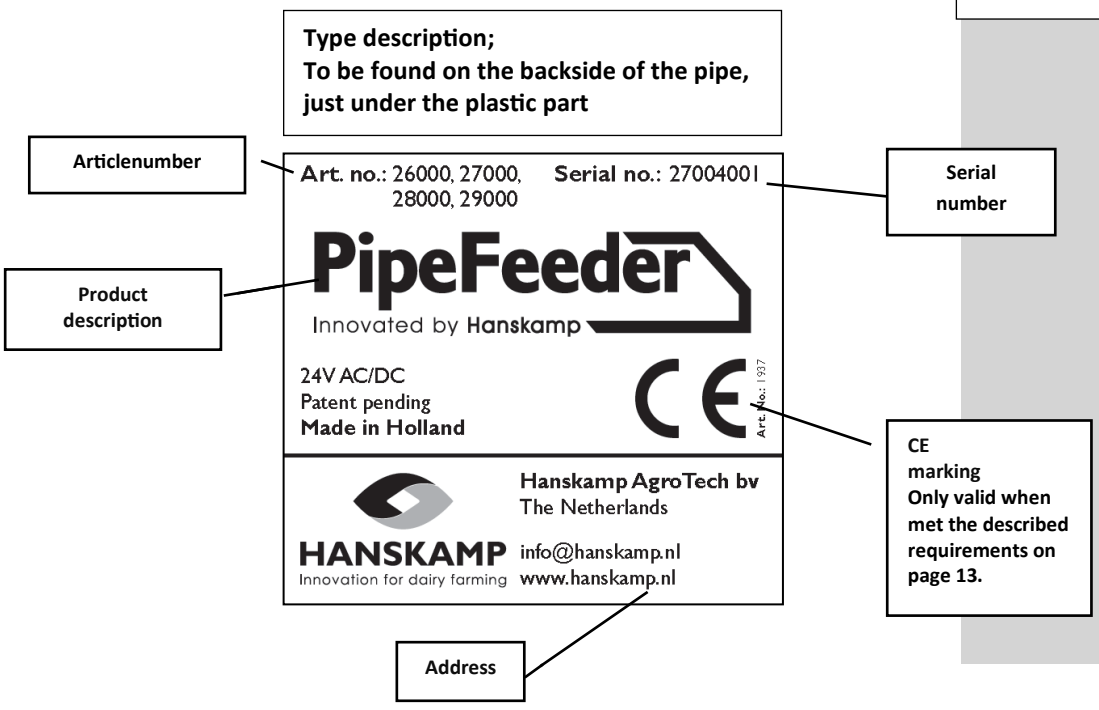

Installation:

1. The PipeFeeder is designed to be mounted on a wall. First of all ascertain where the PipeFeeder needs to hang and at what height. To do this, use the mounting holes in the assembly brackets provided for this purpose (item no. 001-902-000).
2. Before assembly, Grease the bolts and nuts with sufficient copper grease.
3. If the distance between the feeder and the dosing unit is too great we advise you to use a fall pipe fitted directly underneath the dosing unit. The PipeFeeder is designed to hang directly above the feed trough so that the fall height remains low so noise and dust are reduced. Also the PipeFeeder HighSpeed can be mounted, above a hopper. Sample installations can be found at www.hanskamp.nl/en

Please note! No mounting material is supplied to mount the PipeFeeder to the wall.

Please note! Always allow ±10 till 15cm of space under the PipeFeeder. This way air can run underneath the PipeFeeder.

4. Use a well-shielded electricity cable to connect the dosing unit.
   See the annex on page 15 for the connection diagram for the motor (24VDC, 120 rpm). The motor turns counterclockwise as standard.

Please note! When assembling always first switch off the Electricity.

Please note! Make sure that there is always a plug or lockable switch placed between the PipeFeeder and the power supply so that power can be disconnected.

5. Using the supplied membrane grommet (item no. 001-947-000), fit the cable through the lid of the PipeFeeder. To do this, drill a hole (Ø 16 mm) at the desired position in the lid (pic,2A & 2B). Then connect the other end of the cable to the desired output of the control unit.
6. Make a solid and closed connection with the supply auger. The top connection of the PipeFeeder is Ø125mm. This fits a slide coupling socket of PVC or PP exactly across. Make sure to not allow water, moist or dirt in the stock of the PipeFeeder.

Please note! An insufficient seal with the supply auger can cause problems when operating the PipeFeeder.

2A

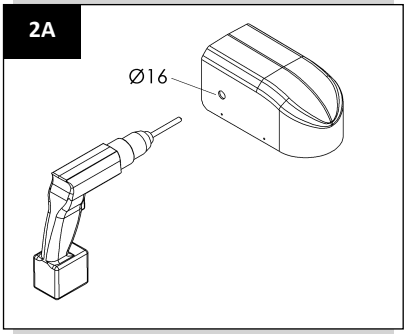

2B

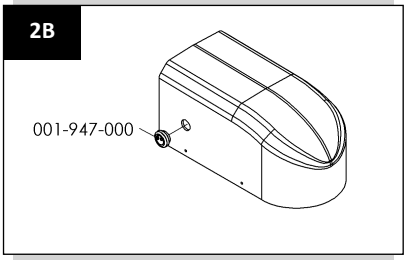

3

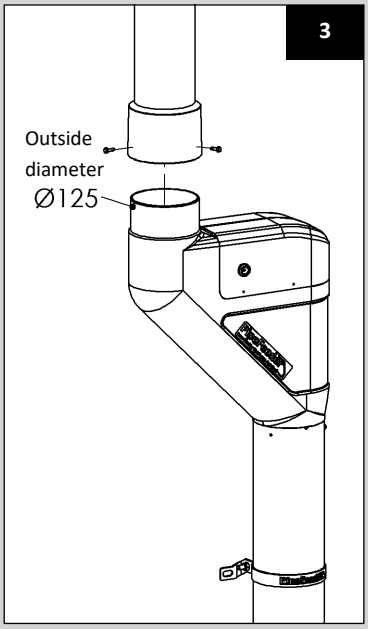

7. When installation is not completely correct the plastic part will be able to rotate freely with respect to the stainless steel tube. Make sure that after rotating the motor is placed correctly to the axis.



Important!

- Make sure that all the wires are neatly concealed out of reach of animals. Otherwise hazardous situations can emerge.
- Before you run the PipeFeeder, always fit the lid which covers the motor carefully. Otherwise hazardous situations can emerge (pic. 4).

8. The PipeFeeder has fully electrical operation. The motor drives the axis that turns a scoop mechanism at the bottom of the stainless steel pipe (Ø129 x 2mm). This mechanism delivers the feed. If a switch is used to control several dosing units at the same time, or on the MotorController, then several PipeFeeder dosing units can be connected to a single feeding line. Please note the maximum permissible current, which is stated on the power supply (art.nr. 002-812-000 or 002-813-000 PowerUnit), won't be exceeded.

Calibration

9. The PipeFeeder is calibrated by allowing the feeding computer to emit a pulse ten times. You then weigh the issued feed, divide this by 10 and enter this value into the feeding computer. Repeat this procedure every month and also after changing the feed type.

End assembly

1. After the assembly the PipeFeeder HighSpeed has to be covered by shields. Because all the different situations, the Installer has to take care of this.
2. When the covers aren't installed, the machine isn't safe and doesn't meet the issued declaration of conformity.
3. The mounted protection shields must satisfy the European standards and guidelines set.

Important!

- The PipeFeeder is only intended for cylindrical concentrate with a diameter of Ø4 to Ø6 mm. The manufacturer cannot guarantee proper functioning for other shapes or dimensions.
- During the installation of the PipeFeeder ensure the pressure of the concentrate on the dosing unit is greater than 50kg.
- Never insert your hand into the bottom of the PipeFeeder when it is still in operation or is connected to the electrical power supply (pic. 5).The size of the exit point is limited by a bar to prevent cuts.
- The PipeFeeder HighSpeed should be shielded, so that the dosing system is unreachable. This separation should meet European standards and guidelines. Without this separation the PipeFeeder HighSpeed doesn't meet the safety requirements of Hanskamp. If the PipeFeeder doesn't meet the safety requirements, there can not be derived any rights.

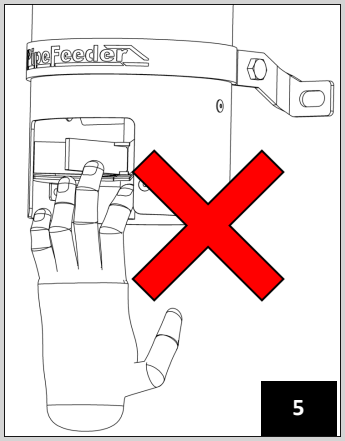

Maintenance

1. Check the PipeFeeder installation daily for faults and wear. Do this by means of a control test on the feed motors. Make sure that the vibrations and noise caused by the PipeFeeder are reduced as much as possible
2. If the PipeFeeder needs maintenance and is connected to the controls ensure that the PipeFeeder cannot start unexpectedly. Make sure there is no voltage on the installation! To do this plug the power supply off at the control unit of the dosing motor.
3. It is recommended to have repairs and maintenance carried out by a specialist.
4. To avoid electric shocks or getting trapped in the feed auger never open the housing and don't remove the shields when the PipeFeeder is still running.
5. For the safety of all concerned the user/owner of the PipeFeeder should follow the advice and directions given in the installation instructions. If it is not possible to follow this it is the responsibility of the user and the manufacturer cannot be held responsible/liable for any injury or damage to or by the product.

Please note! In case of maintenance make sure to always first switch off the electricity of the installation.

Cleaning

Clean the PipeFeeder regularly with a moist cloth. Do not spray water under the hood or in the stock pipe. To guarantee the equipment functions correctly make sure the exit point is clean and stays clean.

Please note! Do not spray with high pressure in or on the PipeFeeder. This can cause blockage.



001-976-000 ban sticker:
Forbidden to spray with water.

Disassembly

In case of disassembly all parts must be separated by material type for processing through a suitable waste management system.

Please note! In case of disassembly always switch off the electrical voltage of the installation.

Warranty limitations

The warranty excludes costs and expenses due to:

- incorrect use of the equipment, not in accordance with the specifications in the instructions for installation and use;
- the consequences of any interventions by engineers other than engineers recognised and approved by Hanskamp for carrying out service, maintenance and other technical work;
- incidents such as freezing, ice, fire, flooding, inundation or any other form of extreme water damage, and lightening;
- defects in the electrical system or earthing system;
- damage to the electrical system caused by vermin and so forth.

The warranty is not applicable to consequential damage that is not related to the feed station itself. All systems have been tested. However, in the event of faults, Hanskamp cannot be held responsible for consequential damage.

List of included amendments in these installation and operating instruction:

Nr.	Release date	Chapter(s)	Comments
1.0	06/2014	All	First release
1.1	08/2014	All	New name and logo added
1.2	03/2015	All	New address
1.3	10/2015	All	General inspection
2.0	2/2017	All	Pictures changed

Copyright and disclaimer

The information given in this publication is provided for information purposes only and does not constitute an offer for sale. The products supplied may differ from those illustrated. No part of this publication may be reproduced or made public without prior permission in writing from Hanskamp AgroTech BV. Although this publication was put together with the utmost care, Hanskamp AgroTech is not liable for any damage that might arise due to errors or gaps in this publication.

The instructions for installation and use in Dutch are the original instructions for installation and use. The translations into other languages have used the Dutch instructions for installation and use as the source document. Hanskamp AgroTech does not accept any liability for differences between the translations. If there are doubts about the content and accuracy of the translated instructions for installation and use, the Dutch instructions for installation and use constitute the authoritative document.

Declaration for completed machinery IIA
(According to annex VIIA of the Machinery Directive 2006/42/EC, for completed machinery)

We,
Hanskamp AgroTech BV
Broekstraat 17
7009 ZB Doetinchem
The Netherlands

Authorised compiler(s) of the technical file:

H.J. Hanskamp

Declare entirely under our own responsibility that the product:

029-000-000 PipeFeeder HighSpeed
Dosator for concentrate supply for dairy cattle

to which the declaration relates, fully complies with the provisions of the following directive(s):

Machine Directive 2006/42/EC

and completely or partially meets the following essential requirements and that the relevant technical documents were drawn up in accordance with **annex VIIA**. The product also complies with the stipulations in the following annex(es):

NEN-EN-ISO 12100_210
NEN-EN-ISO 13857
NEN-EN 349
NEN-EN-IEC 60204-1

We call your attention to the fact where the PipeFeeder has not been installed or has not been installed in accordance with safety measures in these installation and operating instructions this declaration of stipulations is null and void and so no rights can be derived from this declaration.

The Netherlands, Doetinchem 26-10-2015 H.J. Hanskamp



4. FAQ

Occuring problem	Possible cause	Solution
There is no feed.	No feed in stock pipe.	Check auger and silo.
	Motor is not controlled by the controller.	Check supply and control (voltage).
	Check if the rotor spins. Connection piece between the motor and drive-shaft could be broken.	Remove motor of rotor and reinsert
	Constipation by, for example wood or plastic.	Remove the PipeFeeder off the wall and shake it empty. The rotor can be rotated by hand when it is empty.
PipeFeeder doesn't distribute the proper amount.	Calibration is incorrect.	Calibrate the controller.

Annexes

Art. Nr.: 029-320-010

Productgroup:	Color:	Length:	Motor:	Rotation:	Version:
026 = PF Grit (10gr. Per rotation) 027 = PipeFeeder (80 gr. per rotation) 028 = PipeFeeder (35 gr. per rotation) 029 = PipeFeeder HighSpeed	1 = Black 2 = Green 3 = Blue 4 = Red 5 = Orange	0 = Extra short L= 821 mm 1 = Short L=1141 mm 2 = Normal (normale PF) L=1440 mm 3 = Long (FeedStation) L=1926 mm Length without extension tube =96,5mm shorter	0 = 001-631-000 24VDC 120rpm Motor 2 = ***-***-*** 24VAC/DC 28 rpm RIM 4 = 001-652-000 24VDC 28 rpm Intelligent 5 = 001-440-000 24VDC 41 rpm Motor gray 6 = 011-021-000 24VDC 28 rpm Solid State 5 8 = 001-001-000 24VDC 41 rpm Motor gray	1 = Right 2 = Left 3 = Front 4 = Back 5 = 45° Right 6 = 45° Left	0 = normal 4 = without extension tube

Example : Art.No.: 029-320-010 =

- A 1440mm normal blue *PipeFeeder* HighSpeed with motor 001-631-000 24VDC 120 Rpm, turned right, with extension tube

Technical data

24VDC Motor	
Input & Supply voltage	24VDC
Current, no load	0,5 A
Current, nominal	0,7 A
Electric motor	120 rpm
Capacity	20 kg/min
Content	ca. 20 liter (12kg.)(depending on the length)
Rotation direction of shaft	counterclockwise

For more information: www.hanskamp.nl/en

Schematically overview

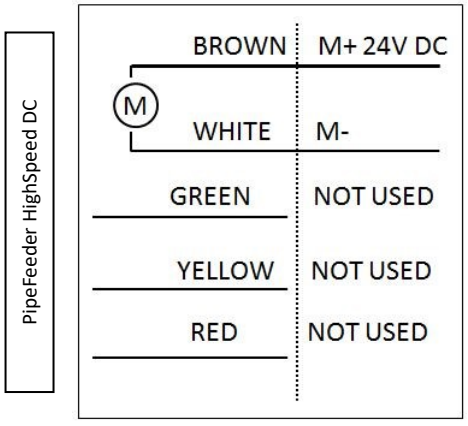

Loose components:
It is possible to reorder loose components from your supplier for maintenance, or for any other reason. Please use the item numbers shown below on the drawing.

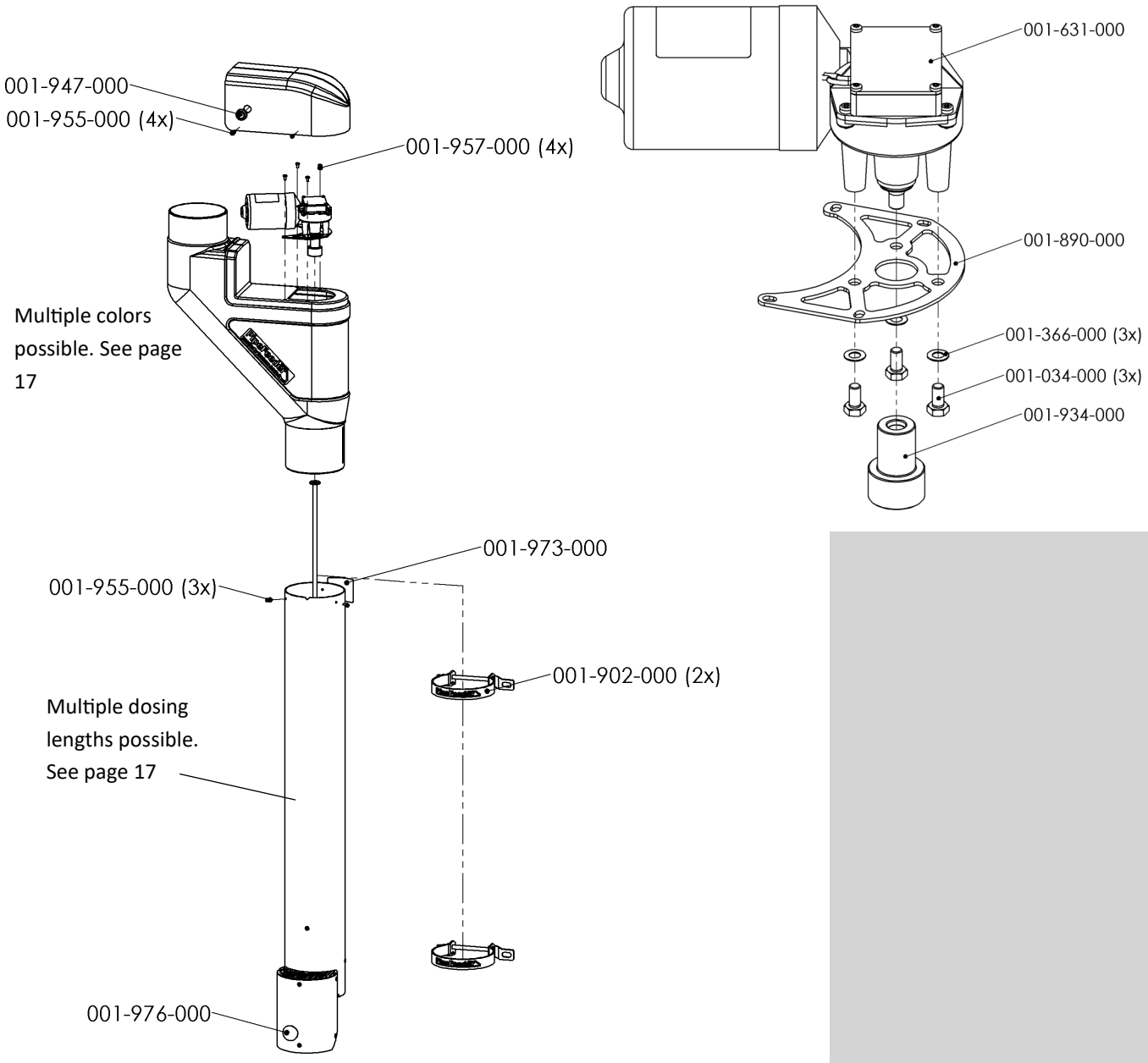

Description of the components

Art.No.:	Description	Qty,
001-034-000	Tap bolt M6x12 ad DIN 933	3
001-366-000	Spring Washer M6 a2 DIN 137B	3
001-631-000	Motor 120RPM 24VDC	1
001-890-000	Motor plate for DC motor	1
001-902-000	Wall mounting bracket Ø129 complete	2
001-934-000	Connector DC motor	1
001-947-000	Membrame grommet thermoplastic elastomer	1
001-955-000	Chipboardscrew 4x13mm a2	7
001-957-000	Tap bolt M4x8 a2	4
001-976-000	Ban sticker	1

Plastic element

Art.No.:	Description	Qty,
001-903-000	LLDPE/MDPE plastic element 45° with lid, Green	1
001-904-000	LLDPE/MDPE plastic element 45° with lid, Black	1
001-924-000	LLDPE/MDPE plastic element 45° with lid, Blue	1
001-925-000	LLDPE/MDPE plastic element 45° with lid, Red	1
002-024-000	LLDPE/MDPE plastic element 45° with lid, Orange	

Art.No.:	Description		Qty,
HighSpeed tubes with extension tube			
029-000-000	Extra short	*370mm*	1
029-010-000	Short	*690mm*	2
029-020-000	Normal	*990mm*	1
029-030-000	Long	*1475mm*	1
HighSpeed tubes without extension tube			
029-000-004	Extra short	*273,5mm*	1
029-010-004	Short	*593,5mm*	1
029-020-004	Normal	*893,5mm*	1
029-030-004	Long	*1378,5mm*	1

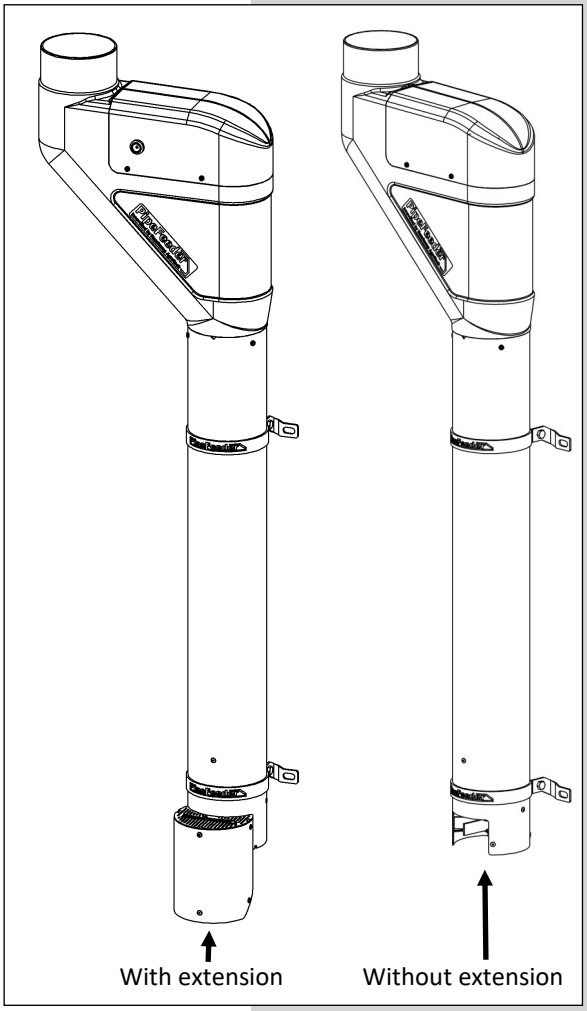

Installation dimensions:

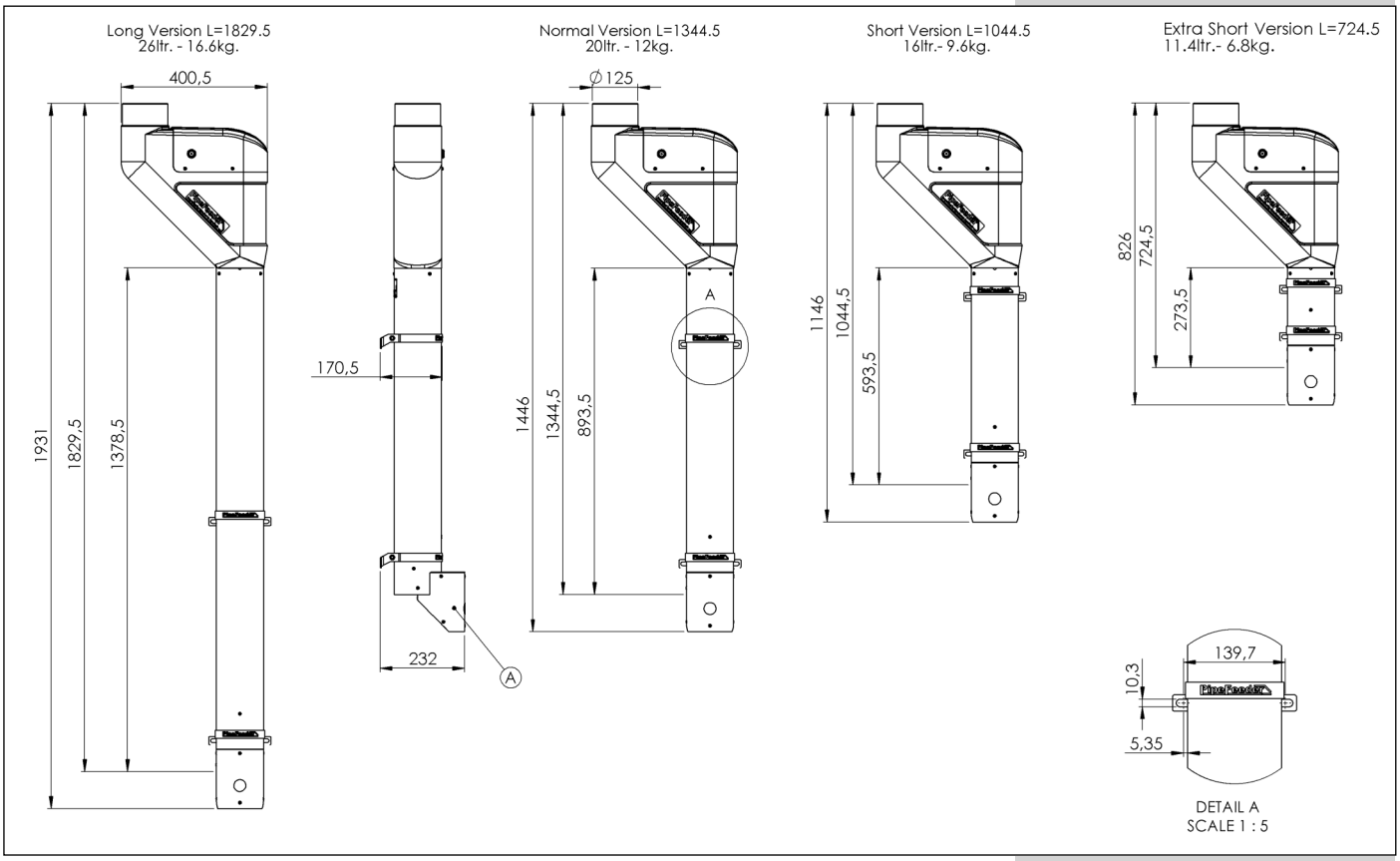

Hanskamp AgroTech B.V.
Broekstraat 17
7009 ZB Doetinchem
The Netherlands
Tel: +31 (0)314 - 393 797
Fax: +31 (0)314 - 393 826
www.hanskamp.nl/en

Visit us on: