# Extra mounting advice PipeFeeder

Good ventilation prevents blockages; read our extra installation advices. With every order there is an expanded installation instructions enclosed. The instructions is also available on www.hanskamp.nl/en. If you need help, please do not hesitate to contact us.

## The black plate need to rest on the bottom clamp







First mount the bottom clamp to the wall or FeedStation. Second lower the PipeFeeder in the clamp.

## Place the long side to the cow

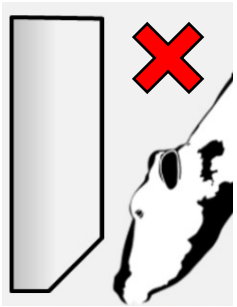

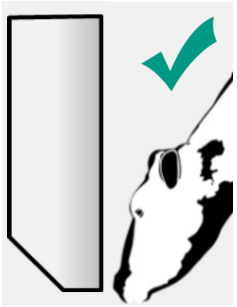

## Correctly configure your PipeFeeder's anti-spill

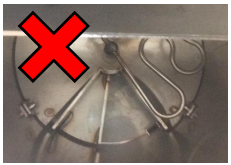



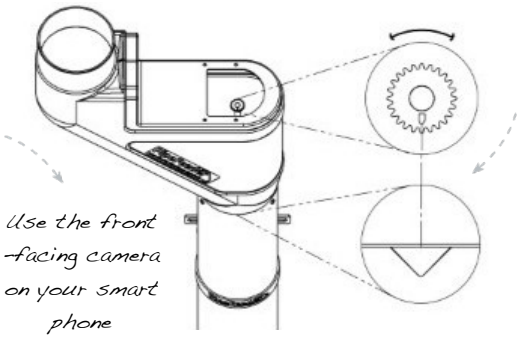


Rotate the axle to line up the triangular notch in the steel with the arrow on the motor's drive shaft.

## Use a gasketed PVC coupling

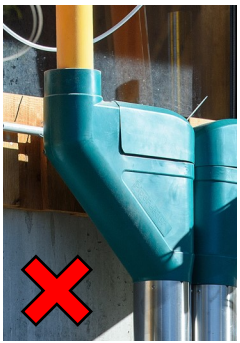



HANSKAMP
Innovation for dairy farming

info@hanskamp.nl
www.hanskamp.nl/en
+31 (0)314-393 797