MultiFrame

In parlour feeding

075-000-000

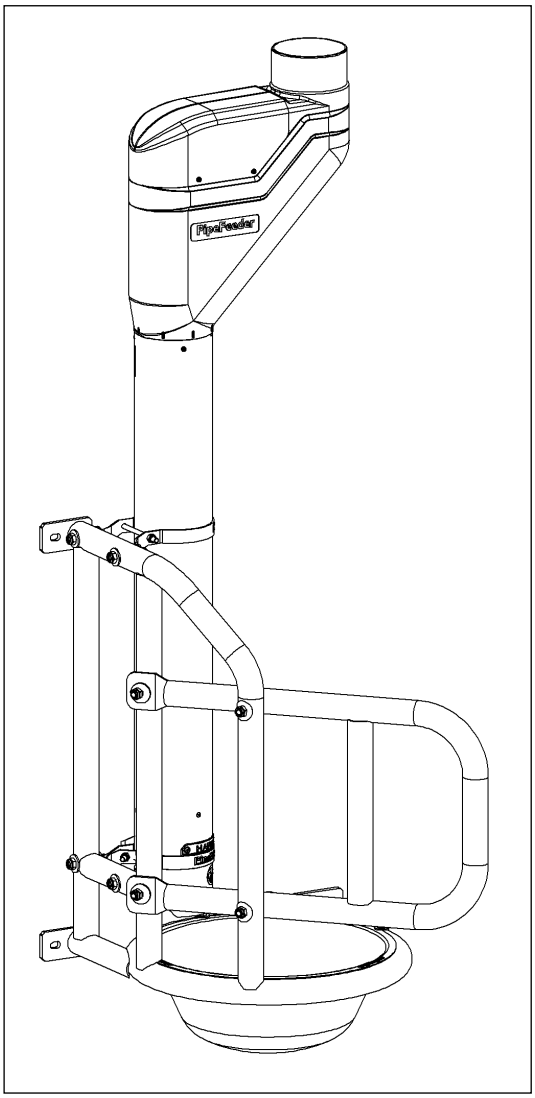

Installation and Operating Instructions **EN**

HANSKAMP
Innovation for dairy farming

Article number: 010-243-000

Date: September 2024
Version 2.0 - Translation of original instructions

Doetinchem,
The Netherlands
www.hanskamp.com

Mounting MultiFrame

1. First determine where the MultiFrame should hang. The distance between the MultiFrames depends on the type of milking parlour. The position measurements can be found in the drawing of the milking parlour (fig. 3).
2. Once the distance has been determined, the holes can be drilled according to the dimensions as shown in the drawing (fig. 1).
3. Then mount the MultiFrame on the wall. Mounting material is not included.

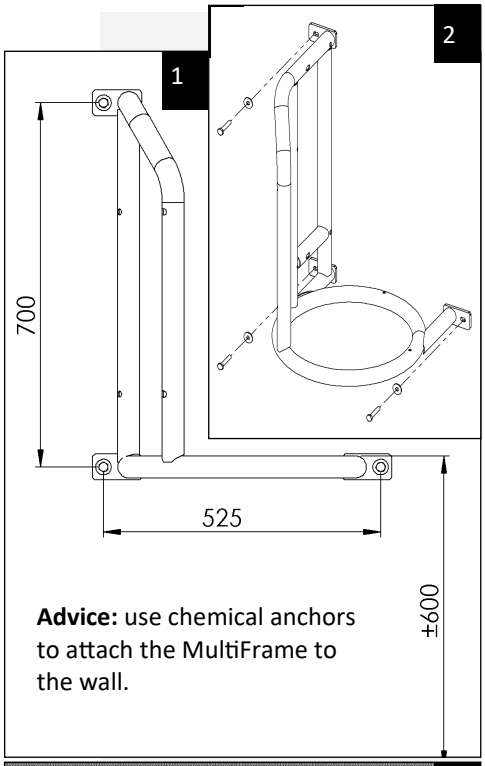

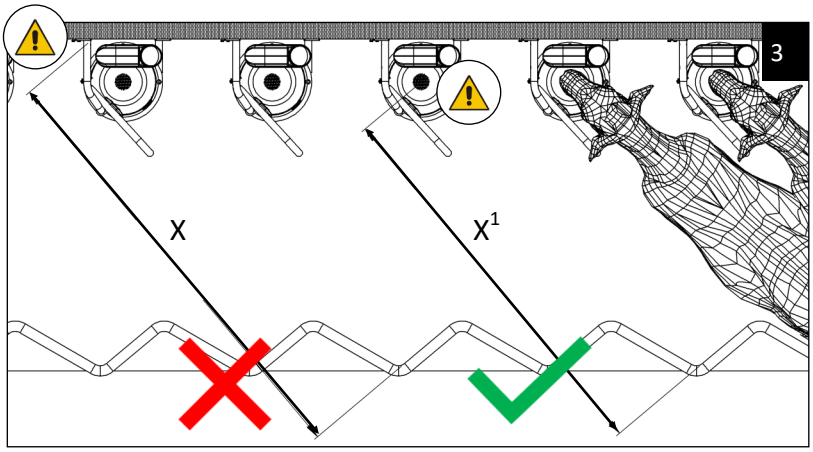

X^1 = depending on the size of the cow, measure this (total ± 2000 mm - ± 2400 mm).

= 2400 mm = 2000 mm

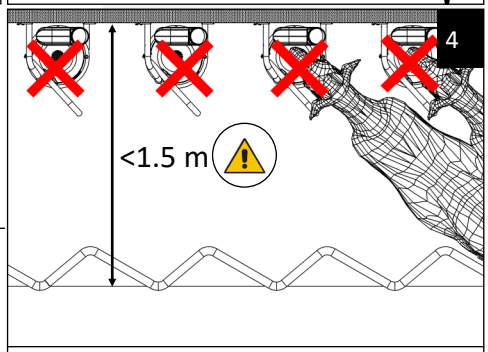

MultiFrame is not suitable for a stand width smaller than 1.5 m.

Mounting feed trough

1. Install the feed trough in the MultiFrame. The feed trough is easy to place in the frame by sliding it obliquely below the 2 vertical tubes which are welded to the ring. When the edge of the feed trough is placed under the vertical tubes, the feed trough can be placed on the ring. The feed trough is now secured on one side.
2. Secure now the other side of the feed trough with the supplied mounting material as shown in figure 5.

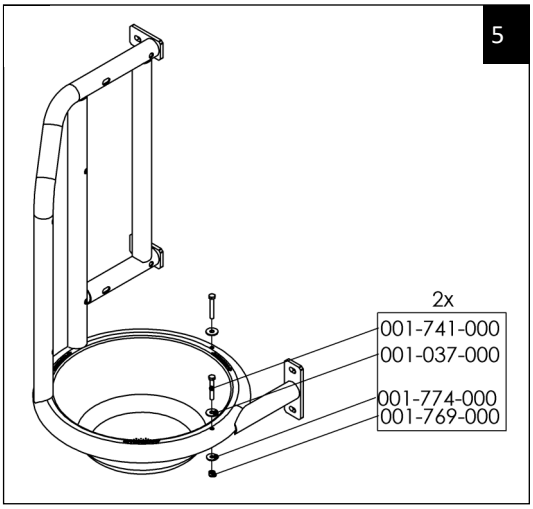

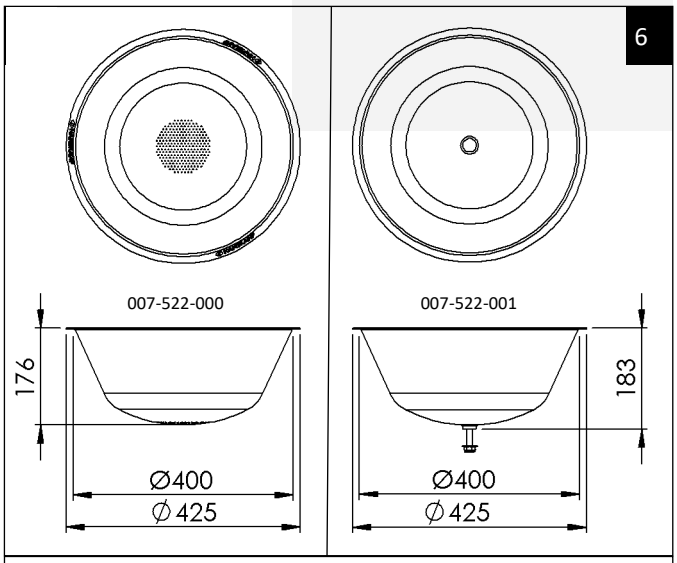

There are two types of feed troughs available:
The perforated feed trough (art. no. 007-522-000) and the traditional feed trough with 1 hole (art. no. 007-522-001).

Mounting PipeFeeder

1. Mount the PipeFeeder to the MultiFrame with included mounting materials as shown in figure 7.
2. Make sure the bottom of the PipeFeeder is level with the top of the feed trough.
3. In order for the PipeFeeder to dose nicely into the feed trough, it advisable to rotate the PipeFeeder tube 45° so that the dosing unit hangs above the feed trough.

Please note! If the stainless steel pipe of the PipeFeeder is rotated in relation to the plastic part, care must be taken to re-adjust the PipeFeeder to maintain the anti-spill function. To adjust the PipeFeeder, see manual 001-847-000.
If the PipeFeeder does not fit the frame due to a truss construction, etc. gets in the way, the PipeFeeder can also be mounted on the wall. The distance between the wall and the PipeFeeder remains the same compared to mounting on the MultiFrame. This ensures that all PipeFeeders are attached in a straight line and that the parlour look sleek.

7

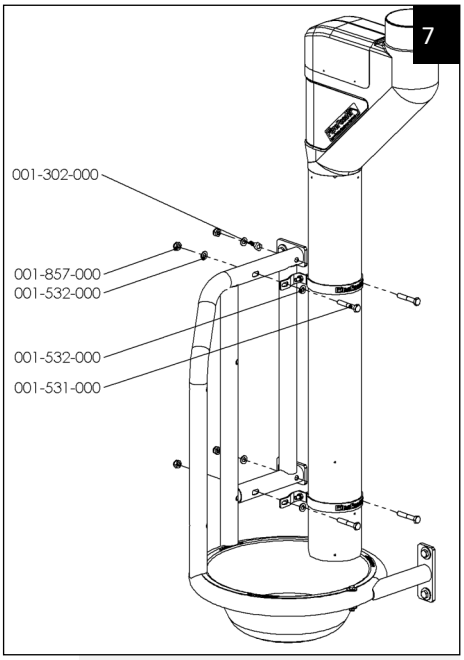

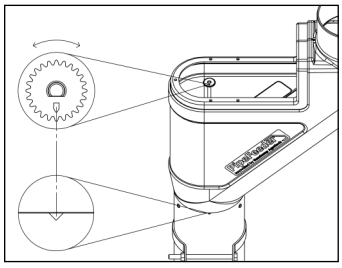

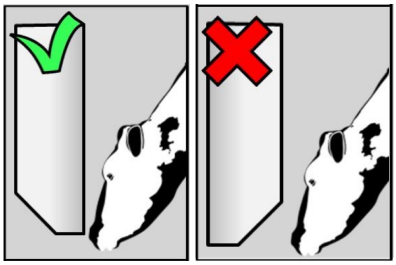

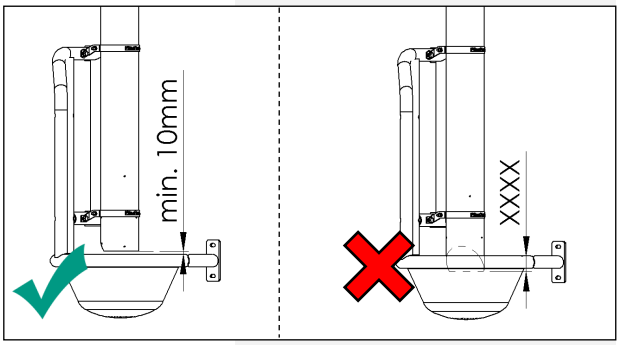

MultiFrame degree positions

The MultiFrame for 30° positions concerns the complete frame as described above. This frame is supplied without a side fence. In 40°, 50° & 60° milking parlours the frame can be fitted with a short side fence (art. no. 007-504-000). In 70° & 80° parlours the MultiFrame can be fitted with a long side fence (art. no. 007-505-000).

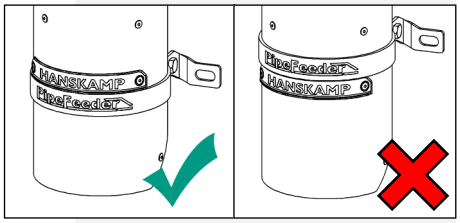

8

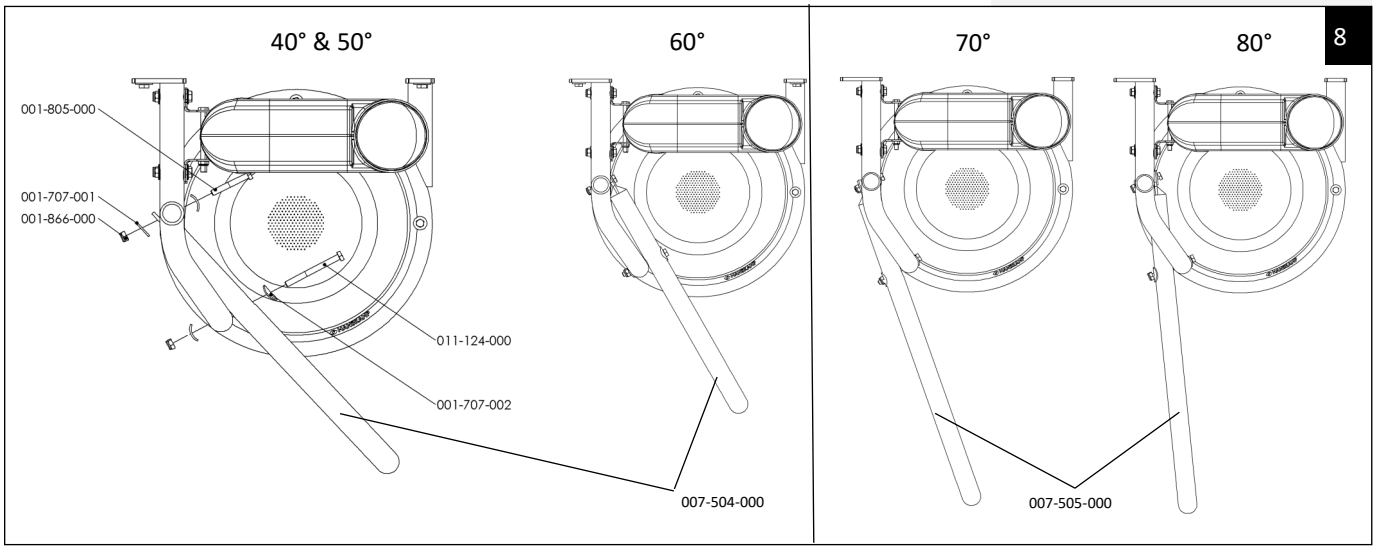

Annex: Right / Left

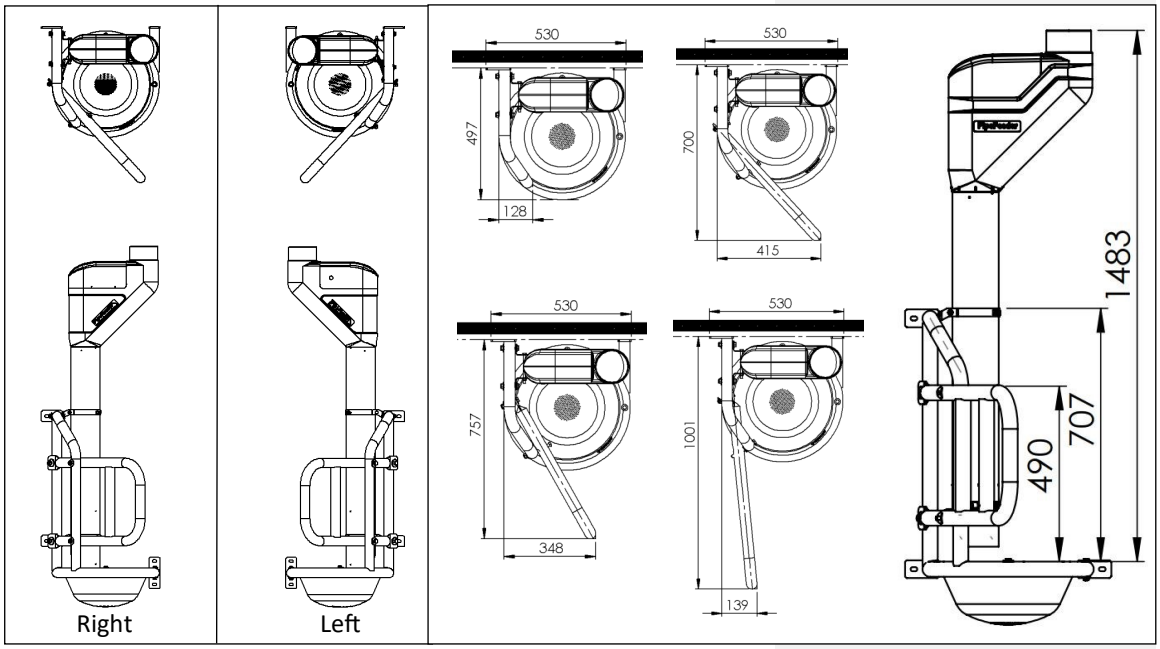

Grounding MultiFrame

It is recommended to ground all MultiFrames. A tube cable lug (art. no. 001-302-000) is included to ground the MultiFrame. This can be mounted between any bolt and nut.

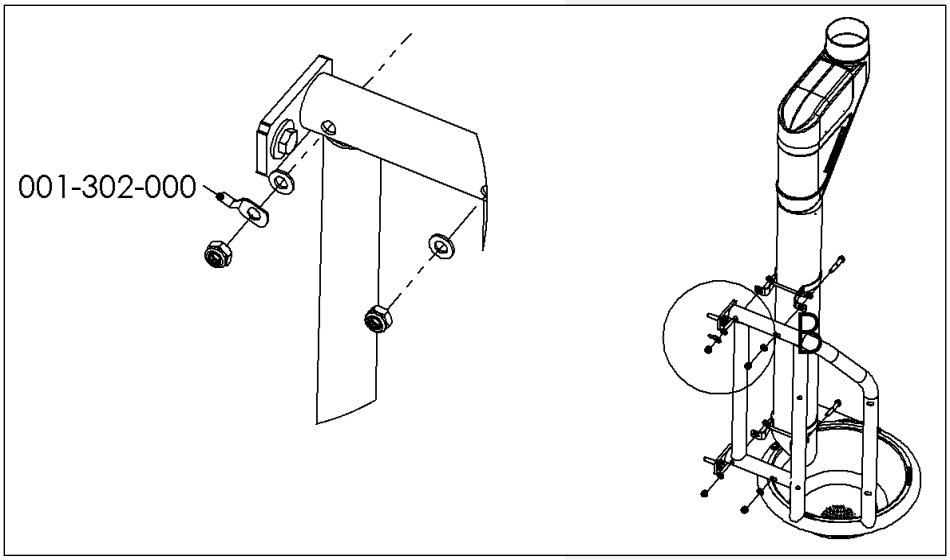

Maintenance MultiFrame

Clean the feed trough regularly and make sure the feed trough stays clean. Let the water out of the feed trough after cleaning it.

Mounting Reader/Antenna support (individual stall recognition)

Various antenna supports can be mounted on the MultiFrame. Antenna support art. no. 007-524-000 is suitable for DeLaval antennas. Antenna support art. no. 007-525-000 is suitable for Hanskamp, Nedap and Fullwood antennas (fig. 9). The mounting of art. no. 007-525-000 is shown in figures 10-13. Antenna support art. no. 007-524-000 can be mounted in the same way.

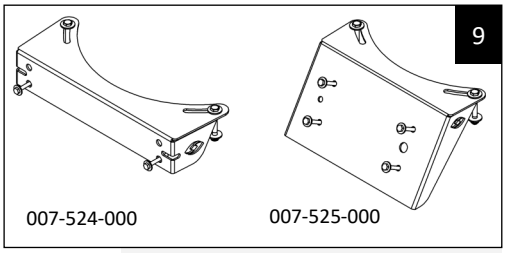

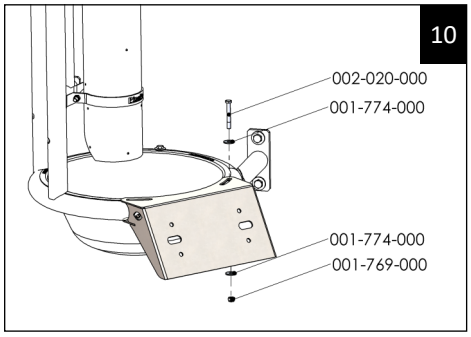

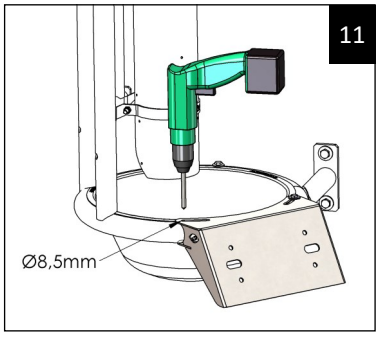

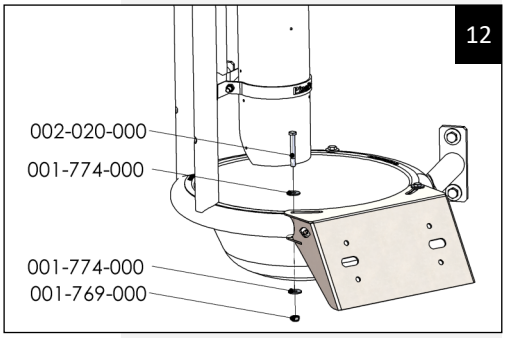

To shield the antenna cable, a cable guide tube can be placed (see fig. 14-16). This is available as a set from Hanskamp: art. no. 007-530-000 for neck collar tag readers and art. no. 007-531-000 for leg tag readers.

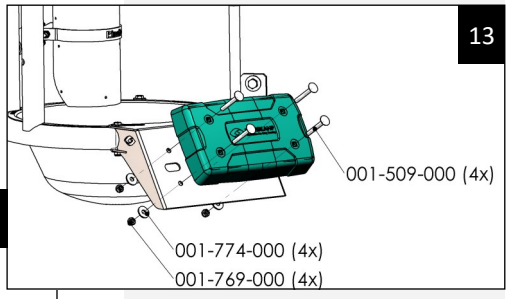

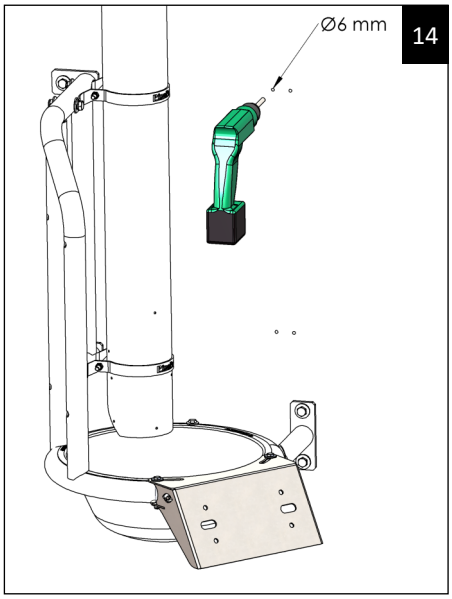

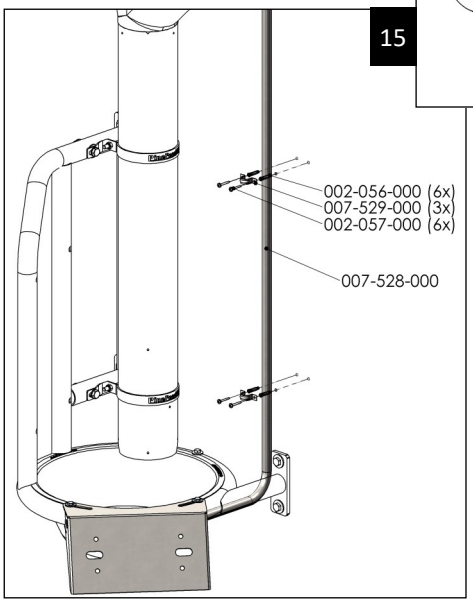

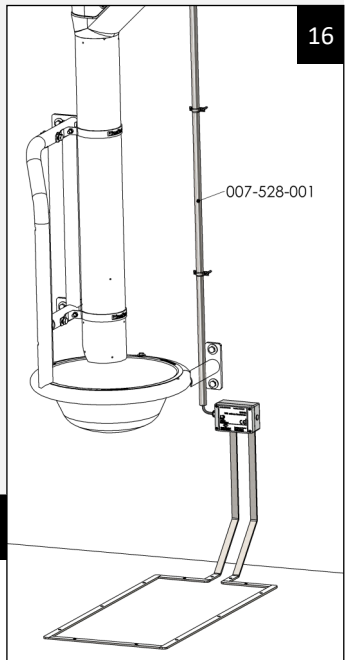

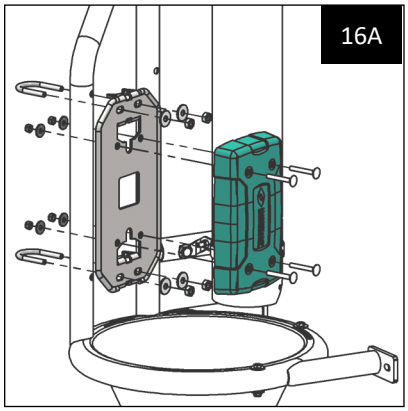

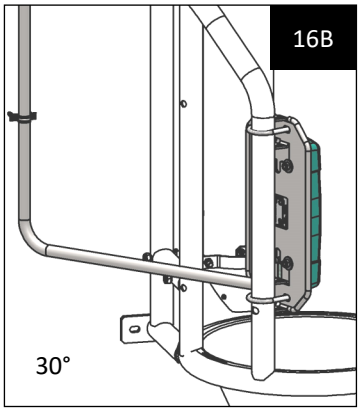

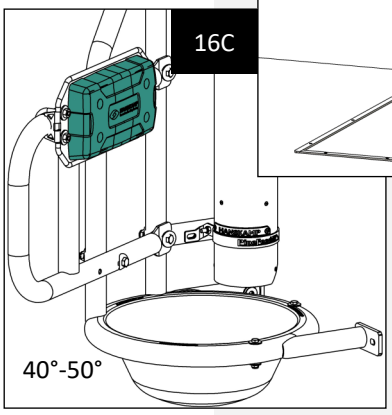

Options:

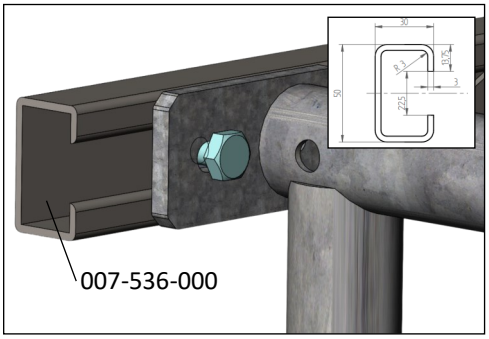

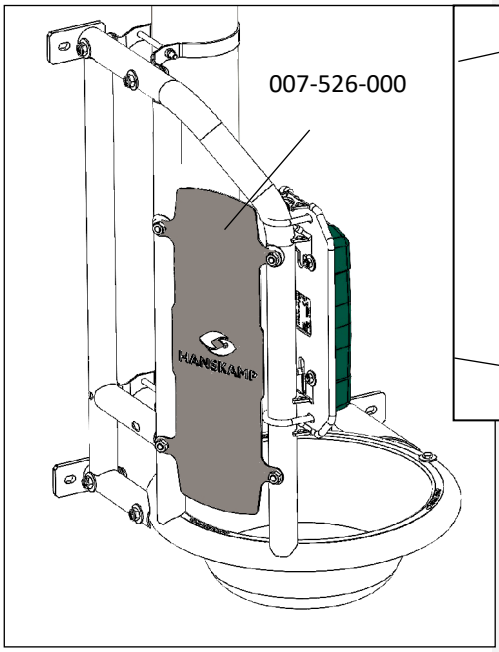

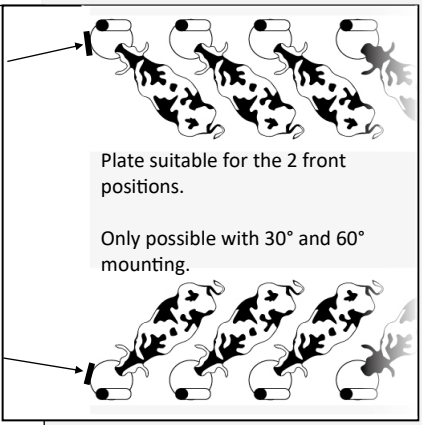

Rail system	
Art. no.	**Description**
007-536-000	Rail 50x30x3 l=2000 for mounting MultiFrame
007-538-000	Set of mounting material for PF clamp 011-102-000 on rail
007-540-000	Set of mounting material for MultiFrame on rail

List of amendments included in this installation and operation manual			
No.	**Release date**	**Chapter(s)**	**Comments**
1.0	01/2016		First edition
1.1	02/2016	Attachment & Article structure	Article names are changed & grounding added
1.2	01/2017	Attachment	FAQ added
1.3	01/2018	Mounting	Picture PF to low added
1.4	01/2018	Antenna mounting	Added antenna mounting instructions
1.5	06/2019	Front page, images 1 & 2	Changed to most recent version MultiFrame
1.6	03/2020	Page 2 and 4	Image added page 2, comment added page 4
1.7	09/2021	Page 2, 5 and 6	Page 2: 2400 was 2300, page 5: 16.C added Page 6: added plate option
1.8	09/2023	Page 2	Image inserted. Note added: MultiFrame is not suitable for a stand width smaller than 1.5 m.
1.9	05/2024	Page 2	Advice added: use chemical anchors to fix the MultiFrame to the wall.
2.0	09/2024	Page 6	Rail system images and article numbers added.

FAQ		
Problem	**Possible cause**	**Solution**
Side fence does not fit, mounting holes do not match.	Fence is positioned the wrong way.	Turn fence 180° and try again.
No mounting for stand-place recognition.	No antenna mounting plate ordered or delivered.	Order for a DeLaval antenna: art. no. 007-524-000. Order for a Hanskamp, Nedap or Fullwood antenna: art. no. 007-525-000.

MultiFrame parts

Art. no.	Description	Quantity
007-501-000	MultiFrame right	1
007-502-000	MultiFrame left	1
007-504-000	Side fence short	1
007-505-000	Side fence long	1

Type feed trough

Art. no.	Description	Quantity
007-522-000	Perforated feed trough	1
007-522-001	Feed trough with hole Ø20	1

007-506-000 Mounting material

Art. no.	Description	Quantity
001-037-000	Washer M8 r9.0 A2 DIN440R	2
001-302-000	Tube cable lug M10 4.5 mm²	1
001-382-000	Mini grip packaging sachets 100x150 mm	1
001-531-000	Bolt M10x60 DIN931 A2	4
001-532-000	Washer M10 A2 DIN125/ A1	8
001-707-001	Washer M10x34x3 DIN440 8.8ev	2
001-707-002	Curved washer M10x34x3 DIN440 8.8ev	6
001-741-000	Bolt M8x55 A2 DIN933	2
001-769-000	Slotted retaining nut M8 A2 DIN985 coat	2
001-774-000	Washer M8 DIN 9021 A2	2
001-805-000	Bolt M10x70 DIN 931 8.8ev	2
001-857-000	Slotted retaining M10 A2 DIN 985 coat GL	4
001-866-000	Slotted retaining nut M10 DIN 985 8.8ev	4
011-124-000	Bolt M10x105 DIN931 8.8ev	2

Antenna support incl. mounting material

Art. no.	Description	Quantity
007-524-000	Support for Reader 3 mm incl. (DeLaval)	1
007-525-000	Support for Antenna 3 mm AISI304 (Hanskamp, Nedap, Fullwood)	1
007-530-000	Cable guide tube set (Neck collar antenna)	1
007-531-000	Cable guide tube set (Leg tag antenna)	1

Hanskamp AgroTech BV
Broekstraat 17
7009 ZB Doetinchem
The Netherlands
Tel: +31 (0)314 - 393 797
Fax: +31 (0)314 - 393 826
info@hanskamp.nl
www.hanskamp.com

Also take a look at: