MultiFill

The self-priming pump for automatically filling liquids from the storage container to the MultiDos container

" MultiFill take care of filling the MultiDos container again"



- Automatic because of float valve
- Userfriendly
- For one or more MultiDos systems
- Plug and Play installation

HANSKAMP
Innovation for dairy farming

info@hanskamp.nl
www.hanskamp.nl/en

MultiFill

The self-priming pump for automatically filling liquids from the storage container to the MultiDos container

MultiFill takes care of your work

All you do is check whether the large storage is not yet empty. You no longer have to carry large jerrycans and fill the MultiDos manual on top of the concentrate feeding station or milking robot. The MultiFill ensures for greater convenience in use and automatically refills the containers of your MultiDos.

How does it work

The MultiFill consists of a self-priming 230V electric pump. A float is installed in the MultiDos container. When the liquid in the MultiDos container is below a certain low level, the MultiFill will begin to run. By means of a flexible transparent hose, the liquid is automatically pumped from the storage container to the MultiDos container (max. 50m from the storage container). When the MultiDos container is full, the pressure switch ensures that the MultiFill is switched off, so that the MultiDos container does not spill over. No more worries!

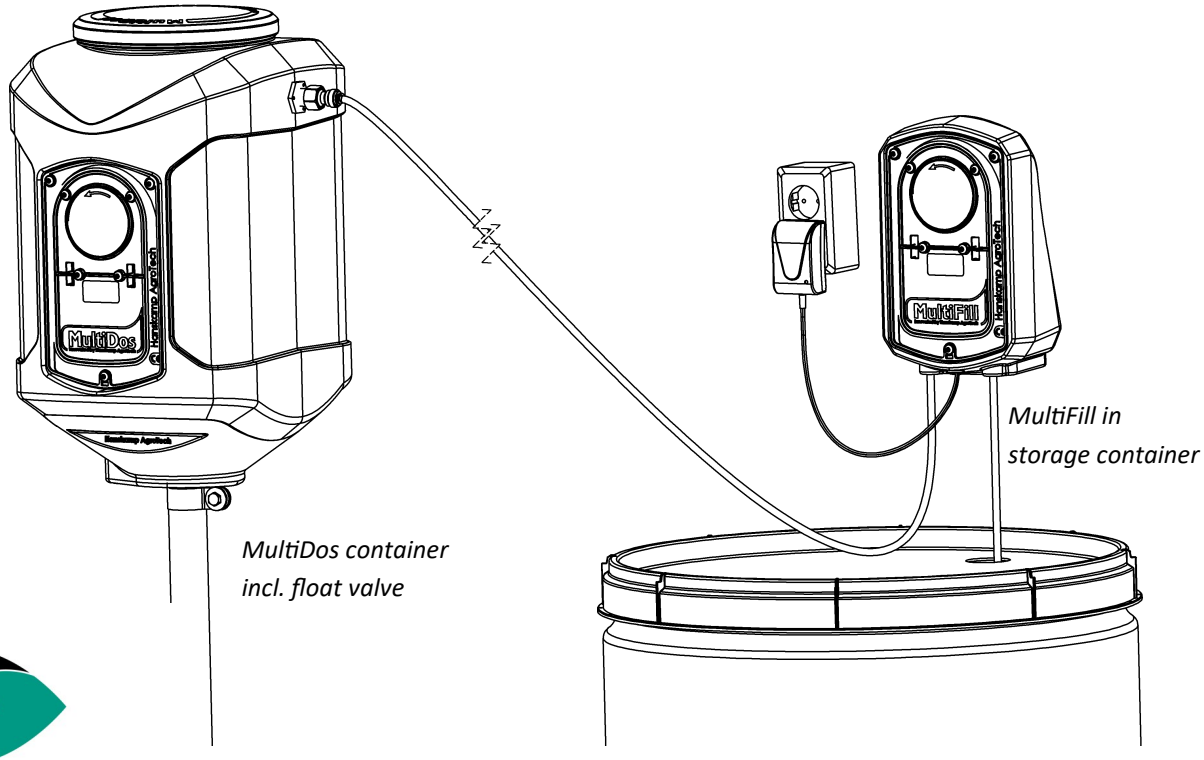

HANSKAMP
Innovation for dairy farming

info@hanskamp.nl
www.hanskamp.nl/en