MultiFill

003-561-005 up to 003-565-005

Liquid dosing system
Vloeistofdoseersysteem
Flüssigkeitsdosiersystem
Système de dosage pour liquide



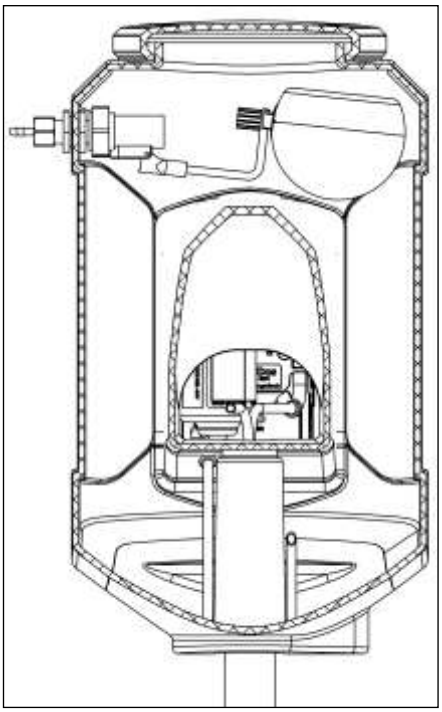

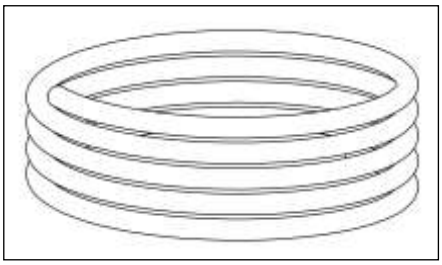

Installation and Operating Instructions **EN**

HANSKAMP
Innovation for dairy farming

Article number: 010-106-000

Date: December 2023
Version 2.8 - Adjusted instruction manual
According to Annex IIA of the Machinery Directive 2006/42/EC for completed machinery

Doetinchem,
The Netherlands
www.hanskamp.com

Foreword

Contents of the installation and operating instructions

This manual contains the information necessary for the correct installation and operation of the MultiFill dosing system. Study and understand this information thoroughly before configuration of the MultiFill. Failure to do so could result in damage to equipment. Please consult your milking equipment dealer if you do not understand the information in this manual, or if you need additional information.

All information in this manual has been compiled with care. Hanskamp shall not be liable for errors or faults in this manual. The recommendations are meant to serve as guidelines. All instructions, pictures and specifications in this manual are based on the latest information that was available at the time of publication. Your MultiFill may comprise improvements, features or options that are not covered in this manual.

Applicability

The table below shows the type numbers of the MultiFill to which this manual applies.

Model designation

Model	Model number
MultiFill	003-561-005 up to 003-565-005

Contact number of milking technology dealer

We recommend that you enter the name, phone number and e-mail of your milking technology dealer in the table below, so that you can always find the right information easily.

Name	
Address	
Phone number	
E-mail	

1. Introduction

The MultiFill automatic filling system for MultiDos storage drums consists of a self-priming electric pump (230 V), a flexible transparent hose, and a float. This threepart set enables the transport of liquids from a larger storage drum to any place in the barn, where the MultiDos storage drums are situated. Installation is simple and quick. The MultiFill pump simply needs to be connected to the MultiDos storage drums and a wall outlet.

The information in this manual is intended for dairy farmers and technicians.

- Dairy farmers can use the information to test and adjust the MultiFill.
- Technicians can use the information to install and set up the MultiFill.

2. Safety

2.1 Introduction

The 'Safety Warning' symbol warns about important safety messages on your MultiDos and in the manual. Use caution if you see this symbol; it means there is a risk of personal injury or death. Follow the directions of any safety messages.



Safety Warning Symbol

2.2 Warning Texts

Note the use of the warnings **CAUTION** and **DANGER** in the safety messages. The following guidelines apply to these warnings:



Caution! Indicates a potentially hazardous situation which could result in minor personal injury or damage to equipment or the environment if the warning is ignored.



Danger! Indicates a potentially hazardous situation which could result in death or serious injury if ignored.

2.3 Safety Instructions

You are personally responsible for operating and maintaining your MultiFill safely. You must make sure that you and anyone else who operates the equipment, performs maintenance on the MultiFill or works in the vicinity of the MultiFill, are familiar with all the safety information in this manual.

Safety is in your hands. Proper safety measures protect you and the people around you. Incorporate these measures into your safety programme. Make sure that everyone who uses, carries out maintenance, or works in the vicinity of the MultiFill is aware of these safety measures. Do not risk injury or death by ignoring the safety precautions.

- MultiFill owners must train users before the MultiFill is used. This training must be repeated at least once a year.
- The user must read, understand and follow all the safety and operating instructions in the manual.
- Anybody who has not read and understood all the safety and operating instructions must not operate the MultiFill.
- Do not make any modifications to the equipment. Unauthorised modifications may affect operation, affect the service life of the equipment, and/or result in personal injury.
- Only use original spare parts, and make sure that they are fitted by authorised technicians.

2.3.1 General safety

- Make sure that you have read and understood the manual and the safety instructions before connecting the power supply to operate or adjust the MultiFill, or turning it off for maintenance.
- Only trained personnel may operate the MultiFill.
- Install all guards and safety devices before using the MultiFill.
- Wear proper protective clothing and equipment.
- Before cleaning the MultiFill or performing maintenance on it, switch off the power supply of the MultiFill by removing the plug from the socket.
- Make sure that phone numbers of emergency medical care available in your area are at hand.
- If you have any other questions, please contact your milking technology dealer.
- Review all safety-related topics with all users at least once a year.

2.3.2 Electrical safety

- Only a qualified electrician may install the MultiFill power supply.
- Check whether the earthing of the electrical system and all parts of the MultiFill comply with local rules and regulations.
- Replace any damaged electrical cables, cable sheaths, switches and parts immediately.
- Isolate or switch off the power supply before opening the MultiFill and working on the electrical system.

2.3.3 Safety during installation

- Make sure that you have read and understood the instructions in this manual.
- Check whether the MultiFill has been installed correctly, as described in the manual.

2.3.4 Safe operation

- Make sure that you have read and understood the manual and the safety instructions before connecting the power supply to operate or adjust the MultiFill, or turning it off for maintenance.
- Only trained personnel may operate the MultiFill.
- Before cleaning the MultiFill or performing maintenance on it, switch off the power supply of the MultiFill by removing the plug from the socket.
- Install the lid and other safety devices before using the MultiFill.
- Keep hands, feet, hair and clothing away from live parts.
- Keep all unauthorised persons, especially small children, away from the MultiFill at all times.
- Before connecting the MultiFill to the power supply, make sure that all parts are properly tightened and that all cables and mountings are in good condition.
- If you have any other questions, please contact your milking technology dealer.

2.3.5 Safety during maintenance

- Make sure that you have read and understood the manual and the safety instructions before connecting the power supply to operate or adjust the MultiFill, or turning it off for maintenance.
- Only trained personnel may service and maintain the MultiFill.
- Before cleaning the MultiFill or performing maintenance on it, switch off the power supply of the MultiFill by removing the plug from the socket.
- Wear protective clothing and safety glasses when working on the electrical system.
- Make sure all guards and safety devices are installed when you have finished maintenance work.

2.3.6 Safety messages

- This chapter lists the general safety messages. Specific safety messages, where potential hazards may arise if the procedures or instructions are not followed, are included in the appropriate sections of this manual.

3. Installation instruction

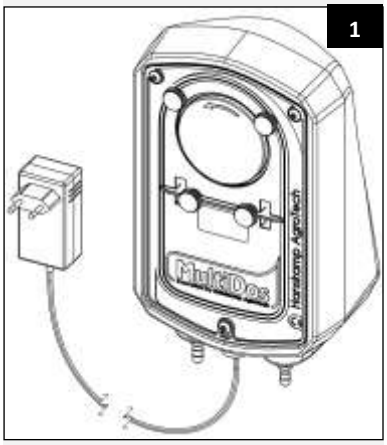

General description
The Hanskamp MultiFill dosing system is a refill system for automatically filling the MultiDos container. This installation instruction will guide you through the installation of the MultiFill system (fig. 1). Read this instruction carefully and follow the safety instructions. Examples of installation can be found at www.hanskamp.com.

Order numbers and names of accessories can be found in the attachment.

Transport and storage
The MultiFill dosing system set consists of a MultiFill wall mount with one float valve set per MultiDos container. The MultiFill is packed in a cardboard box. These boxes can be stacked on a pallet. The boxes may be shipped separately. For box content, see annex 3, page 17.

Caution! Always use an appropriate vehicle (forklift truck, pallet fork, pump truck, etc.) to move the pallet.

Caution! Parts may fall off the pallet when it is being unpacked.

Safety
The user and installer are responsible for operating and maintaining the MultiFill dosing system safely. When changing the HanskampQualityTube of the pump, always disconnect the electric system, in order to prevent entrapment of the fingers.

Type description; can be found on the control box

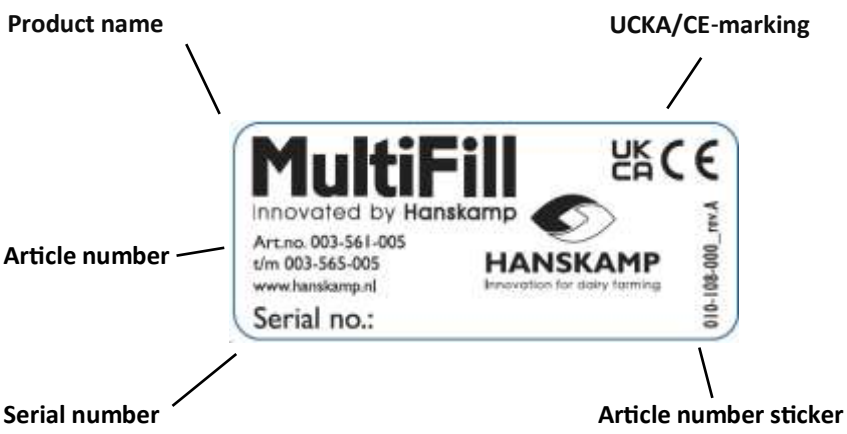

Caution: the stickers present may not be removed!

Maintaining stickers
- Keep safety stickers clean and legible.
- Clean safety stickers with soap and water.
- Do not use solvents or abrasives that could damage safety stickers.
- Replace missing or illegible safety stickers.
- Safety stickers are available from Hanskamp. Always use the article numbers in correspondence.

Installing the float in the MultiDos storage tank

1. Install the float on the float valve (fig. 2).
2. Drill a 22 mm hole, 440 mm from the bottom of the container (fig. 3 and 4).
3. Twist the first of the two plastic nuts off the float (fig. 5).
4. Insert the float valve set through the hole, fix the float with plastic nuts (fig. 7).
5. Screw the adaptor nipple (art. no. 001-170-001) tightly onto the float valve by hand (fig. 5).

Installing/connecting multiple drums

1. Connect the drums with the aid of the T-coupling (art. no. 001-178-000) (fig. 8).
2. Secure the tube with cable ties, preferably place the tube in a protective sleeve.

2

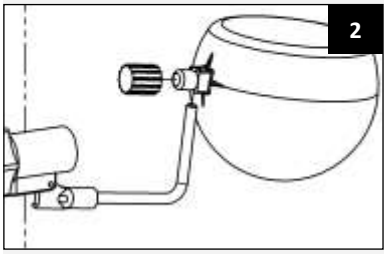

3



6

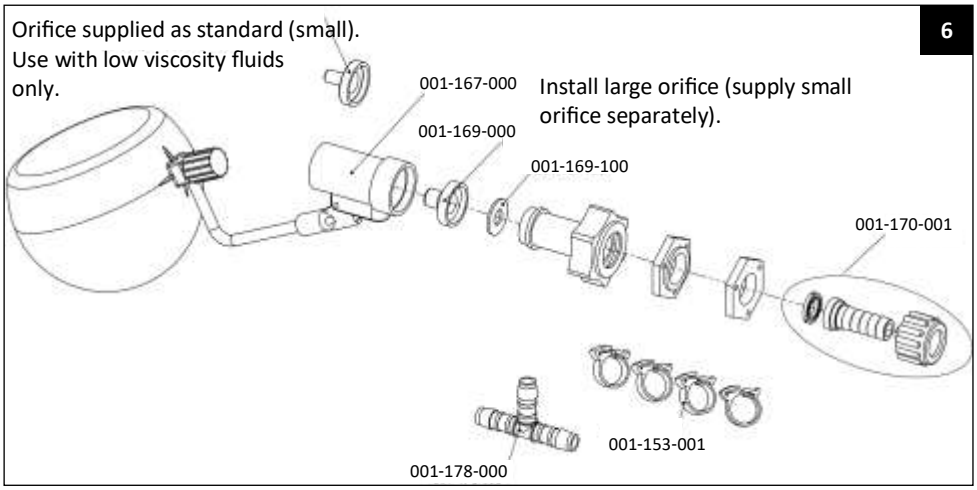

4

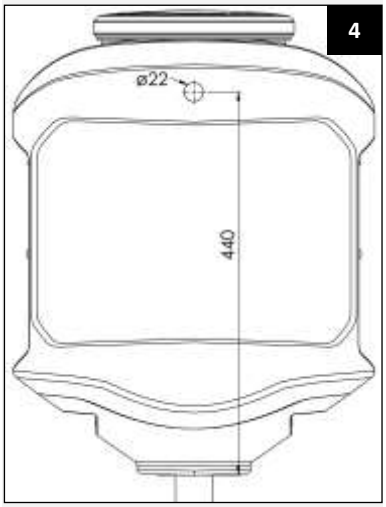

Caution! Make sure that the tube is not pinched when fixing it.

Caution! Drill a small hole into the top of the storage drum for ventilation purposes.

Caution! Fill the container completely by hand the first time. Let the MultiFill refill only the last millilitres.

7

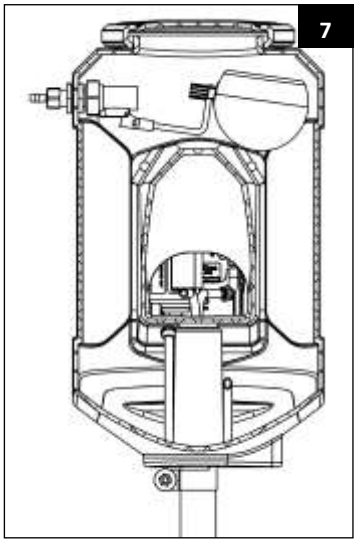

5

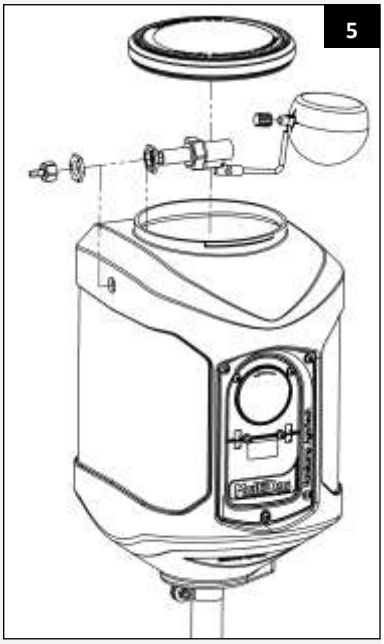

8

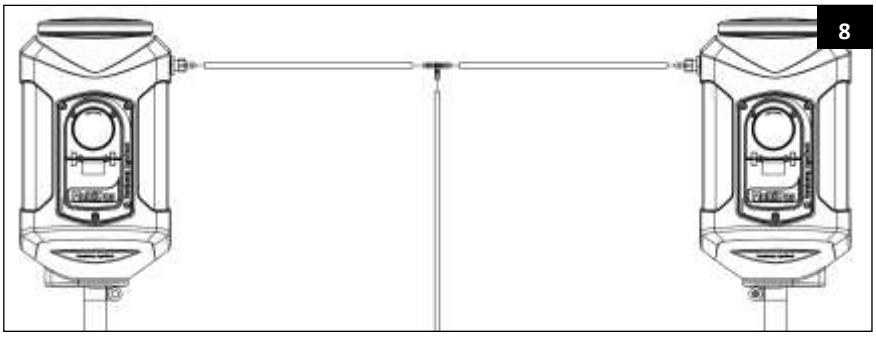

Mounting the MultiFill

1. Check parts for completeness with the help of the item list.
2. Loosen the outer three hexagon socket screws (art. no. 003-510-000) that attach the MultiFill pump to its housing and remove the pump.

Caution! The MultiFill should be placed near a power outlet.

The MultiFill can be attached in two different ways.

3a. To the wall:
Drill holes in the back of the MultiFill as shown in figure 9. The required distances of the holes are shown in figure 10. Install the wall mounting, about 20 cm above the storage container. The maximum suction length of the MultiFill is 2 meters. (Mounting material is not included.)

3b. To a surface:
Drill holes in the bottom of the MultiFill. The place of the holes can be chosen freely (see fig. 11 for minimum distance between the hoses and the plate). Install the wall mounting. The maximum suction length of the MultiFill is 2 meters. (Mounting material is not included.)

4. Unscrew the cover of the pump housing (fig. 12).
5. Pinch a hole into the centre grommet, using a small, flat screwdriver.
6. Carefully open the cover of the motor housing.
7. Push the cable of the power supply through the centre grommet.
8. Strip the insulation at the ends of the wires.

9

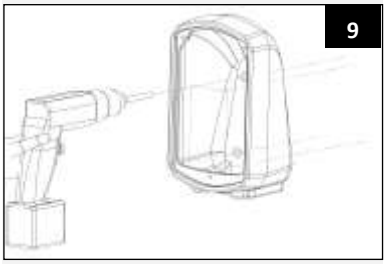

10

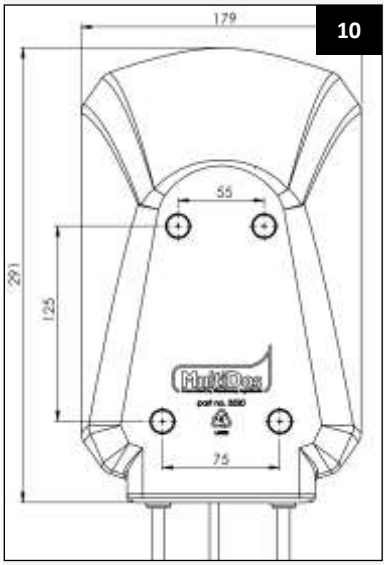

11

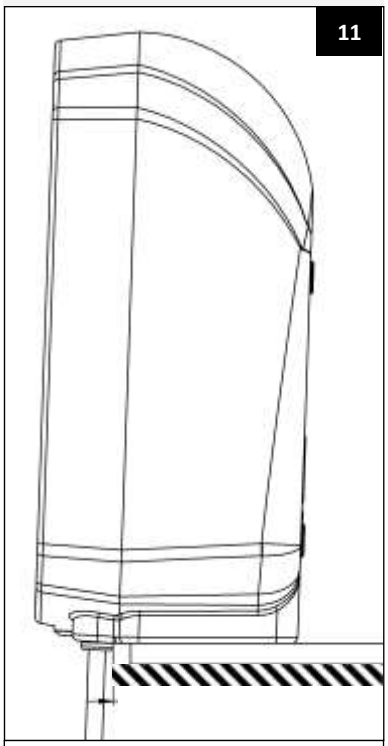

Distance between tube and plate: ± 8 mm

12

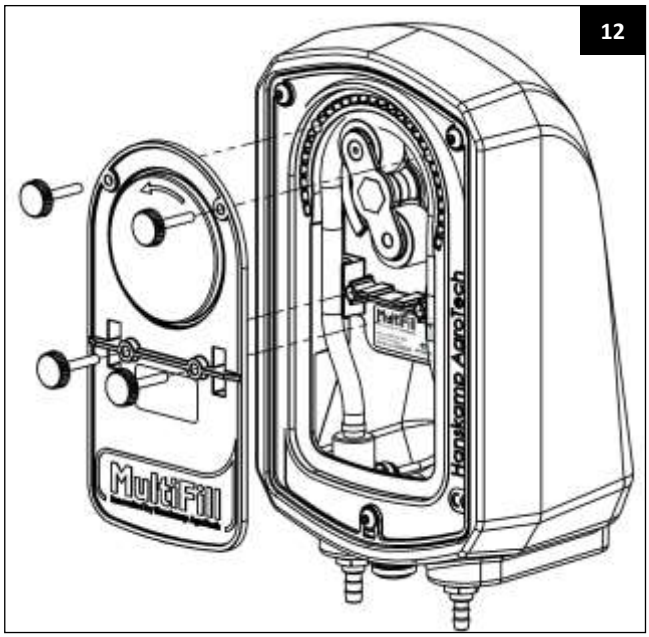

9. Connect the wires of the power supply to the PCB. Connect the positive cable (black with white stripe) to the positive terminal (Br), and the negative cable (black) to the negative terminal (Wh) (fig. 13).
10. Push to close the engine cover.
11. Screw the pump housing onto the wall mount by hand evenly, using the accompanying screws (art. no. 003-510-000) (fig. 14).

13

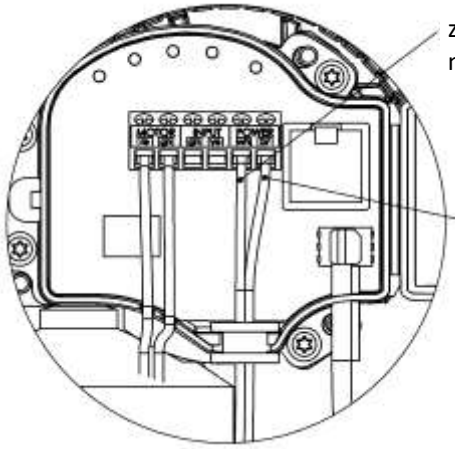

14

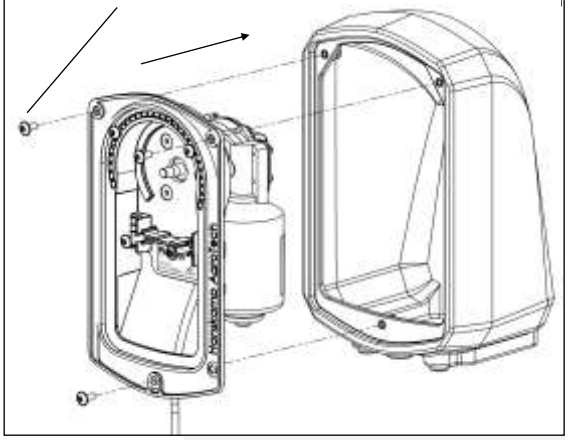

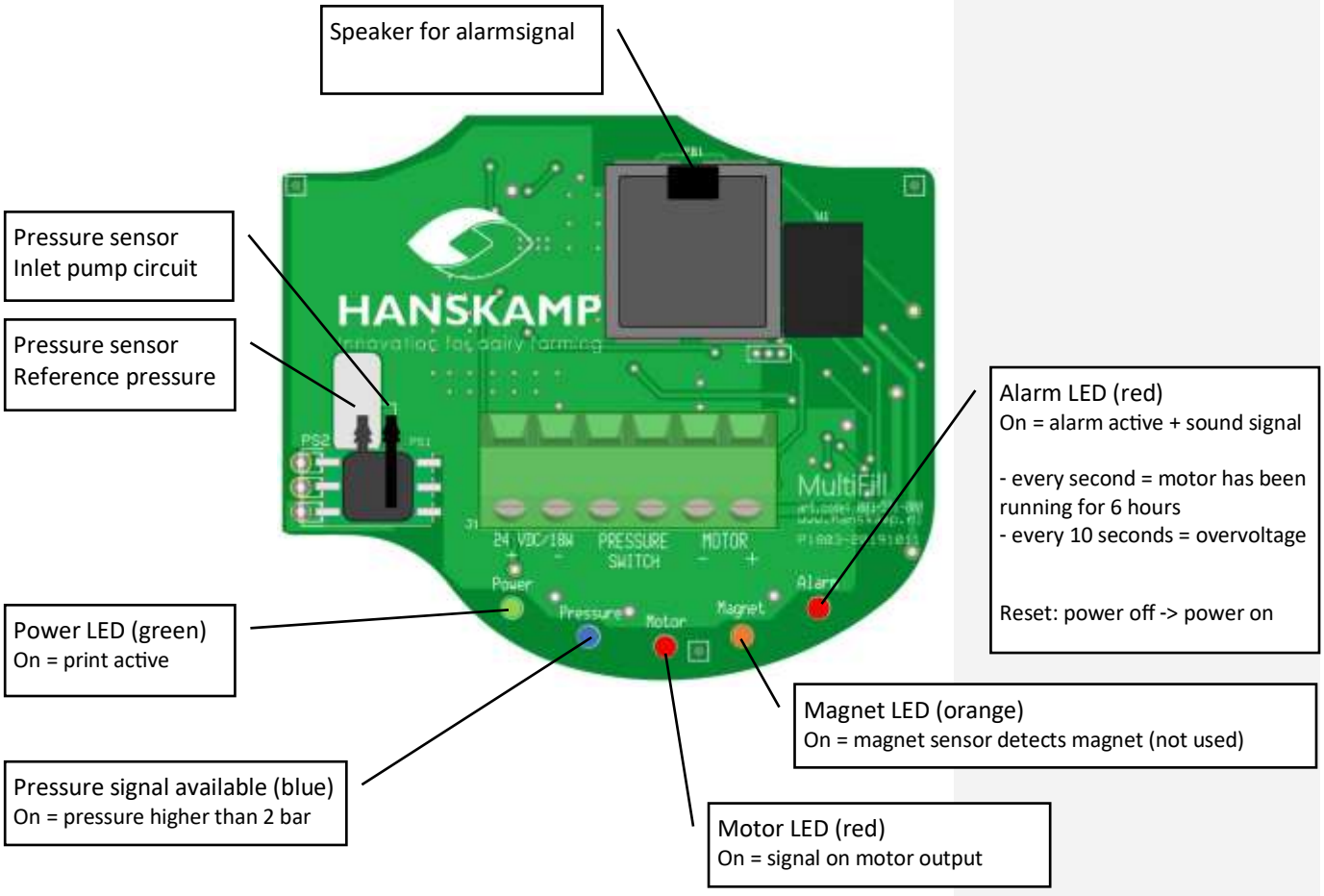

12. Loosen and remove the rotor of the pump by turning it counterclockwise by hand.

Caution! Loosening the rotor manually poses a small risk of injury.

13. Use the 50 m PVC hose as pressure hose and cut it to size. Use the 2 m hose as suction hose.

1x pumping hose Ø11,5	HanskampQualityTube	art. no. 003-529-005
1x suction hose = 2 m	PVC hose Ø10x7	art. no. 001-006-002
1x pressure hose = 50 m	PVC hose Ø14x10	art. no. 001-007-001

Please note! Hanskamp can only guarantee proper operation if the length of the suction hose is 2 meters or less.

14. Take the suction hose and push it, from below, onto the right-hand feedthrough coupling (art. no. 003-572-000).
15. Push the HanskampQualityTube onto the other side of the feedthrough coupling and secure it with a cable tie. Tighten the cable tie as firmly as possible.
16. Push the pressure hose, from below, onto the hose connector on the left-hand side (art. no. 001-179-000) (fig. 17).

Caution! The HanskampQualityTube is not suitable for acids. A hose kit especially suitable for acids is available from Hanskamp.

Caution! When tightening the cable tie, there is a risk of injury from pinching.

Caution! Always cut the hose straight. A hose cut at an angle can impair proper functioning.

Caution! Make sure that the end of the hose is placed at the bottom of the storage tank, otherwise the pump will not be able to pump all the fluid.


15

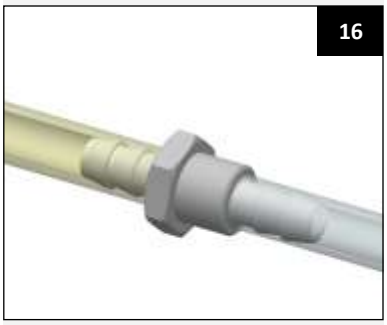
16

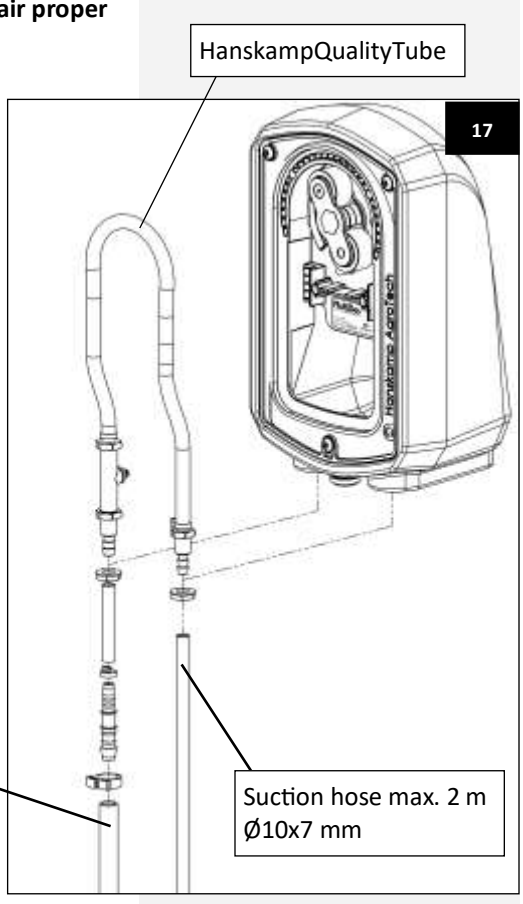

17

17. Tighten the cable tie firmly so that the hose cannot come loose.
18. Take the HanskampQualityTube and bend it as much as possible to fit it into the form of the pump housing.
19. Push the loose end of the HanskampQualityTube onto the same hose nozzle to which the pressure hose is attached.

Caution! When tightening the cable tie, there is a risk of injury from pinching.

Caution! Always cut the hose straight. A hose cut at an angle can impair proper functioning.

20. With the side of the conical recess, turn the rotor onto the shaft of the pump motor. With the last rotation, press the HanskampQualityTube into the recess of the pump housing as well as possible. The tube is now clamped between the rollers and the pump housing. Tighten the rotor on the motor shaft by hand (fig. 19 and 20).
21. Now take the transparent pump cover (art. no. 003-502-000) and the 4 corresponding knurled screws (art. no. 003-509-001). Position the cover properly in front of the cover recess in the pump housing and tighten the screws evenly until the cover is firmly in place (fig. 22). Please note: Tight is tight!
22. Connect the pressure hose to the reducer of the float set and insert the suction hose into the storage tank.
23. Manually fill the MultiDos container, until the level reaches the float valve.
24. Plug the power adapter into a wall outlet, to start the pump automatically.

Please note! During the first revolutions, no pumping process can be seen, as the rotor is tightening itself on the motor shaft.

Please note! To prevent loss of liquid in case of leakage, the MultiFill stops automatically after 6 hours of continuous rotation and emits a sound signal. To restart the MultiFill, briefly disconnect the power supply and then reconnect it, using the power adapter.

18

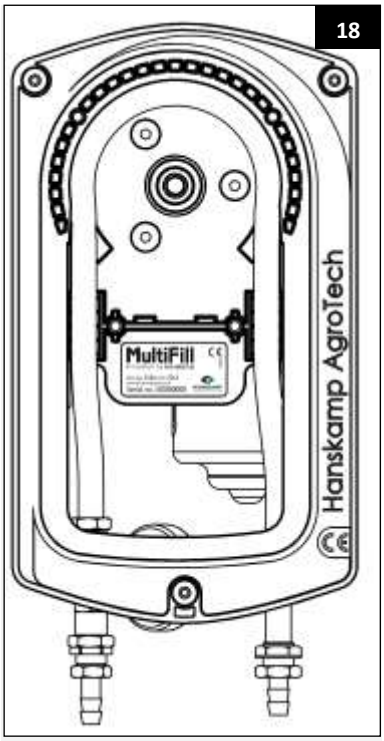

19

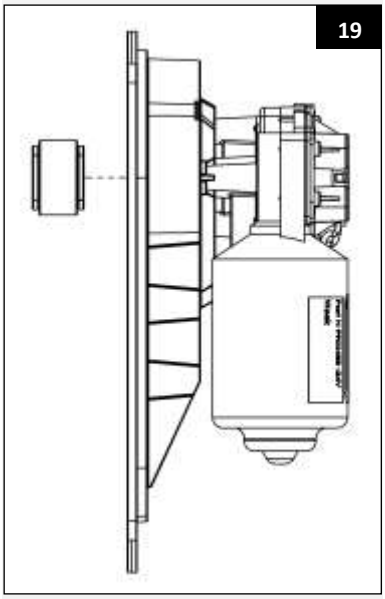

20

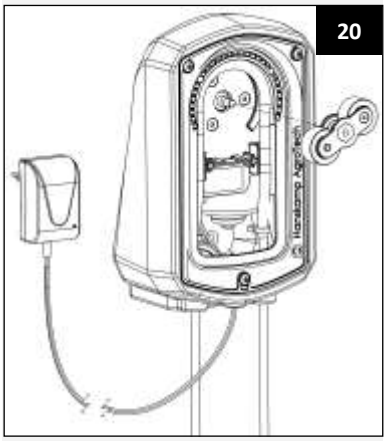

22

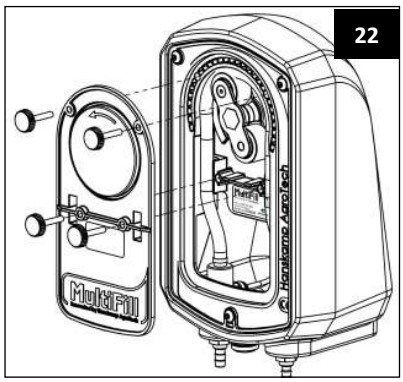

21

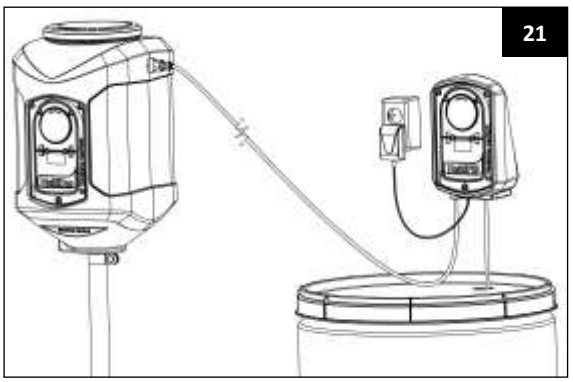

Maintenance

Check the MultiFill system every day for failures and wear. Carry out a visual inspection of the suction and pressure hose and the electrical wiring. Replace the Hanskamp-QualityTube if it shows signs of wear (leakage), according to the steps described (see instructions from step 6). A suitable repair kit can be obtained from Hanskamp. Also check the rollers and bearings for wear. For these too, Hanskamp can supply repair kits.

Caution! Always disconnect the pump motor from the power supply before carrying out maintenance and/or disassembly.

Disassembly

In case of disassembly, all parts must be separated according to material type and must be processed within the proper type of waste management system.

Overview of changes made in these installation and operating instructions

Nr.	Release date	Chapter(s)	Comments
1	08/2014		First edition
1.1	03/2015	All	New address
1.2	04/2015	All	Update of illustrations
1.3	10/2015	All	General review
1.4	06/2016		Article numbers changed
1.5	10/2017	All	Added articles 001-006-002, 003-529-005 and 003-524-001 in parts list
1.6	01/2018	All	Multiple couplings replaced by 1 coupling
1.7	04/2018	All	Auto-stop MultiFill
1.8	07/2018	Components	Wall plug power supply changed from 12V DC to 24V DC
1.9	01/2019	Technical specifications	Pressure switch changed
2.0	03/2019	Installation float valve	Added warning notice to fill up the container completely at first use
2.1	08/2019	All	Knurled screw added & upgrade to new MF-motor
2.2	02/2020	Page 12	Changed warning after step 24.
2.3	05/2020	Page 10	Added PCB overview
2.4	09/2021	Page 10 + 15	Switch-off pressure increased from 1.3 to 1.5 bar
2.5	10/2021	Page 8 + 11 + 15 + 16 + 17	Transport hose changed to 14x10 mm
2.6	02/2022	Page 10 + 15	Adjusted cut-out pressure (1.5 to 2 bar) and start-up pressure (0.3 to 0.8 bar)
2.7	01/2023	Page 14	UKCA logo added
2.8	11/2023	Page 7	UKCA figure added

Warranty limitations

Costs and expenses resulting from the following are excluded from the warranty:

- Using the equipment improperly, in violation of the specifications in the installation and operating instructions;
- The consequences of any intervention by mechanics other than mechanics approved by Hanskamp for carrying out certain work;
- Incidents such as freezing, ice, fire, flood, flooding or any other problems caused by excessive water, and lightning;
- Defective electrical system or earthing;
- Using compressed air that does not meet Hanskamp's quality standards;
- Damage to the electrical system caused by pests and the like.

The warranty does not apply to consequential damages unrelated to the machine itself. All systems have been tested, However, in the event of defects, Hanskamp AgroTech BV cannot be held responsible for consequential damage.

Declaration of incorporation of complete machines IIA

According to Annex IIA of the Machinery Directive 2006/42/EC, for completed machines

We,
Hanskamp AgroTech BV
Broekstraat 17
7009 ZB Doetinchem
The Netherlands,

Authorised compiler(s) of the technical file:

H.J. Hanskamp,

declare under our sole responsibility that the following product:

MultiFill (230 V), type number 003-561-00X up to 003-565-00X,
Universal refill system for constant supply of concentrate liquids,

to which this declaration relates, complies with the provisions of the following directive(s):

- Machinery Directive 2006/42/EC

The product also complies with the provisions of the following standards:

- NEN-EN-IEC 60204-1
- NEN-EN-ISO 12100:2010
- NEN-5509
- NEN-EN 349
- NEN-EN-ISO 13857

Power Supply:

- EMC directive 2004.108/EC
- EN 55022:2010
- EN 61000-3-2:2006+A1:2009+A2:2009:
- EN 61000-3-3:2008:

If the MultiFill is not connected and the prescribed safety instructions are not used, this Declaration of Conformity is not applicable and no rights can be derived from this declaration.

Doetinchem, the Netherlands, 05-12-2023 H.J. Hanskamp



Appendix 1: Article numbers and technical specifications MultiFill

Article numbers	Description
003-561-005	MultiFill black, complete, 230 V
003-562-005	MultiFill green, complete, 230 V
003-563-005	MultiFill blue, complete, 230 V
003-564-005	MultiFill red, complete, 230 V
003-565-005	MultiFill orange, complete, 230 V

Technical specifications 10106 MultiFill	
Capacity	200 ml/ min
Voltage	230 Volts
Suction height	2 meters
Pressure height	4 meters
Max. length pressure hose	50 meters
Control range	Regulates between 0.8 and 2 bar
Certificate	NEN 3140
Power cord	3 meter cord with plug

Appendix 2: Exploded view MultiFill and rotor (003-524-001)

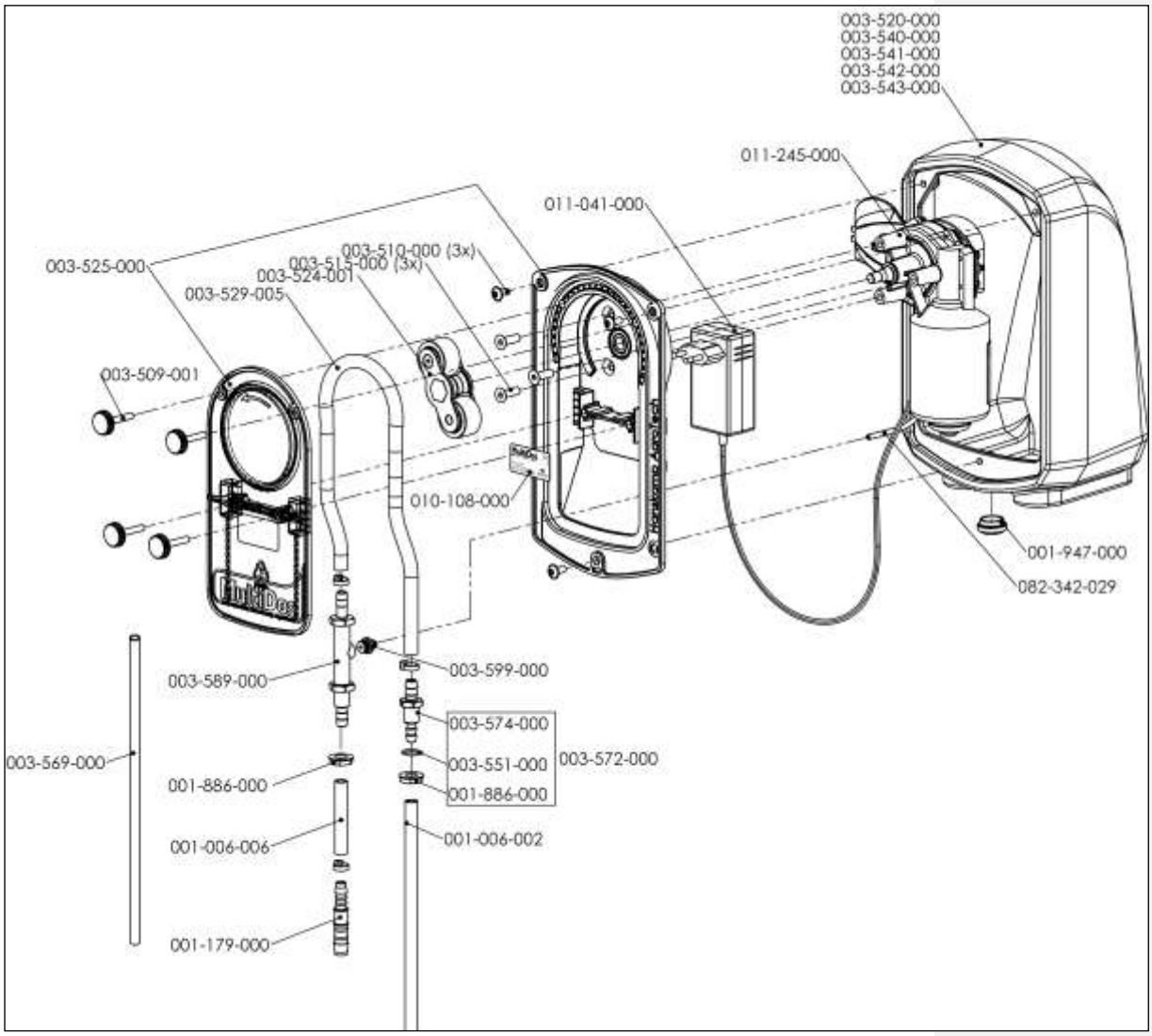

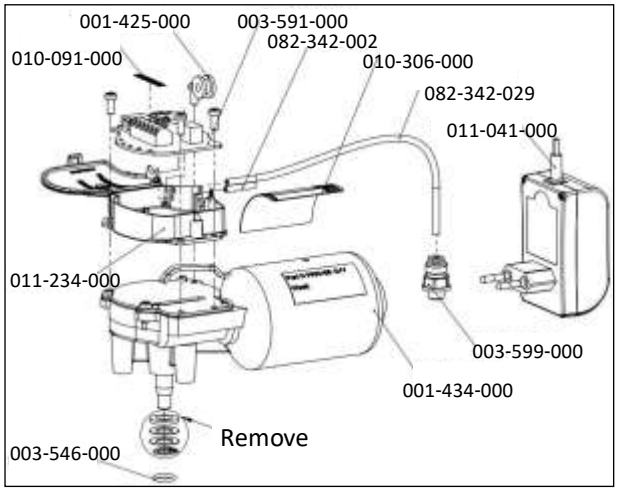

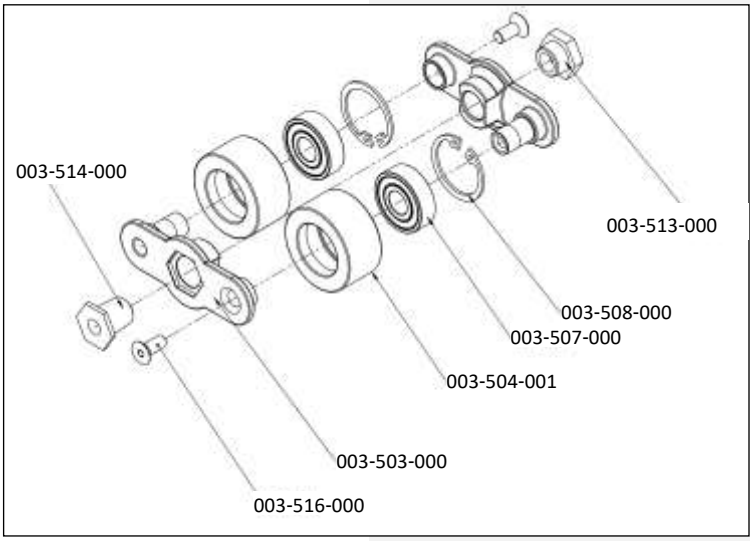

Appendix 3: Loose components

Loose spare parts for the purpose of maintenance or other work can be reordered through your dealer. Please use the corresponding item numbers as indicated below.

Components MultiFill		
Art. no.	**Description**	**Quantity**
001-006-002	PVC hose, 2 m, Ø10x7	1
001-006-006	PVC hose, 6 cm, Ø10x7	1
001-179-000	Hose connector, 8 mm - 10 mm	1
001-947-000	Membrame grommet, thermoplastic elastomer	1
003-510-000	Hexagon socket screw with flange M5x10	3
003-515-000	Countersunk screw with hexagon socket M5x30	3
003-524-001	Rotor complete, incl. castors, fixing material and rotor part	1
003-525-000	MultiDos pump housing, complete with cover	1
003-529-005	HanskampQualityTube Q-prene, 0.48 m	1
003-569-000	Suction tube Ø8x1, AISI304, l = 300 mm	1
003-572-000	Feedthrough coupling plastic 9-9	1
003-589-000	Feedthrough coupling for MultiFill with connection for pressure switch	1

Components Motor MultiFill		
Art. no.	**Description**	**Quantity**
001-425-000	Rubber grommet Ø14 - Ø5, 8.4 mm	1
001-434-000	Motor, black, 28 RPM	1
001-435-000	Hotmelt Permacol 30.288	0.2
003-546-000	O-ring 10x2 NBR70	1
003-591-000	MultiFill control PCB SS 2K2, 0.25 W	1
003-599-000	Plastic Ø4 coupling, perpendicular screw-in 1/8”	1
010-091-000	Sticker on connection block IM Motor	1
010-306-000	Sticker on MultiFill Motor 18 RPM	1
011-041-000	Plug-in power supply unit 230V AC - 24V DC, 1500 mA	1
011-234-000	Housing for sensor PCB, grey	1
082-342-002	Air tube PU/2 cm 4x2, transparent	1
082-342-029	Air tube PU/29 cm 4x2, transparent	1

Components Rotor (003-524-001) MultiFill		
Art. no.	**Description**	**Quantity**
003-503-000	Rotor part, red	2
003-504-001	Plastic roller, black, Ø31.6 mm	2
003-507-000	Bearing 6000RS	2
003-508-000	Circlip	2
003-513-000	Conical adapter, stainless steel	1
003-514-000	Adapter, stainless steel	1
003-516-000	Countersunk screw with hexagon socket M5x10	2

Colour options wall mount	
Art. no.	**Description**
003-520-000	Wall mount MultiDos, black, incl. 3 inserts
003-540-000	Wall mount MultiDos, green, incl. 3 inserts
003-541-000	Wall mount MultiDos, blue, incl. 3 inserts
003-542-000	Wall mount MultiDos, red, incl. 3 inserts
003-543-000	Wall mount MultiDos, orange, incl. 3 inserts

MultiDos pump housing complete with cover 003-525-000		
Art. no.	**Description**	**Quantity**
003-501-000	MultiDos pump housing	1
003-502-000	MultiDos pump housing cover, transparent	1
003-507-000	Bearing 6000RS 10x26x8, stainless steel	1
003-509-001	Knurled screw M5x29 a2, stainless steel	4
003-519-000	Multisert 003-M5 - inserts for plastic MultiDos	4
010-066-000	Sticker with serial no. MultiDos, to be applied on pump housing MultiDos	1

Additional parts MultiFill		
Art. no.	**Description**	**Quantity**
001-007-001	PVC hose Ø14x10	50 m
002-260-000	Float valve set MultiFill	1

Appendix 4: HanskampQualityTube warnings and usage instructions

003-529-005 HanskampQualityTube
Warnings and usage instructions for dealers, sellers and users of the MultiDos.



Caution! The HanskampQualityTube is not intended for medical use!

Read the notes and instructions carefully before using or reselling the MultiDos.

The following warnings and instructions must be followed to prevent breaks or leaks in the hose, which could result in damage to property and/or personal injury during use.

Warnings

1. The HanskampQualityTube is made of thermoplastic, and its performance depends on the temperature and pressure.
2. Some liquids can be absorbed or extracted by the HanskampQualityTube. The end user is responsible for observing and documenting the specifications, safety regulations and documentation of the HanskampQualityTube.
3. The end user is responsible for determining the suitability of the hose formulation for the application.
4. The HanskampQualityTube is not intended or suitable for medical applications. The use of this hose in a medical application is the sole responsibility of the dealer and/or end user.
5. To avoid catastrophic disconnection during use, detachable clamps must always be used when attaching the hose to a coupling or fitting.
6. The end user is advised to have a back-up system available in case the hose ruptures.
7. No hose will last forever, and this also applies to hoses used in the MultiDos; following prolonged use or improper installation, the hose will rupture.

The following factors will affect the service life of the HanskampQualityTube in the MultiDos liquid pump:

- The liquid being pumped;
- Percentage closure of the hose wall;
- Pump speed (in combination with roller strokes per minute) and total number of strokes;
- System back pressure;
- Temperature of the fluid being transported and ambient temperature;
- Frictional resistance due to deficient maintenance or wear on the rollers and guides;
- Twisted, kinked or excess length of the HanskampQualityTube installed in the MultiFill;
- Wall thickness and thickness variation.

To prevent any damage to property, or consequential damage, always do the following when using the HanskampQualityTube in the MultiDos pump:

- Carefully set up and monitor each of the factors mentioned above while using the HanskampQualityTube in the MultiDos;
- Read and respect the instructions of Hanskamp (manufacturer) or dealer of the equipment and the MultiDos with regard to installation, use, maintenance and disassembly;
- Inspect the HanskampQualityTube for damage before installation;
- Check the HanskampQualityTube is the correct length, and that the hose is not installed twisted or kinked in the MultiDos;
- Constantly check the hose circuit for signs of breaks or leaks in the HanskampQualityTube, and take action if necessary.

Material safety data sheets are always available from Hanskamp.

Copyright and disclaimer
The information in this publication is for informational purposes only, and is not intended as a sales quote. The products offered may differ from the images. Any brand or product references in this manual are for identification purposes only. The company and product names mentioned in this manual are trademarks. No part of this publication may be reproduced or made public without the prior written consent of Hanskamp AgroTech BV. Although this publication has been compiled with the greatest care, Hanskamp AgroTech BV is not liable for any damage that may arise due to any errors or omissions it might contain. The Dutch installation and operating instructions are the original installation and operating instructions. Translations into other languages are based on the Dutch installation and operating instructions as a source document. Hanskamp AgroTech BV accepts no liability for differences between the translations. If there are any doubts about the content and accuracy of the translated installation and operating instructions, the Dutch installation and operating instructions shall prevail.

Hanskamp AgroTech BV
Broekstraat 17
7009 ZB Doetinchem
The Netherlands
Tel: +31 (0)314 - 393 797
Fax: +31 (0)314 - 393 826
www.hanskamp.com

Also take a look at: