MultiDos 035-000-000
036-000-000

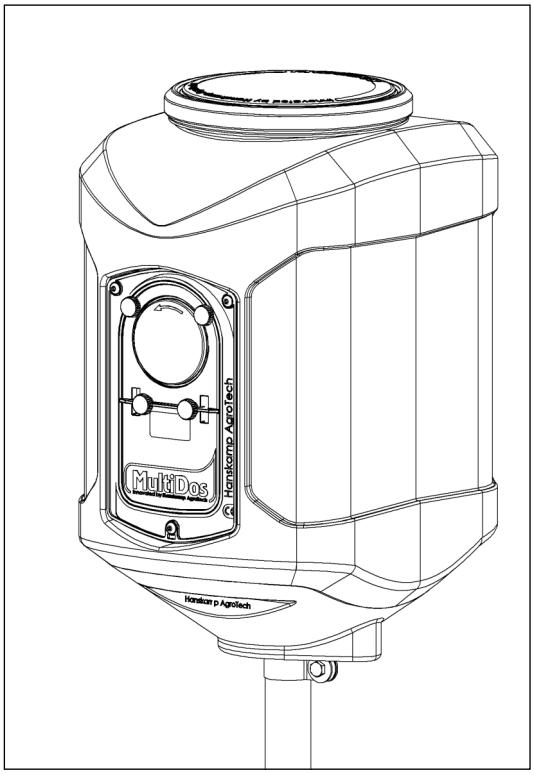

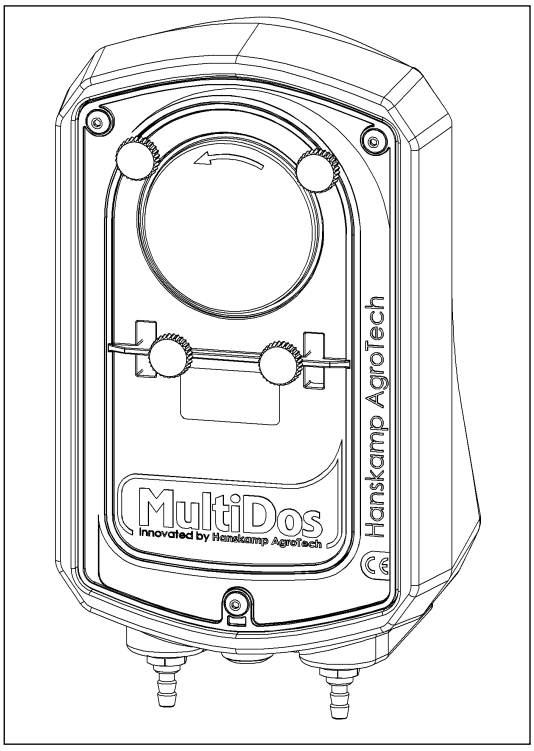

Vloeistofdoseersysteem
Liquid dosing system
Flüssigkeitsdosiersystem
Système de dosage pour liquide

Installation and Operating Instructions **EN**

HANSKAMP
Innovation for dairy farming

Article number: 010-100-000

Date: October 2024
Version: 2.2 - Translation of original Installation and Operating Instructions
According to Annex 1 Section 1.7.4 of the Machinery Directive 2006/42/EC

Doetinchem,
The Netherlands
www.hanskamp.com

Foreword

Contents of the installation and operating instructions

This manual contains the information necessary for the correct installation and operation of a Hanskamp MultiDos. Please read this information carefully, and make sure you understand everything before configuring the MultiDos. Failure to do so could result in damage to equipment. Please contact Hanskamp if the information is not clear to you, or if you need more information.

All the information in this manual was compiled with care. Hanskamp is not liable for any errors or shortcomings in this manual. The recommendations are intended as guidelines. All instructions, illustrations and specifications in this manual are based on the latest information available at the time of publication. Your MultiDos may have improvements, features, or options that are not covered in this manual.

Applicability

The table below shows the type numbers of the MultiDos for which this manual is applicable.

Model designation

Model	Type number	
MultiDos in Container (AC &DC)	035-001-000 035-002-000 036-001-000 036-002-000	Page 8 to 12
MultiDos wall mount (AC&DC)	035-003-000 036-003-000	Page 13 to 17

Contact number of milking technology dealer

We recommend that you enter the name, phone number and e-mail of your milking technology dealer in the table below, so that you can always find the right information easily.

Name	
Address	
Phone number	
E-mail	

1. Introduction

The MultiDos from Hanskamp is a piece of proven, sustainable technology that makes dosing the right amount of liquid additive per day and per cow very simple. It is a smart, fast and affordable solution. MultiDos doses liquid concentrates over feed as if it were gravy, and cows love it.

The information in this manual is intended for dairy farmers and technicians.

- Dairy farmers can use the information to test and adjust the MultiDos.
- Technicians can use the information to install and set up the MultiDos.

2. Safety

2.1 Introduction

The 'Safety Warning' symbol warns about important safety messages on your MultiDos and in the manual. Use caution if you see this symbol; it means there is a risk of personal injury or death. Follow the directions of any safety messages.



Safety Warning Symbol

2.2 Warning Texts

Note the use of the warnings **CAUTION** and **DANGER** in the safety messages. The following guidelines apply to these warnings:



Caution! Indicates a potentially hazardous situation which could result in minor personal injury or damage to equipment or the environment if the warning is ignored.



Danger! Indicates a potentially hazardous situation which could result in death or serious injury if ignored.

2.3 Safety Instructions

You are personally responsible for operating and maintaining your MultiDos safely. You must make sure that you and anyone else who operates the equipment, performs maintenance on the MultiDos or works in the vicinity of the MultiDos, are familiar with all the safety information in this manual.

Safety is in your hands. Proper safety measures protect you and the people around you. Incorporate these measures into your safety programme. Make sure that everyone who uses, carries out maintenance, or works in the vicinity of the MultiDos is aware of these safety measures. Do not risk injury or death by ignoring the safety precautions.

- MultiDos owners must train users before the MultiDos is used. This training must be repeated at least once a year.
- The user must read, understand and follow all the safety and operating instructions in the manual.
- Anybody who has not read and understood all the safety and operating instructions must not operate the MultiDos.
- Do not make any modifications to the equipment. Unauthorised modifications may affect operation, affect the service life of the equipment, and/or result in personal injury.
- Only use original spare parts, and make sure that they are fitted by authorised technicians.

2.3.1 General safety

- Make sure that you have read and understood the manual and the safety instructions before connecting the power supply to operate or adjust the MultiDos, or turning it off for maintenance.
- Only trained persons may operate the MultiDos.
- A first-aid kit must be available near the MultiDos. Store in a highly visible place.
- A carbon dioxide or foam fire extinguisher must be available near the Multi-Dos. Store the fire extinguisher in a highly visible place.
- Install all guards and safety devices before using the MultiDos.
- Wear proper protective clothing and equipment.
- Before cleaning the MultiDos or performing maintenance on it, switch off the power supply of the MultiDos by removing the plug from the socket.
- Make sure that phone numbers of emergency medical care available in your area are at hand.
- If you have any other questions, please contact your milking technology dealer.
- Review all safety-related topics with all users at least once a year.

2.3.2 Electrical safety

- Only a qualified electrician may install the MultiDos power supply.
- Check whether the earthing of the electrical system and all parts of the MultiDos comply with local rules and regulations.
- Replace any damaged electrical lines, conduits, switches and components immediately.
- Isolate the electrical power supply before you open the MultiDos to work on the electrical system.

2.3.3 Safety during installation

- Make sure that you have read and understood the instructions in this manual.
- Check whether the MultiDos has been installed correctly, as described in the manual.

2.3.4 Safe operation

- Make sure that you have read and understood the manual and the safety instructions before connecting the power supply to operate or adjust the MultiDos, or turning it off for maintenance.
- Only trained personnel may operate the MultiDos.
- Before cleaning the MultiDos or performing maintenance on it, switch off the power supply of the MultiDos by removing the plug from the socket.
- Install the lid and other safety devices before using the MultiDos.
- Keep hands, feet, hair and clothing away from live parts.
- Keep all unauthorised persons, especially small children, away from the MultiDos at all times.
- Before connecting the MultiDos to the power supply, make sure that all parts are properly tightened and that all cables and mountings are in good condition.
- If you have any other questions, please contact your milking technology dealer.

2.3.5 Maintenance safety

- Make sure that you have read and understood the manual and the safety instructions before connecting the power supply to operate or adjust the MultiDos, or turning it off for maintenance.
- Only trained personnel may service and maintain the MultiDos.
- Before cleaning the MultiDos or performing maintenance on it, switch off the power supply of the MultiDos by removing the plug from the socket.
- Wear protective clothing and safety glasses when working on the electrical system.
- Make sure all guards and safety devices are installed when you have finished maintenance work.

2.3.6 Safety messages

- This chapter lists the general safety messages. Specific safety messages, where potential hazards may arise if the procedures or instructions are not followed, are included in the appropriate sections of this manual.

3. Installation and operating instructions

General description

The Hanskamp MultiDos-dosing system is a liquid dosing system. The MultiDos is suitable for fluids with a low viscosity like Glycerine, Propyleen glycol, Tirsana or Keto-protect which are based on water or oil. The MultiDos is not suitable for fluids with a high viscosity. The MultiDos can be connected to any general feeding system, just like the PipFeeder and other Hanskamp dosators.

This instruction will help you to install the MultiDos-system (figure 1). Read this instruction carefully and follow the safety instructions. Examples of installation can be found at www.hanskamp.com.

Order numbers and names of accessories can be found in the attachment.

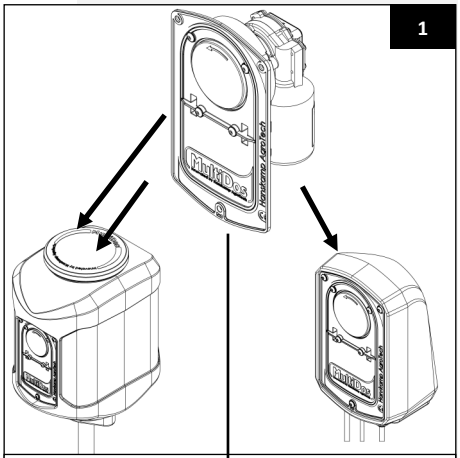

Page 8 to 12 | Page 13 to 17

Transport and storage

A complete MultiDos system set consists out of a MultiDos wall mount or a MultiDos-container with including 1 or 2 MultiDos pumps. The container and/or wall mount will be send in a box. These boxes can be put on each other on a pallet. The MultiDos system can also be send in a box.

Caution! Always move the pallet using a suitable means of transport (forklift, pallet fork, pallet truck, etc.).

Caution! When unpacking the pallet, parts may fall from it.

Safety

The user and installer are responsible for operating and maintaining the MultiDos safely. In case of changing the HanskampQualityTube of the pump (art. no. 003-512-00*), always disconnect the electric system.

Type designation; can be found on the pump housing

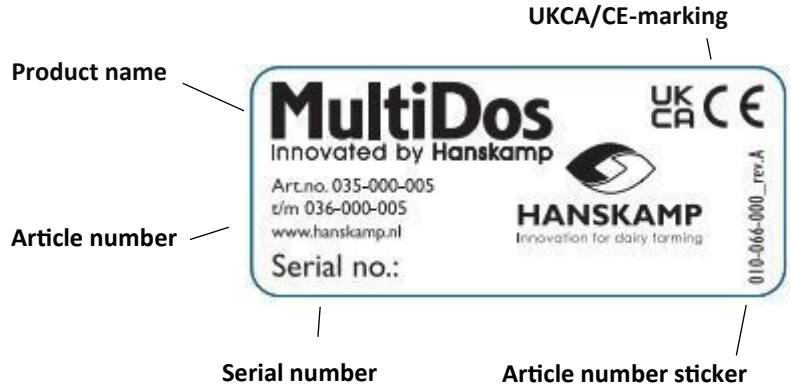

Caution: the stickers present may not be removed!

Maintaining stickers

- Keep safety stickers clean and legible.
- Clean safety stickers with soap and water.
- Do not use solvents or abrasives that could damage safety stickers.
- Replace missing or illegible safety stickers.
- Safety stickers are available from Hanskamp. Always use the article numbers in correspondence.

Mounting of Container version

Look for the assembly of the wall-bracket version at page 13.

This manual contains the information for the installation of one pump unit. When you have two pump units, use exactly the same information to mount the second pump at the other side of the container.

With 2 pumps:
Also drill a hole Ø13 on the other side of the container (fig. 3). Afterwards attach the extra supplied feed through coupling (art. no. 003-572-000) in the hole and secure this with a coupling nut (art. no. 001-886-000).

1. Check that all the parts are present using the item list. The list of materials can be found in the appendix (page 28).

Attention! There are no connection materials included to attach the pipe to the feed station.

2. Attach the mounting pipe (art. no. 003-521-000) 1¼" (Ø 42.4) to a feed station or another feeding system.
3. Install the MultiDos container over the pipe (fig. 2).
4. Slide the container fixer band (art. no. 003-538-000) over the stand pipe until it touches the container. Mount the container fixer band so that the container can't rotate (fig. 4).

Attention! During the assembly of the stand pipe, look for possible clip danger.
Attention! When the container runs easily on the tube, it should be fixed. When the container can make multiple rotations it may impair the operation.

5. Unscrew the 3 Socket screw with flange (art. no. 003-510-000) at the outside of the MultiDos-pump and detach the pump (fig. 5).

1x pump hose Ø11.5 (HanskampQualityTube) (art. no. 003-512-000*)
1x suction hose = 20 centimetres (PVC hose Ø10x7) (art. no. 003-575-000)
1x pressure hose = 5 meter (PVC hose Ø10x7) (art. no. 001-006-005)

6. Take the PVC hose and cut this to size. This part becomes the pressure hose to the sprayer.
7. Place the pressure hose (art. no. 001-006-005) into the hole of the container and through the pipe (fig. 6A and 6B.) This hose goes to the sprinkler.

Attention! Watch out for minor injuries by sharp objects during the installation of the hose trough the stand pipe.
Attention! Make sure that the PVC hose keeps its shape during the mounting of it. Don't pull the tie-wraps too hard, this can pinch the hose.

8. For nozzle assembly see page 22.

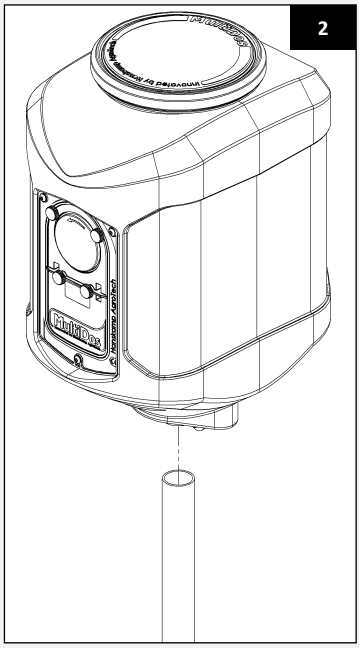

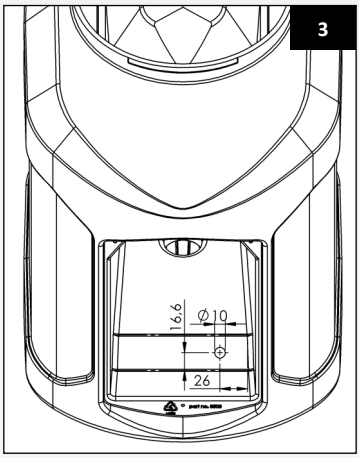

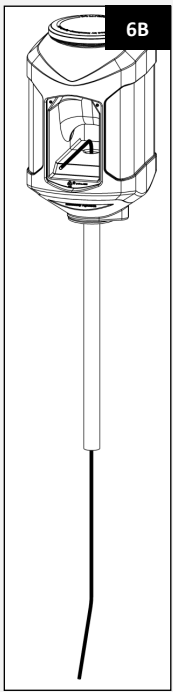

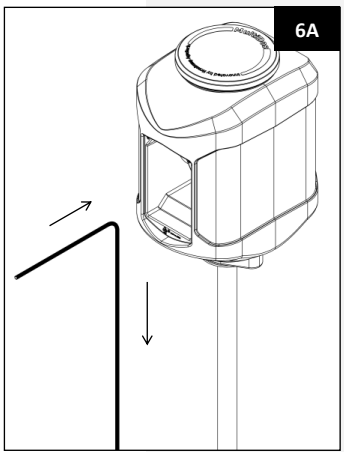

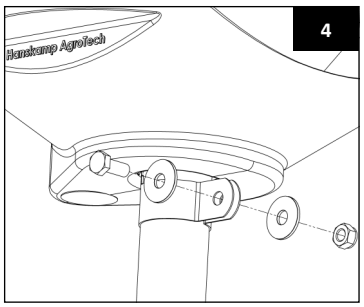

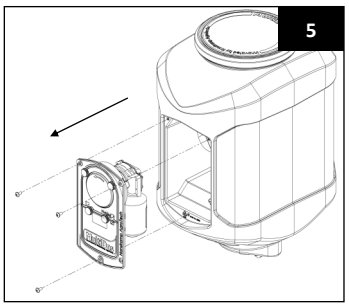

9. Take the already present pressure hose and pull this through the rear wall of the pump housing to the front.
10. Attach the feed-through coupling (art. no. 003-572-000) in the container and on the pressure hose as indicated in figure 7.
11. Afterwards mount the suction hose (art. no. 003-575-000) on the feed-through coupling as indicated in figure 8.
12. Take the pump, remove the knurling bolts (art. no. 003-509-001) and take the transparent cover of the pump housing (art. no. 003-502-000) (fig. 9).
13. Push the end of the electrical cable from the motor into the hole of the container which also contains the pressure hose (fig. 10).
14. Move the pump into the container, make sure the cable and the pressure hose are not pinched.
15. Install the pump with the corresponding screws (art. no. 003-510-000) evenly by hand.

Take care! HanskampQualityTube is not suitable for acids. A hose set suitable for acids is available from Hanskamp.

7

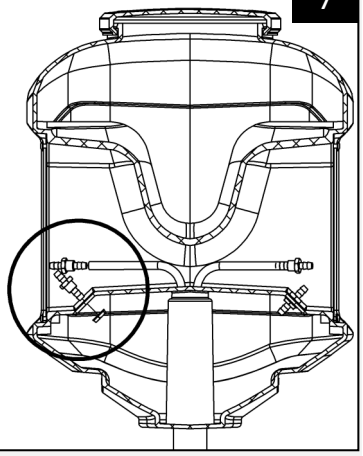

8

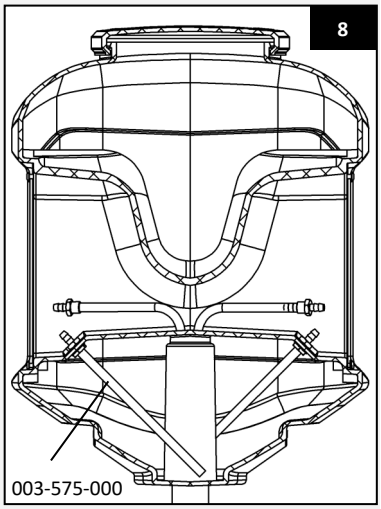

9

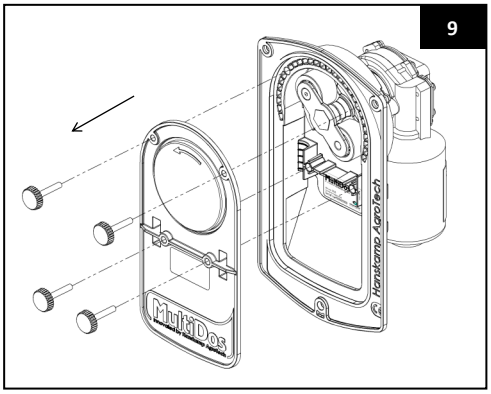

10

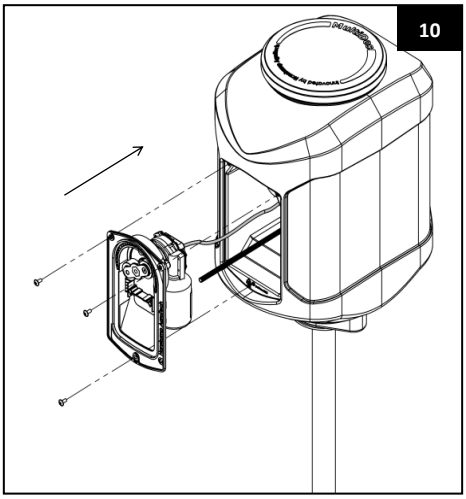

11

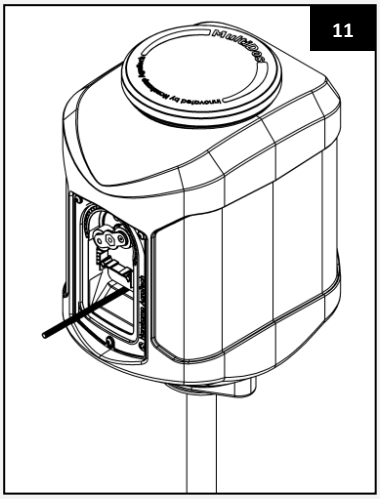

16. Take the pressure hose, HanskampQualityTube (which is located in the pump) and 1 feed through coupling (art. no. 003-572-000). Mount this according to figure 12 and 13.

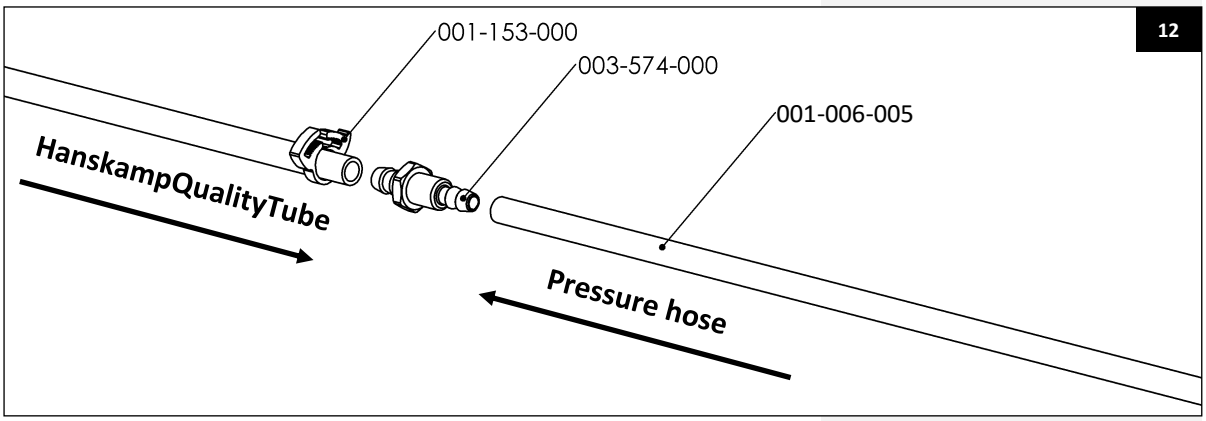

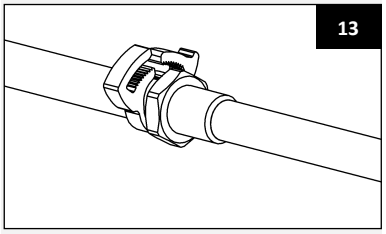

Attention! When assembling of the hose clamps there is a small chance of clamp danger.

Attention! Cut the hose off straight. When the hose is cut crooked, may impair the operation.

17. Turn the rotor of the pump loose by hand (counter-clockwise), and remove it (fig. 14).

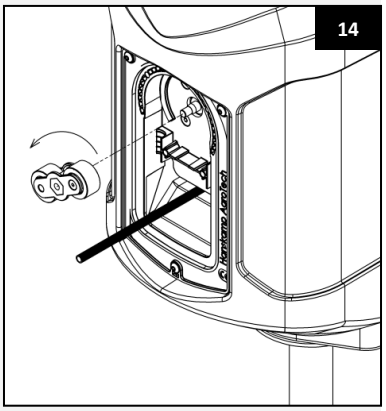

Attention! By loosening of the rotor by hand, minor injuries can occur.

18. Bend the HanskampQualityTube around and slide this over the feed through coupling that sticks out of the pump housing (fig. 15).
19. Bend the HanskampQualityTube as much as possible in the shape of the casing. Press this to the pressure hose as far back as possible in the stand pipe (fig. 17).
20. Take the rotor and turn this with **the side of the conical recess** on the shaft of the pump motor. With the last turn press the HanskampQualityTube into the recess of the pump housing. The hose is now wedged in-between the rollers and the pump housing. Tighten the rotor by hand on the motor shaft (fig. 18 and 19).

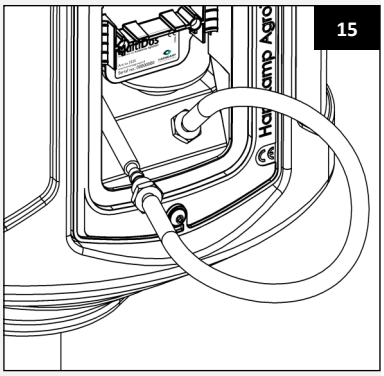

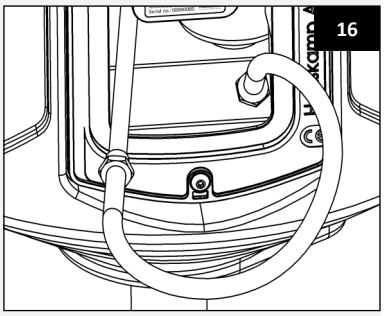

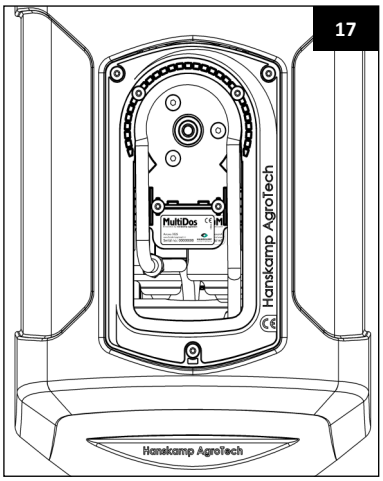

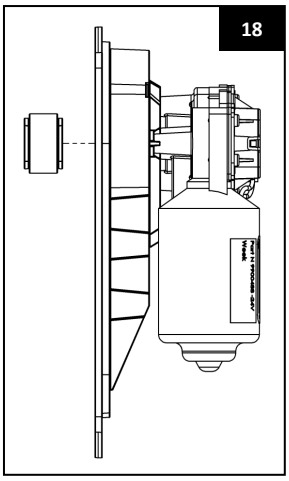

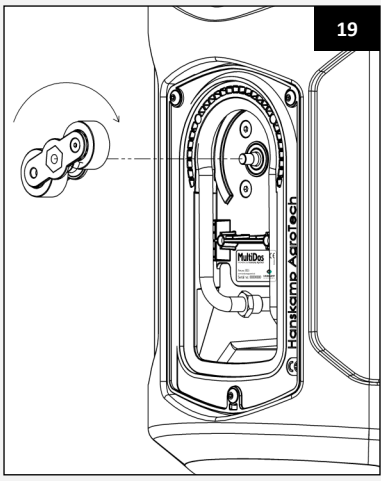

Note! The tube must be placed as perfect as possible in the curve of the pump (fig. 20).

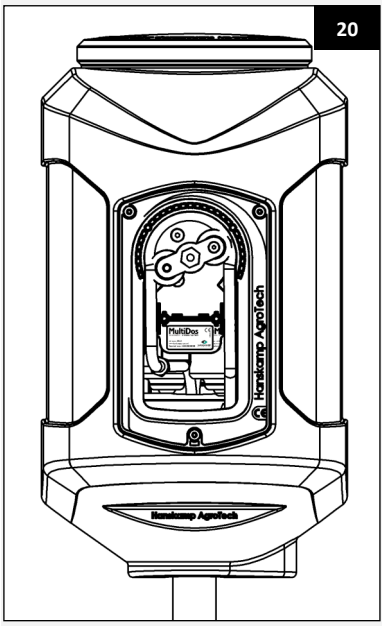

21. Take the transparent cover (art. no. 003-502-000) with the associated four knurling bolts (art. no. 003-509-001). Position the cover so that it is right for the recess in the pump. Tighten the screws evenly until the lid is tight (fig. 21). Note: solid fixed!
22. Connect the motor of the MultiDos to the control board of the feeding station. First, make the control board voltage free, before connecting the motor cable.

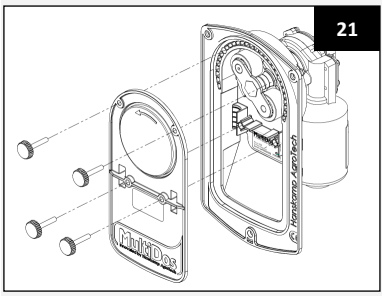

Attention! When connecting the motor to the control board, it is possible that light electric shocks can occur.

23. Always mount the cover, so that dirt and dust can't fall into the container.
24. With one pump unit: mount a stainless steel blind plate on the other side of the container. Fasten the blind plate with the including socket screws (fig. 23) (art. no. 003-545-000).

Maintenance

Check the MultiDos on faults and wearing on a daily basis. Do this by means of a test on the output of de tubes and electric cables. Check periodical the quantity and calibrate if necessary. When the HanskampQualityTube is worn by intensive use (leaking), replace it according described steps. A repair kit is available by Hanskamp. Also check the rollers and bearings for wear. Also these parts are available as a repair kit by Hanskamp.

Attention! Replace the HanskampQualityTube every year, or after pumping 1000 L of fluid.

Calibration

For calibration: operate the motor manually till the liquid emerges from the nozzle.

Attention! During the first rotations you will not see anything happen, this is because the rotor gets fastened to the axel of the motor.

The MultiDos is calibrated by allowing the feeding computer to emit a pulse ten times. Then you measure the amount of dispended liquid, divide this by 10 and enter this value into the feeding computer. Repeat this procedure every month and also after changing the liquid. This is one of the possibilities for calibration. When the manual of your feeding computer describes another method of calibrating, you need to apply that way of calibrating the MultiDos.

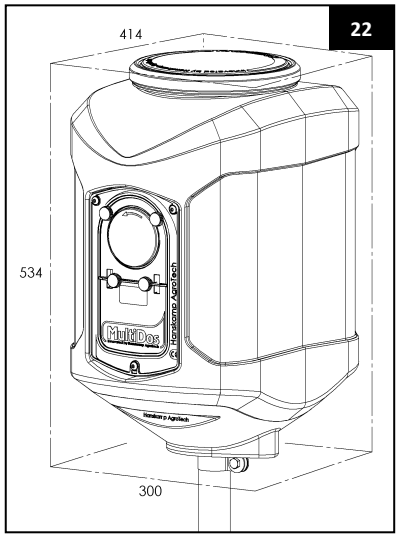

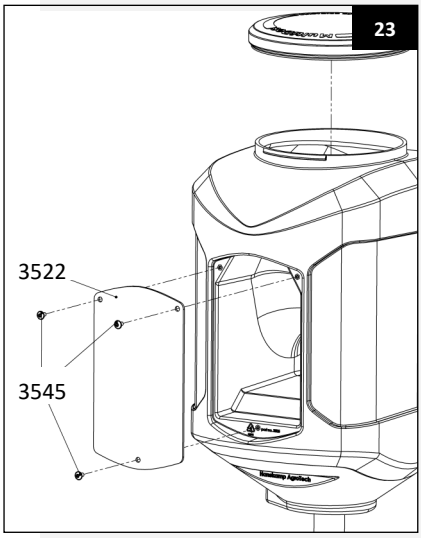

Mounting of Wall-mount version

1. Check if all the parts are present using the item list. The list of materials can be found in the appendix.
2. Unscrew the 3 Countersunk Hexagon socket screw (art. no. 003-510-000) at the outside of the MultiDos pump and detach the pump.

Attention! Place the housing up to a maximum of 2 meters from the bottom of the storage tank.

The MultiDos can be mounted on two different ways.

3a. Wall mounting:
Mount the DIN rail provided vertically on the wall. Mounting material is not included. Then slide from the top of the wall mounting over the DIN rail (fig. 26).

3b. Installed on a surface:
Drill holes in the underside of the MultiDos. The place of the holes is free to choose, minimum distance between the tubes and the place is displayed in figure 27. Then secure the mounting material. Mounting material is not included.

24

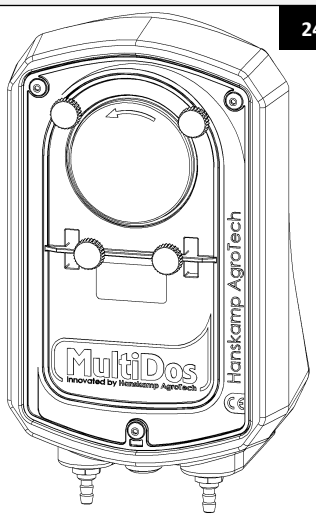

25.1

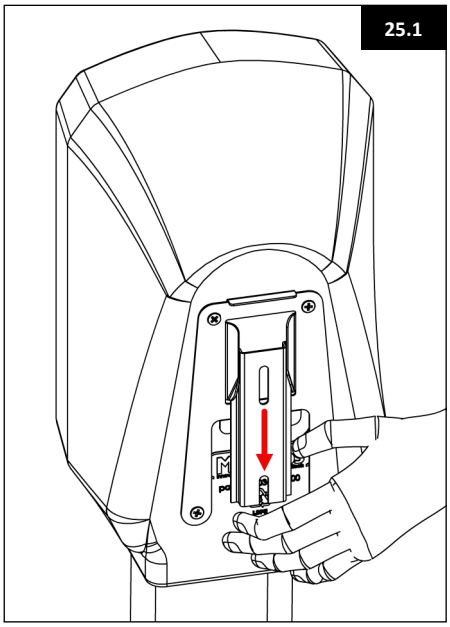

25.2

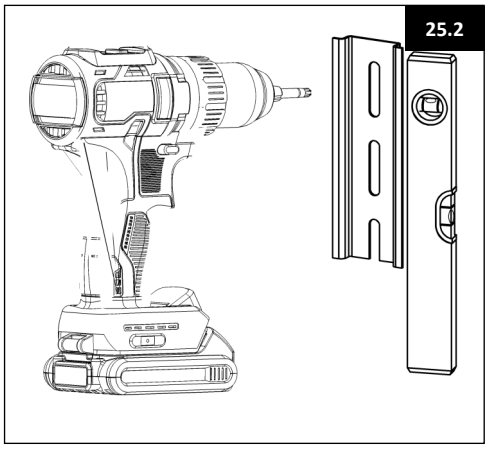

26

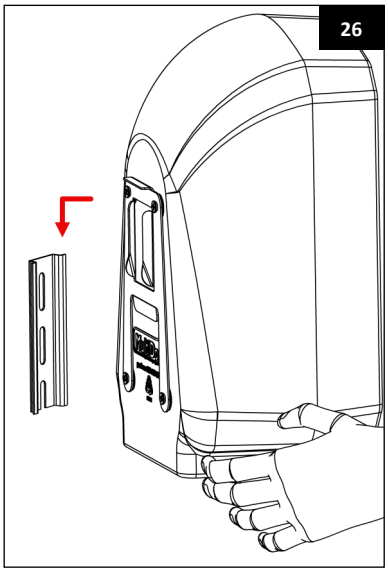

27

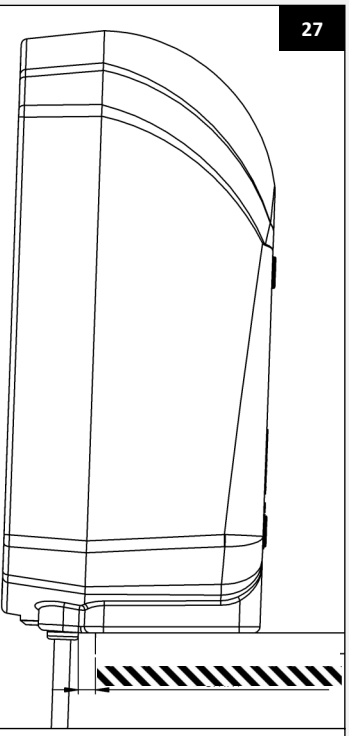

Distance between the tube and the plate: ± 8mm

4. Unscrew the casing of the pump housing.
5. Make a hole in the middle grommet with a small, flat screwdriver. Press the cable of the motor through that hole. This cable gets attached to the relevant control unit. For a correct installation, consult the installation instruction of the relevant control unit. Do this when the mounting of the MultiDos is completed.
6. Mount the feed-through coupling (art. no. 003-574-000) in the 2 outer most holes of the wall attachment and secure these with a union nut (art. no. 001-886-000) as indicated in figure 29.
7. Steadily screw the pump housing with the accompanying screws (art. no. 003-510-000) hand-tight on the wall attachment (fig. 30).
8. Loosen the rotor of the pump by turning anti-clockwise and remove it.

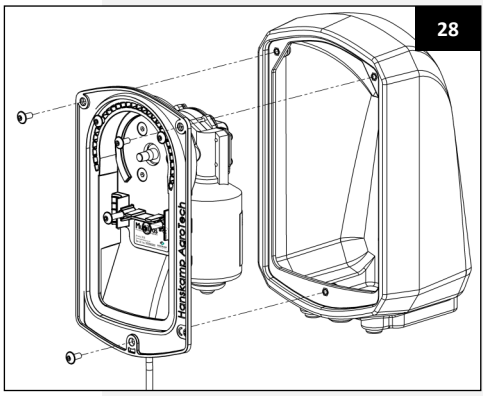

Attention! By loosening of the rotor by hand, minor injuries can occur.

Attention! Hanskamp only guarantees a correct operation when the suction hose is 2 meters or shorter. Use the 5 meter hose as a pressure hose.

Attention! HanskampQualityTube is not suitable for acids. A suitable hose kit for acids can be ordered from Hanskamp upon request.

Attention! Cut the hose off straight. When the hose is cut off skewed, it may impair the operation.

Attention! Make sure that the end of the suction hose is placed at the bottom of the container, otherwise the pump cannot pump all the liquid.

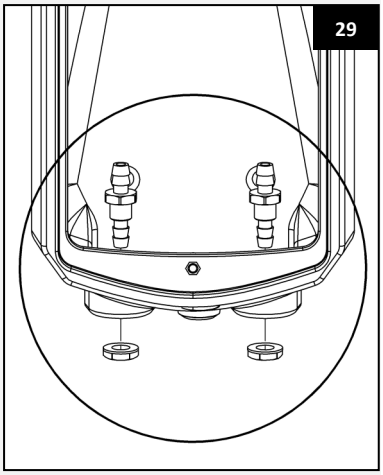

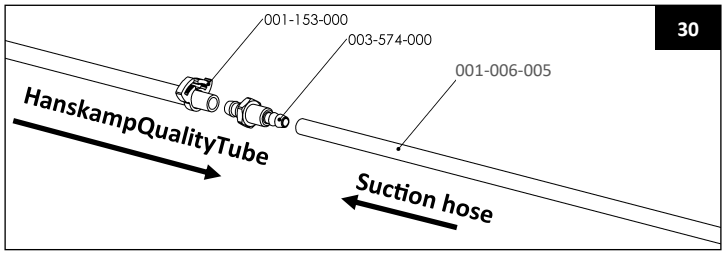

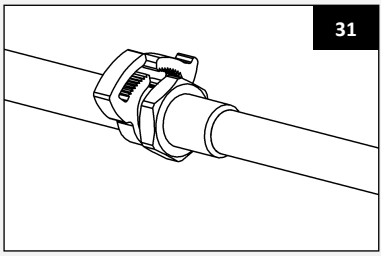

9. Take the right side of the HanskampQualityTube and slide this on the feed-through coupling (art. no. 003-572-000) (fig. 30).
10. Bend the HanskampQualityTube round and slide this over the left feed-through coupling (fig. 32).
11. Now slide the suction hose on the right feed-through coupling.
12. Repeat this with the pressure hose on the left-hand side.
13. Take the HanskampQualityTube, bend this as much as possible in the shape of the pump housing (fig. 34).

Take care! Always cut the hose square. If the hose is cut obliquely this can adversely affect the operation.

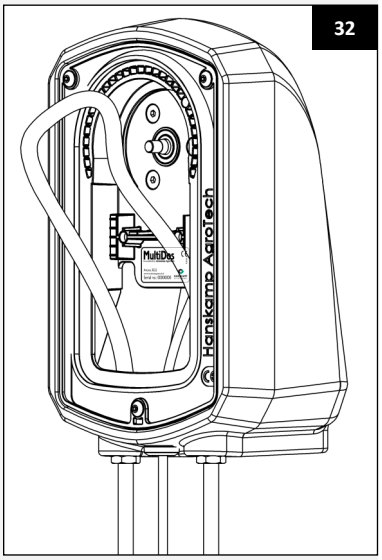

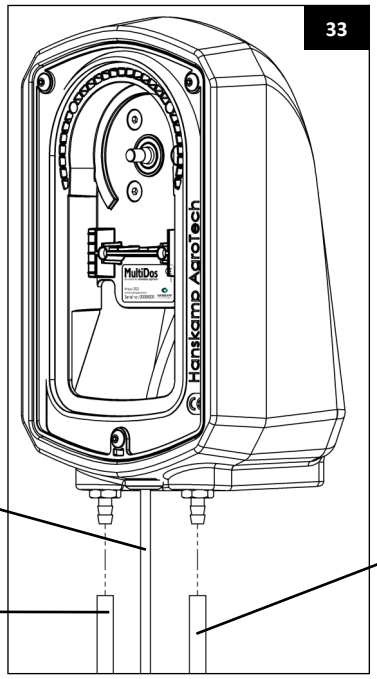

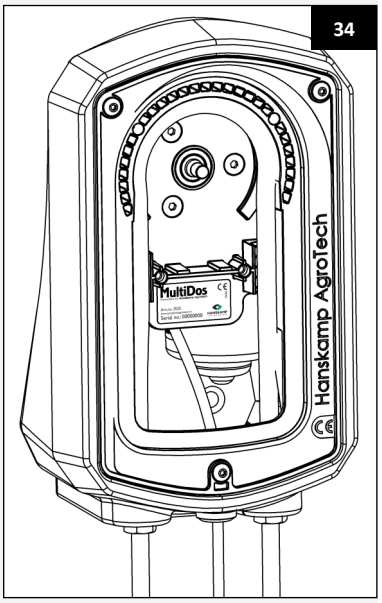

14. Take the rotor to turn it on the side of the recess **(protruding side)** in the shaft of the pump motor. With the last tightening turn, press the HanskampQualityTube into the recess of the pump. The tube is now clamped between the rollers and the pump casing. Turn the rotor by hand on the motor shaft (fig. 35 and 36).

Note! The tube must be placed as perfect as possible in the curve of the pump (fig. 36).

15. Take the transparent cover (art. no. 003-502-000) with the associated four knurling bolts (art. no. 003-509-001). Position the cover so that it is right for the recess in the pump. Tighten the screws evenly until the lid is tight (fig. 37 and 38). Note: solid fixed!
16. Connect the motor of the MultiDos to the control board of the feeding station. First, make the control board voltage free, before connecting the motor cable.

Attention! During the connecting of the motor to the control board, light electric shocks can exist.

Maintenance

Check the MultiDos on faults and wearing on a daily basis. Do this by means of a test on the output of de tubes and electric cables. Check periodical the quantity and calibrate if necessary. When the HanskampQualityTube is worn by intensive use (leaking), replace it according described steps. A repair kit is available by Hanskamp. Also check the rollers and bearings for wear. Also these parts are available as a repair kit by Hanskamp. We recommend to disconnect the rotor when the system is temporarily decommissioned.

Attention! Replace the HanskampQualityTube every year, or after pumping 1000 L of fluid.

Calibration

For calibration: operate the motor manually till the liquid emerges from the nozzle.

Attention! During the first rotations you will not see anything happen, this is because the rotor gets fastened to the axel of the motor.

The MultiDos is calibrated by allowing the feeding computer to emit a pulse ten times. Then you measure the amount of dispended liquid, divide this by 10 and enter this value into the feeding computer. Repeat this procedure every month and also after changing the liquid. This is one of the possibilities for calibration. When the manual of your feeding computer describes another method of calibrating, you need to apply that way of calibrating the MultiDos.

The pump hose works optimally when it has been broken in for a week. Therefore, calibrate again after a week.

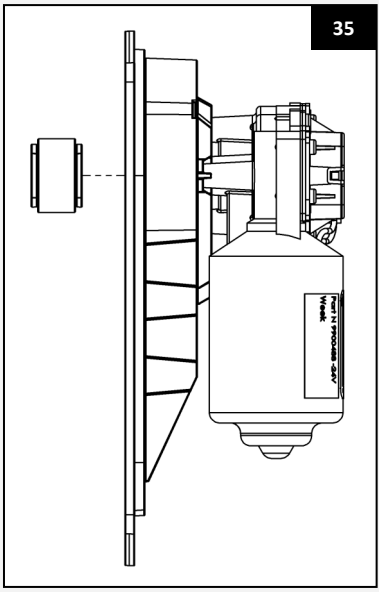
35

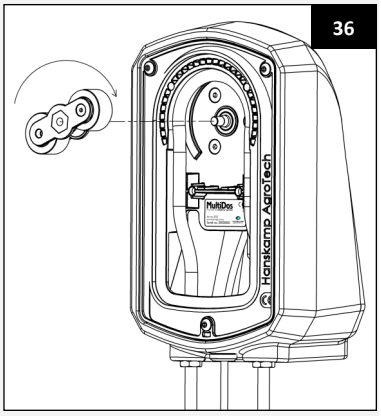

36

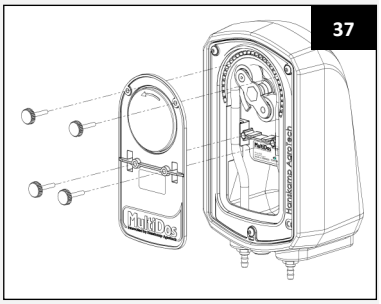

37

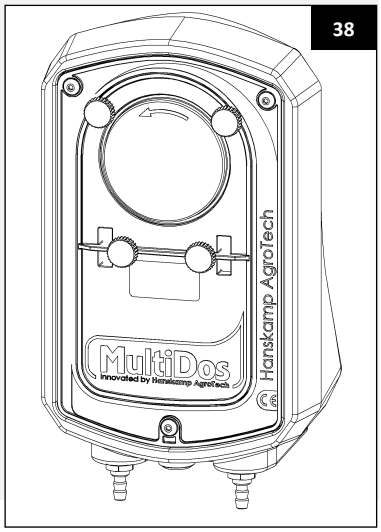

38

Installation instruction Feeding Computer (example):
Nedap: (011-021-000 [360°] or 001-669-000 [120°] motor SolidState5)
Enter these references in the computer:
- Dosage volume: 30 (Equals 3 cc dosage volume of MultiDos.)
- Interval/dispensing speed: 5 sec/0.6kg/min.

Configure the minimum and maximum feed quantity per interval, set in the same ratio as feed type 1 and 2. Thereto don't enter the same numbers, but enter as a ratio of concentrates/ liquid additive.

Configuring a liquid additive is done in the same way as configuring concentrates. Only, the dosing weight is a tenth (1/10) part of the programmed weight.
Example: Programmed feed 3: 0.10 kg is the same as 10 cc liquid additive.
Programmed feed 3: 1.00 kg is the same as 100 cc liquid additive.

Feeding Computer:

Gascoigne Melotte (011-038-000 motor 24V AC 10RPM Time-controlled)
GM 3000
1. Enter liquid additive as an extra feedstuff in the GM3000.
2. Enter its name, 'MultiDos' in the processor.
3. Enter dosage at 1.6 g/sec.
4. Enter minimum running time at 2 sec.
5. Calibration value 60 sec.
6. Close-off time: not applicable.
7. If the process computer cannot work with 1/100 kg, multiply the calibration values and feed doses by 10. See explanation after point 4 'BouMatic'.

Gascoigne Melotte (011-038-000 motor 24V AC 10RPM Time-controlled
ID 2000(+) and MR2000(+)
Key Data
Change the following setting:
06 [enter]: Concentrate ? Yes
07 [enter]: Scale factor 1
08 [enter]: Min. Dispense 3 gram
10 [enter]: Eating speed 10.9 g/sec.

Press the spacebar. The main menu appears again.
Type 16 [enter]: Quit, to exit the ID2000 user program. The ID/MR2000 tools-menu 1.13 appears.

REMARK: When the Scale factor has been changed all data from all ID2000 Main controllers have to be erased and cow data have to be re-entered again.

Feed station Data
Change the following settings:
09 [enter]: Auger? Yes
10 [enter]: Feed dispense 10.00 g/sec.
11 [enter]: Auger stop time 131 msec.

All other feed type(s):
01 [enter]: Auger? Yes

Press the 'Arrow Up' key to select Feed station 2.
Repeat Chapter 3 for all other Feed stations or type 7 [enter]: Entering per batch, to change the settings for a batch of selected feed stations.
Press the spacebar and type 16 [enter]: Quit.

ATTENTION: calculation example is based on 001-669-000 [120°] SS5 engine, with a 011-021-000 [360°] SS5 engine this can be tripled.

DeLaval ALPRO/DELPRO (Motor 011-095-000 AC 28RPM with feedback)
Menu 2:1 or Menu 2:6
In FP204
Menu 2 (F9)
Expected calibration amount:
0.096 kg = ± 96 ml liquid additive after calibration (8 ml x 30 sec (12 revolutions))

Calibration
See 'DeLaval ALPRO/feeding system book'.

In FP204
Menu 4:1
See: DeLaval FP204 feed system user manual.

Boumatic 115V AC (001-436-000 motor bald 10RPM)
1. Enter liquid additive as an extra feed type in the processor.
2. Maximize the intake speed of this feed type.
3. Calibrate according to calibration test results.
4. If the process computer cannot work with 1/100 kg, multiply the calibration values and feed doses by 10.

Configuration for propylene glycol is similar to configuring for concentrates. If the calibration has been multiplied by factor 10, the configuration should also be multiplied by factor 10.

Example: Feed type 3 is configured by 1 kg to equal 100 ml.

Caution! In case of maintenance make sure to always first switch off the voltage and ensure that the storage container is empty.

Disassembly

In case of disassembly all parts should be separated on material type and should be processed in the right type of waste management system.

Caution! When disassembling the MultiDos, there is a risk of clamping danger. Also watch out for slight injuries on the hand, by grasping into the roller mechanism.

When in operation

Caution! During the cleaning of the tubing (flush) and grasping into the roller mechanism with your hands, small injuries can occur on your hand. With an uncovered motor (no cover mounted) watch out for light electric shocks.

Overview of changes made in these installation and operating instruction

No.	Release date	Chapter(s)	Notes
1	08/2014		First edition
1.1	10/2014	All	Apply technical improvements
1.2	12/2014	Configuration	Configuration for multiple feed computers
1.3	01/2015	Article structure	Update + 36000No.
1.4	09/2015	All	General inspection
1.5	09/2015	Attachment 1	Use only 3518 spray nozzle
1.6	01/2016	General comment and maintenance	
1.7	05/2017	All	Article structure changed
1.8	10/2017	All	Art. no. 001-006-000 split up
1.9	08/2019	Multiple	Images replaced
1.9	01/2023	Page 21	UKCA logo added
2.0	03/2023	Page 17 + 29	Motor 011-044-000 removed
2.1	11/2023	Page 16 + 17	Page 16 sentence recalibrate after a week. Page 17 calibration quantity adjusted
2.2	07/2024	Page 13 + 17 + 24 + 29	Page 13: Adjusted images and added DIN rail text for wall mounting. Page 17: Attention added calculation example. Page 24: New exploded view. Page 29: Item numbers added for wall mounting.

Warranty limitations

Costs and expenses resulting from the following are excluded from the warranty:

- Using the equipment improperly, in violation of the specifications in the installation and operating instructions;
- The consequences of any intervention by mechanics other than mechanics approved by Hanskamp for carrying out certain work;
- Incidents such as freezing, ice, fire, flood, flooding or any other problems caused by excessive water, and lightning;
- Defective electrical system or earthing;
- Using compressed air that does not meet Hanskamp's quality standards;
- Damage to the electrical system caused by pests and the like.

The warranty does not apply to consequential damages unrelated to the machine itself. All systems have been tested, However, in the event of defects, Hanskamp AgroTech BV cannot be held responsible for consequential damage.

4. FAQ

Common problem	Possible cause	Solution
The liquid flows back from the pump into the storage tank.	The HanskampQualityTube is leaking. The rollers are worn. The bearing is worn.	Replace the hose. Replace the rollers. Replace the bearing.
The fluid runs out of the nozzle when the engine is idle.	Air infiltration between the pump and the nozzle.	Press the pressure hose onto the nozzle again. Check or improve the seal between the fitting and the nozzle. Mount the nozzle completely vertically.
The motor runs, but does not pump any liquid.	The suction hose is blocked. The impeller is mounted the wrong way round.	Clean the suction hose (if necessary, blast air through it). Install the impeller the other way around.
Leaking feed-through coupling.	The hose is too loose on the fitting.	Fit a hose clamp (art. no. 001-153-000) or a ty-rap around the coupling/hose.

Copyright and disclaimer
The information in this publication is for informational purposes only, and is not intended as a sales quote. The products offered may differ from the images. Any brand or product references in this manual are for identification purposes only. The company and product names mentioned in this manual are trademarks. No part of this publication may be reproduced or made public without the prior written consent of Hanskamp AgroTech BV. Although this publication has been compiled with the greatest care, Hanskamp AgroTech BV is not liable for any damage that may arise due to any errors or omissions it might contain. The Dutch installation and operating instructions are the original installation and operating instructions. Translations into other languages are based on the Dutch installation and operating instructions as a source document. Hanskamp AgroTech BV accepts no liability for differences between the translations. If there are any doubts about the content and accuracy of the translated installation and operating instructions, the Dutch installation and operating instructions shall prevail.

Declaration of incorporation of complete machines IIA

According to Annex IIA of the Machinery Directive 2006/42/EC, for completed machines

We,
Hanskamp AgroTech BV
Broekstraat 17
7009 ZB Doetinchem
The Netherlands,

Authorised compiler(s) of the technical file:

H.J. Hanskamp,

declare under our sole responsibility that the following product:

35000 & 36000 MultiDos (24VAC & 24VDC),
Universal dosing system for liquids,

to which this declaration relates, complies with the provisions of the following directive(s):

- Machinery Directive 2006/42/EC

The product also complies with the provisions of the following standards:

- NEN-EN-IEC 60204-1
- NEN-EN-ISO 12100:2010
- NEN-5509
- NEN-EN 349
- NEN-EN-ISO 13857

If the MultiDos is not connected and the prescribed safety instructions are not used, this Declaration of Conformity is not applicable and no rights can be derived from this declaration.

Doetinchem, the Netherlands, 04-12-2023 H.J. Hanskamp



Appendix 1 Information nozzle holders 003-518-000

003-518-000: Dill holes to mount the hose and nozzle. Insert the hose trough the centre hole and mount the nozzle to the hose. Then mount the nozzle and tighten the bolts.

Caution! Always mount the nozzle vertically.

003-518-000 Nozzle cover

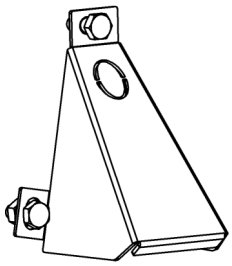

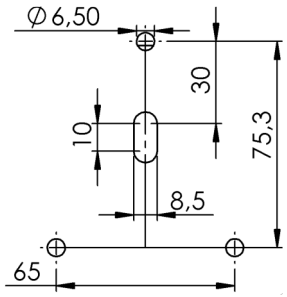

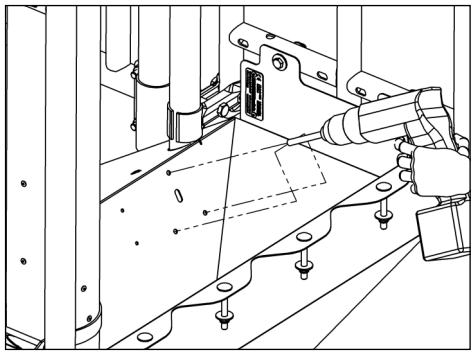

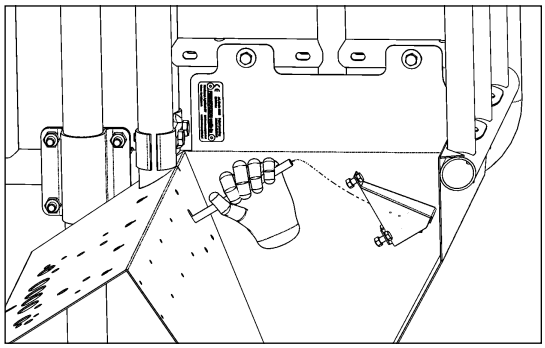

Appendix 2 Article number build-up and exploded view MultiDos pump

Art. no. 035-321-000

Product group	Color	Motor	Type	Version
35 = MultiDos 10RPM 36 = MultiDos 28RPM	1 = Black 2 = Green 3 = Blue 4 = Red 5 = Orange	0 = DC Motor black (bald) 1 = DC SolidState5 2 = AC with feedback ** 3 = RIM time controlled ** 4 = DC IM motor 5 = AC time ctrld without fb. ** 6 = Air controlled* 7 = RIM pulse* 8 = DC 12V grey motor 1001 *	1 = Container + 1 pump 2 = Container + 2 pumps 3 = Housing + 1 pump	0 = HanskampQualityTube C-210-A 3 = HanskampQualityTube BPT 5 = HanskampQualityTube Q-prene

** only used by 35 MultiDos 10RPM

* only used by 36 MultiDos 28RPM

Example: Art. no. 035-321-000 =

- A MultiDos system suitable for DC control (portion dosage);
- Consists of 2 pumps;
- Built in the container (34 l) with blue cover.

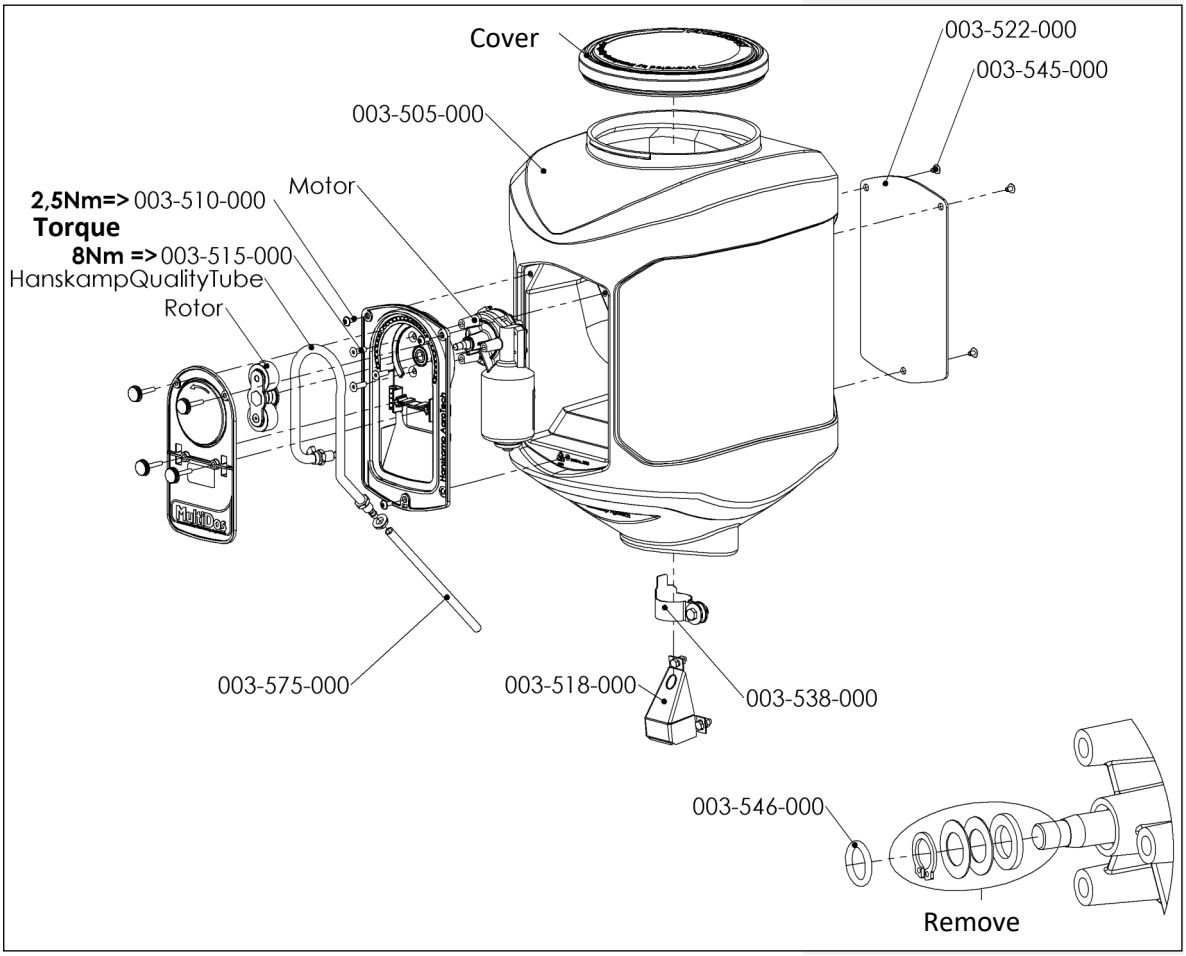

Appendix 3 Exploded view wall mount

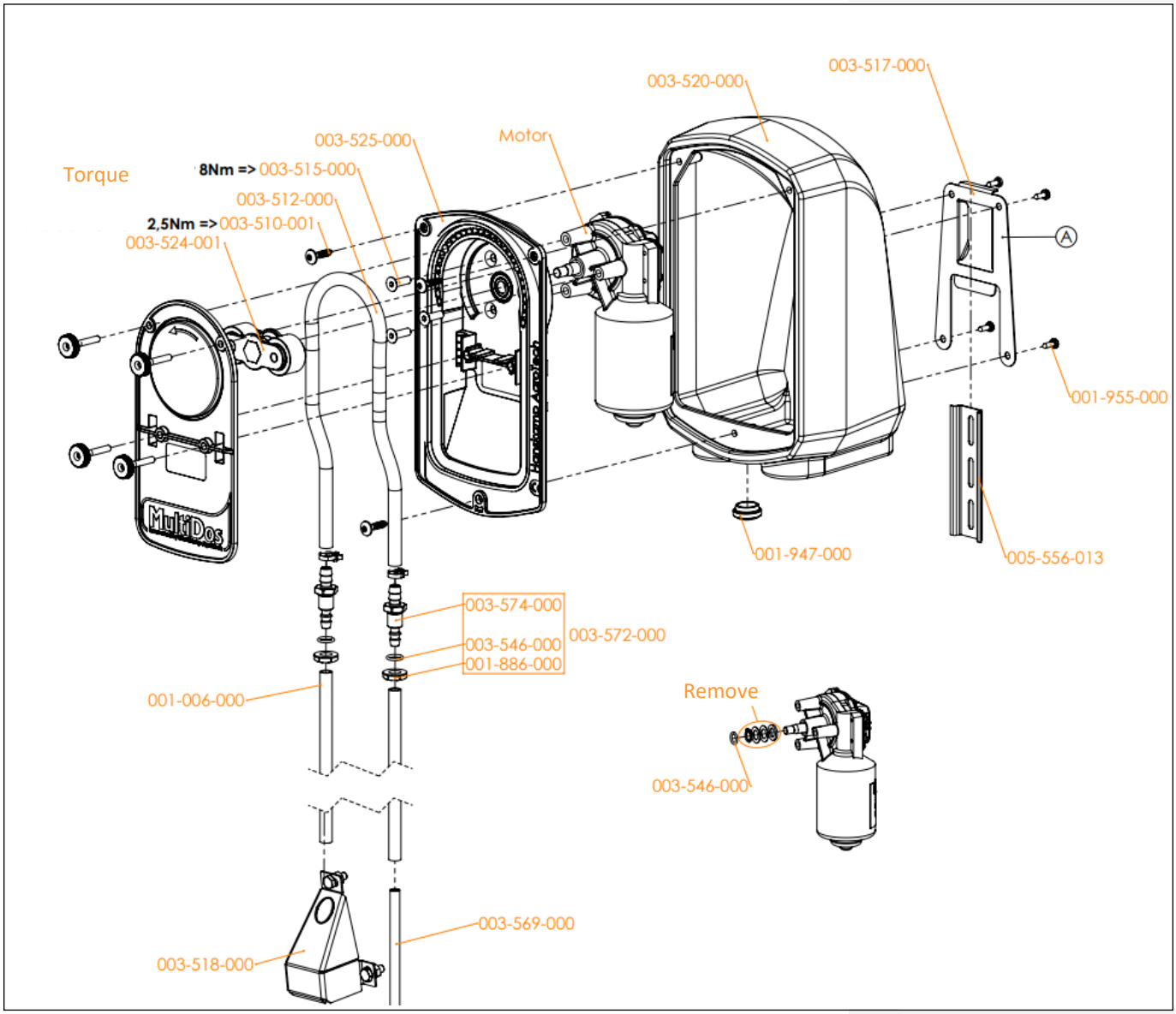

Appendix 4 Exploded view container with 2 pumps & pump MultiDos

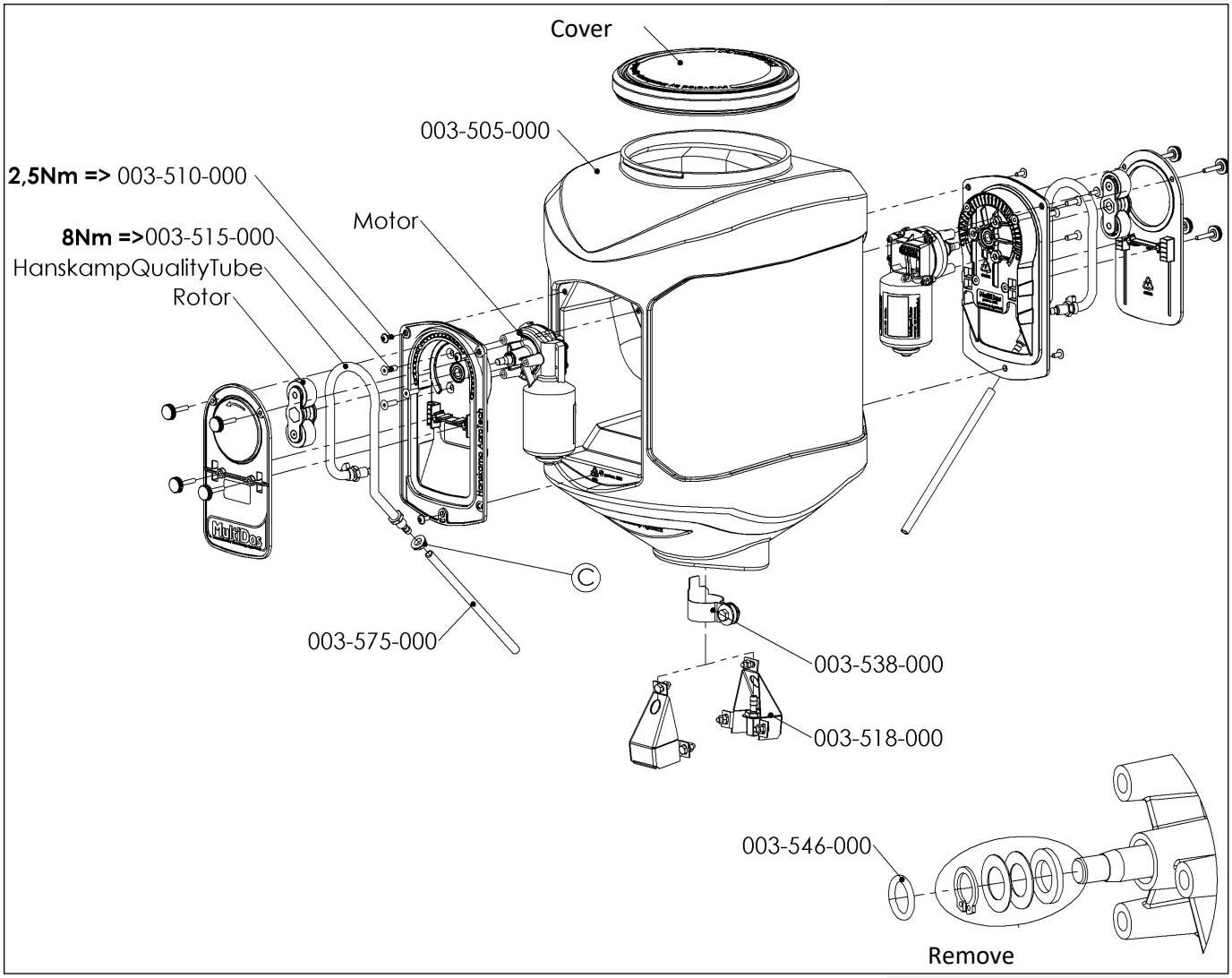

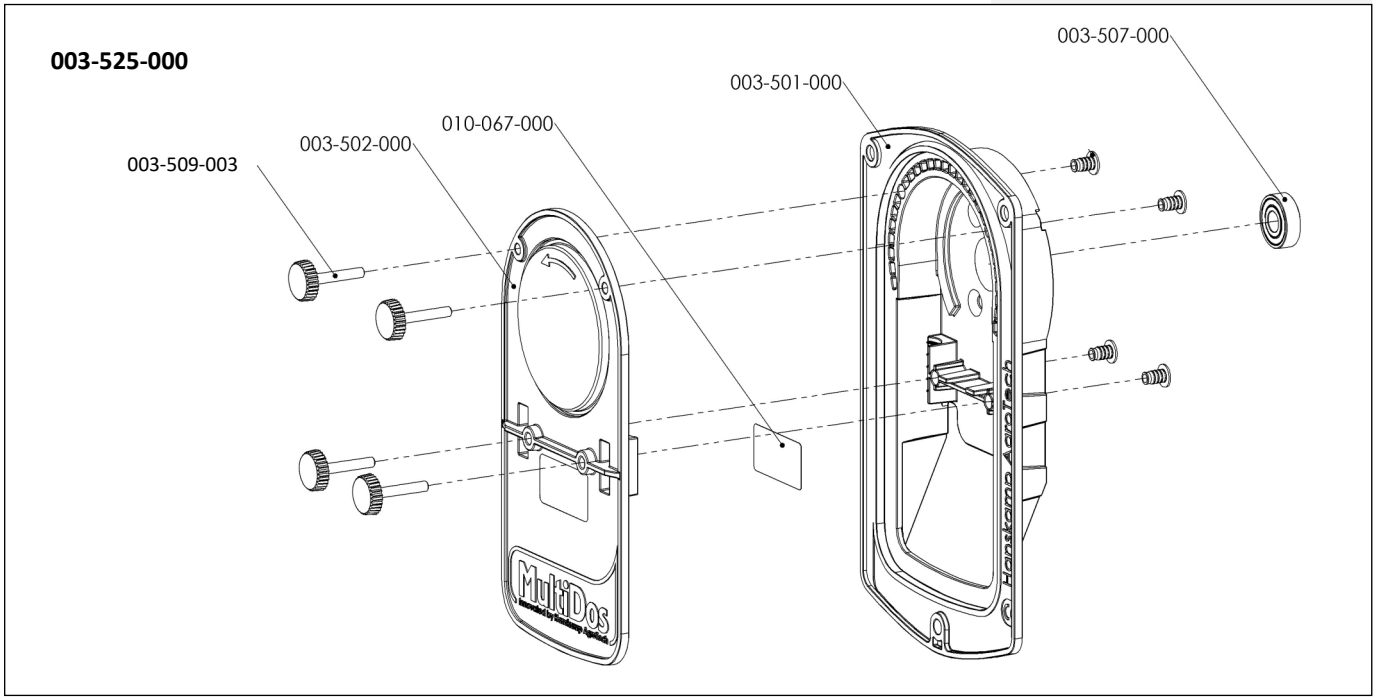

Appendix 5 Exploded view Rotor

003-524-001 only in combination with HanskampQualityTube 003-512-005 (black rollers)

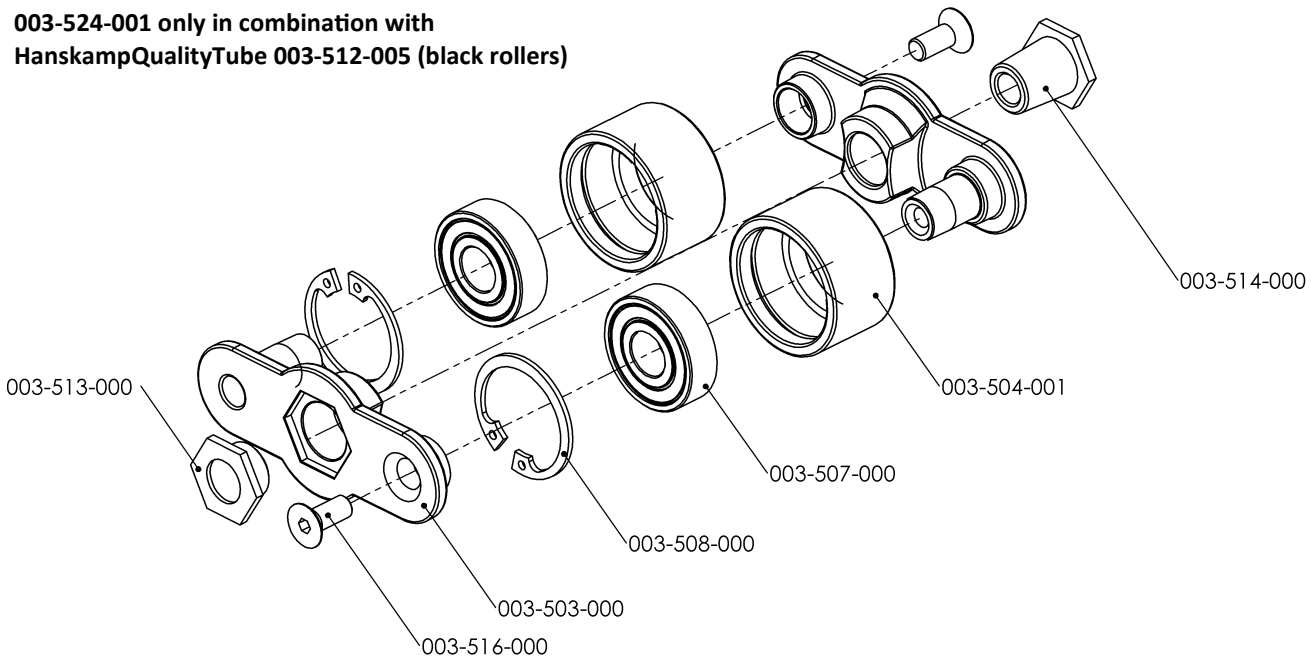

Appendix 6 Hazard warnings an use instructions HanskampQualityTube

003-512-00* HanskampQualityTube
Warnings and usage instructions for dealers, sellers and users of the MultiDos.

Caution! The HanskampQualityTube is not intended for medical use!

Read these warnings and instructions carefully before use or resale of the MultiDos.

The following warnings and instructions must be followed to prevent breaks or leaks in the hose, which could result in damage to property and/or personal injury during use.

Warnings

1. The HanskampQualityTube is made of thermoplastic, and its performance depends on the temperature and pressure.
2. Some liquids can be absorbed or extracted by the HanskampQualityTube. The end user is responsible for observing and documenting the specifications, safety regulations and documentation of the HanskampQualityTube.
3. The end user is responsible for determining the suitability of the hose formulation for the application.
4. The HanskampQualityTube is not intended or suitable for medical applications. The use of this hose in a medical application is the sole responsibility of the dealer and/or end user.
5. To avoid catastrophic disconnection during use, detachable clamps must always be used when attaching the hose to a coupling or fitting.
6. The end user is advised to have a back-up system available in case the hose ruptures.
7. No hose will last forever, and this also applies to hoses used in the MultiDos; following prolonged use or improper installation, the hose will rupture.

The following factors will affect the service life of the HanskampQualityTube in the MultiDos liquid pump:

- The liquid being pumped;
- Percentage closure of the hose wall;
- Pump speed (in combination with roller strokes per minute) and total number of strokes;
- System back pressure;
- Temperature of the fluid being transported and ambient temperature;
- Frictional resistance due to deficient maintenance or wear on the rollers and guides;
- Twisted, kinked or excess length of the HanskampQualityTube installed in the MultiDos;
- Wall thickness and thickness variation.

To prevent any damage to property, or consequential damage, always do the following when using the HanskampQualityTube in the MultiDos pump:

- Carefully set up and monitor each of the factors mentioned above while using the HanskampQualityTube in the MultiDos;
- Read and respect the instructions of Hanskamp (manufacturer) or dealer of the equipment and the MultiDos with regard to installation, use, maintenance and disassembly;
- Inspect the HanskampQualityTube for damage before installation;
- Check the HanskampQualityTube is the correct length, and that the hose is not installed twisted or kinked in the MultiDos;
- Constantly check the hose circuit for signs of breaks or leaks in the HanskampQualityTube, and take action if necessary.

Material safety data sheets are always available from Hanskamp.

Appendix 7 Loose parts

For maintenance or for whatever reason it is possible to separate parts be ordered from your dealer. Please use therewith as are indicated. Below the drawing item numbers.

Parts 003-525-000 Pomp MultiDos		
Art. no.	**Description**	**Quantity**
003-501-000	Pump housing MultiDos	1
003-502-000	Cover pump MultiDos	1
003-507-000	Bearing 6000RS 10x26x8	1
003-509-001	Knurling Bolt M5x29 A2	4

Parts MultiDos wall mount version		
Art. no.	**Description**	**Quantity**
001-006-002	PVC hose, 2 meter, Ø7x10	1
001-006-005	PVC hose, 5 meter, Ø7x10	1
001-947-000	Membrane grommet	1
003-510-000	Socket screw with flange M5x10	3
003-515-000	Countersunk Hexagon socket screw M6x20	3
003-518-000	Spray nozzle complete for MultiDos	1
003-569-000	Suction tube Ø8x1 AISI304 L=300 mm	1
003-517-000	Wall bracket for wall mounting 1mm	1
005-556-013	DIN rail l=110 mm	1
001-955-000	Sheet metal screw Ckkk 4x13 stain-less steel A2	4

HanskampQualityTube		
Art. no.	**Description**	**Quantity**
003-512-000	HQ 0.53m incl. mounting fittings	1
003-512-002	BPT 0.53m incl. mounting fittings	1
003-512-005	Q-prene 0.53m incl. mounting fittings	1

Color options wall mount	
Art. no.	**Description**
003-520-000	Wall mount MultiDos Black with 3 inserts
003-540-000	Wall mount MultiDos green with 3 inserts
003-541-000	Wall mount MultiDos blue with 3 inserts
003-542-000	Wall mount MultiDos red with 3 inserts
003-543-000	Wall mount MultiDos orange with 3 inserts

Motors (add art. no. 003-546-000 O-ring 10x2)		
Follow. no.	**Art. no.**	**Description**
035-*0*-00*	001-436-000	Motor black 10RPM
035-*1*-00*	001-669-000	Motor SolidState5 17RPM 120°
035-*3*-00*	011-091-000	RIM motor 8RPM 24VAC with feedback
035-*4*-00*	011-030-000	Intelligent motor 17RPM 120°
035-*5*-00*	011-038-000	Motor 24VAC 10RPM time con-trolled
036-*0*-00*	001-434-000	Motor black 28RPM
036-*1*-00*	011-021-000	Motor SolidState5 28RPM
036-*4*-00*	011-095-000	RIM motor 28RPM 24VAC with feedback
036-*4*-00*	001-652-000	Intelligent motor 28RPM
036-*7*-00*	011-125-000	RIM motor 28RPM 24VAC/DC pulse controlled, with feedback
036-*8*-00*	001-001-000	Silver motor 40RPM 24V DC

Parts 003-524-000 / 003-524-001 rotor MultiDos 003-524-000* 003-524-001**		
Art. no.	**Description**	**Quantity**
003-503-000	Rotor MultiDos complete red	2
003-504-000	Plastic roller Ø35.0mm*	2
003-504-001	Plastic roller Ø31.6mm black**	2
003-507-000	Bearing 10x26x8	2
003-508-000	Circlip DIN 472 J026x1.2 A2	2
003-513-000	Conical brass adapter MultiDos	1
003-514-000	Adapter SW17 M8 MultiDos	1
003-516-000	Countersunk Hexagon socket screw M5x10 DIN 7991 A2	2

Parts MultiDos Container version 1 / 2 pumps		
Art. no.	**Description**	**Quantity**
001-006-005	PVC hose, 5meter, Ø7x10	1 / 2
003-505-000	Container MultiDos 32 L	1
003-510-000	Socket screw with flange M5x10	3 / 6
003-521-000	Mounting pipe MultiDos 1¼"	1
003-522-000	Blind plate MultiDos	1 / 0
003-518-000	Spray nozzle complete	1 / 2
003-538-000	Container fixer band	1
003-545-000	Socket screw with flange M5x8	3 / 0
003-575-000	Pvc suction tube container Ø7x10 L=20 cm	1 / 2

Color options Container	
Art. no.	**Description**
003-506-000	Cover container MultiDos, black
003-530-000	Cover container MultiDos, green
003-531-000	Cover container MultiDos, blue
003-532-000	Cover container MultiDos, red
003-534-000	Cover container MultiDos, orange

Hanskamp AgroTech BV
Broekstraat 17
7009 ZB Doetinchem
The Netherlands
Tel: +31 (0)314 - 393 797
Fax: +31 (0)314 - 393 826
info@hanskamp.nl
www.hanskamp.com

Also take a look at:

