MultiDos HighSpeed 37000

Liquid Dosing system
Vloeistof Doseersysteem
Flüssigkeit Dosiersystem
Doseur de liquides

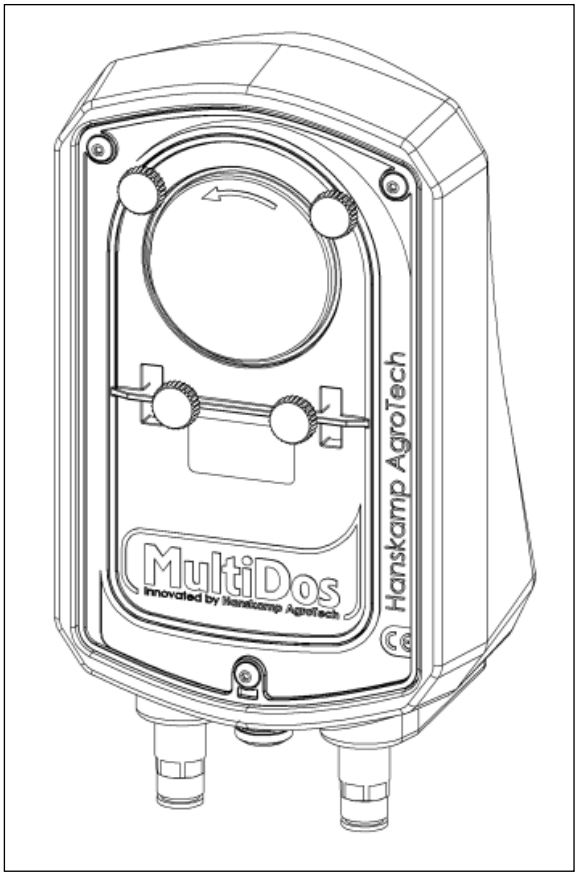

Installation and operating instructions **EN**

HANSKAMP
Innovation for dairy farming

Item number: 010-123-000

Date: Nov 2020
Version 2.1 - Translation of original instructions for use
According to Annex VIIA of machine directive 2006/42/EG, for completed machinery

Doetinchem,
The Netherlands
www.hanskamp.nl/en

Preface

Manual Contents

This manual contains the information necessary for the correct installation and operation of a Hanskamp MultiDos HighSpeed.
Study and understand this information thoroughly before configuration of the MultiDos HighSpeed. Failure to do so could result in damage to equipment. Please consult your milking equipment dealer if you do not understand the information in this manual, or if you need additional information.
All information in this manual has been compiled with care. Hanskamp shall not be liable for errors or faults in this manual. The recommendations are meant to serve as guidelines. All instructions, pictures and specifications in this manual are based on the latest information that was available at the time of publication. Your MultiDos HighSpeed may comprise improvements, features or options that are not covered in this manual.

Applicability

The table below shows the type numbers of the MultiDos HighSpeed for which this manual is applicable.

Model designation

Model	Type number
MultiDos Wall mount assembly HighSpeed	37003

Contact number Local Service Provider

We suggest you write the name, address, telephone number an E-mail address of your local service provider contact in the table below. This makes sure you can easily find the information.

Name	
Address	
Telephone number	
E-mail address	

1. Introduction

MultiDos HighSpeed by Hanskamp, a proven, sustainable technique enabling you to very easily dose the right quantity of liquids per day and per cow. Smart, fast and affordable. MultiDos HighSpeed doses liquid propylene glycol like gravy on top of the feed chunks. And cows love it!

The information in this manual is for farmers and technicians.

- Dairy farmers use the information to test and adjust the MultiDos HighSpeed or to list overviews.
- Technicians use the information to install and setup the MultiDos HighSpeed.

2. Safety

2.1 Introduction

The safety alert symbol identifies important safety messages on your MultiDos High-Speed and in the manual. When you see this symbol, be alert to the possibility of personal injury or death. Follow the instruction of the safety message.



Safety Alert Symbol

2.2 Signal Words

Note the use of the signal words **DANGER**, **WARNING** and **CAUTION** with the safety messages. The signal word for each message uses the following guidelines:



Warning! *Indicates a potentially hazardous situation that, if not avoided, could result in death or serious injury, and includes hazards that are exposed when guards are removed.*



Danger! *Indicates a imminently hazardous situation that, if not avoided, will result in death or serious injury.*

2.3 Safety Instructions

You are responsible for the safe operation and maintenance of your MultiDos High-Speed. You must make sure that you and anyone else who is going to operate, maintain or work in the vicinity of the MultiDos HighSpeed knows all the related safety information in this manual.
You are the key to safety. Good safety practices protect you and the people around you. Make these practices a working part of your safety program. Make sure EVERYONE who operates, maintains or works near the MultiDos HighSpeed obeys the safety precautions. Do not risk injury or death by ignoring good safety practices.

- MultiDos HighSpeed owners must train operators before they operate the MultiDos HighSpeed. This training must be repeated at least annually.
- The operator must read, understand and obey all safety and operating instructions in the manual.
- A person who has not read and understood all safety and operating instructions is not permitted to operate the MultiDos HighSpeed.
- Do not modify the equipment in any way. Unauthorized modification may impair the function and/or safety and could affect the life of the equipment, and persons.
- Only use approved spare parts, and make sure they are only installed by authorized technicians.

2.3.1 General Safety

- Read and understand the manual and all safety signs before you connect power supplies to operate or adjust the MultiDos HighSpeed.
- Only trained persons are permitted to operate the MultiDos HighSpeed. A first-aid kit must be available near the MultiDos HighSpeed. Store in a highly visible place.
- Install all protective covers and guards before you operate the MultiDos HighSpeed.
- Wear the correct protective clothing and equipment.
- Disconnect and isolate the electrical power supply before you clean or do maintenance on the MultiDos HighSpeed.
- Know the emergency medical centre number for your area.
- Contact your nearest milking equipment dealer provider if you have any questions.
- Review safety related items with all operators frequently (annually).

2.3.2 Electrical Safety

- Only an authorized electrician must install the electrical power supply for the MultiDos HighSpeed.
- Make sure the electrical grounding of the electrical system and all parts of the MultiDos HighSpeed meet the local rules and regulations.
- Replace any damaged electrical lines, conduits, switches and components immediately.
- Isolate the electrical power supply before you open the MultiDos High-Speed to work on the electrical system.

2.3.3 Installation Safety

- Read and understand the instructions in this manual.
- Make sure the MultiDos HighSpeed is correctly installed.

2.3.4 Operating Safety

- Read and understand the applicable manual and all safety signs before you connect power supplies to operate or adjust the MultiDos HighSpeed.
- Only trained persons are permitted to operate the MultiDos HighSpeed.
- Switch off the electrical power supply by taking plug out of the power point and secure the plug before you clean or do maintenance on the MultiDos HighSpeed.
- Install the covers and guards before you operate the MultiDos HighSpeed.
- Keep hands, feet, hair and clothing away from all the electrical parts.
- Keep unauthorized persons, especially small children away from the MultiDos HighSpeed at all times.
- Before the electrical supply is attached to the MultiDos HighSpeed, make sure all parts are tight and that all the parts are in good condition.
- Contact your nearest milking equipment dealer if you have any questions.

2.3.5 Maintenance Safety

- Read and understand the applicable manual and all safety signs before you connect power supplies to operate or adjust the MultiDos HighSpeed.
- Only trained persons are permitted to maintain the MultiDos HighSpeed.
- Switch off the electrical power supply by taking plug out of the power point and secure the plug before you clean or do maintenance on the MultiDos HighSpeed.
- Wear protective clothing and safety goggles when you do work on the electrical system.
- Make sure all the covers and guards are installed when maintenance work is complete.

2.3.6 Safety Decals

- General safety messages appear in this safety messages section. Specific safety messages are in applicable parts of this manual when potential hazards may occur if the instructions or procedures are not followed.

3. Installation instruction

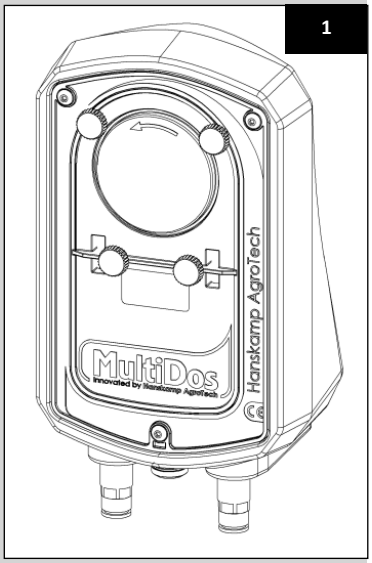

General comment:
The Hanskamp MultiDos HighSpeed-dosing system is a liquid dosing system. The MultiDos HighSpeed is suitable for fluids with a low viscosity like Glycerine and Propyleen glycol. The MultiDos HighSpeed is not suitable for fluids with a high viscosity for example molasses. The MultiDos HighSpeed can also as the PipFeeder and other Hanskamp dosators be linked to any general feed system. This instruction will help you to install the MultiDos HighSpeed system (figure 1). Read this instruction carefully and follow the safety instructions. Examples of installation can be found at www.hanskamp.nl/en.

Order numbers and names of accessories can be found in the attachment.

Transport and storage:
A complete MultiDos HighSpeed system set consists out of a MultiDos HighSpeed wall mount, a pressure hose, suction hose and a nozzle. The wall mount will be send in a box. These boxes can be put on each other on a pallet.

Please note! Always use an appropriate vehicle (forklift truck, pallet fork, pump truck, etc.) to move the pallet.
Please note! Parts may fall off the pallet when it is being unpacked.

Safety:
The user and installer are solely responsible for the safe operation and maintenance of the MultiDos HighSpeed system. In case of changing the HanskampQualityTube of the pump (art. no. 003-512-005), always disconnect the electric system, to prevent dangerous situations.

Type description;
to be found on the pump housing

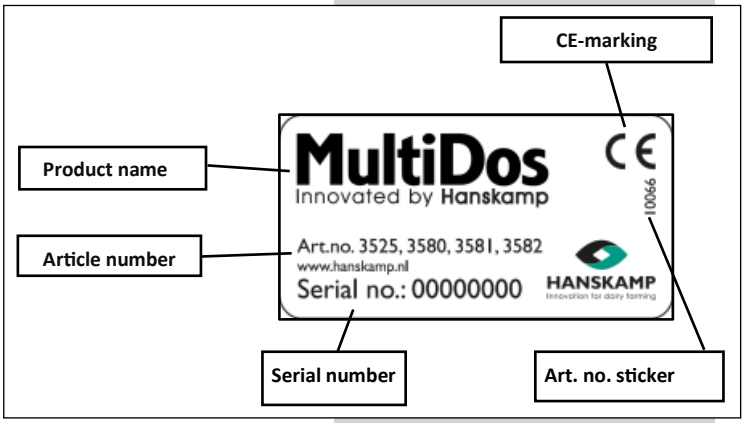

Important: *do not remove stickers!*

Maintenance of the stickers:
- Keep the safety stickers clean and legible.
- Clean the safety stickers with soap and water.
- Do not use any solvents or abrasives that could damage the safety stickers.
- Replace missing or illegible safety stickers.
- Safety stickers are obtainable from Hanskamp. Always specify the item numbers in correspondence.

Wall mount assembly

1. Check that all components are present according to the parts list.
2. Unscrew the outermost 3 socket screws (art. no. 003-510-000) from the MultiDos HighSpeed-pump and remove the pump.

Note! Install the housing within 2 metres from the bottom of the storage tank.

There are two ways to mount the MultiDos HighSpeed.

3a. Mount it to the wall:
Drill holes into the back of the MultiDos HighSpeed as illustrated in figure 3. The distance required between the holes is illustrated in figure 5. Attach the wall mount (fixings not included).

3b. Mount it to a background:
Drill holes into the bottom of the MultiDos HighSpeed. You can determine the placement of the holes yourself; the minimum distance between the hoses and plate is illustrated in figure 4. Attach the wall mount (fixings not included).

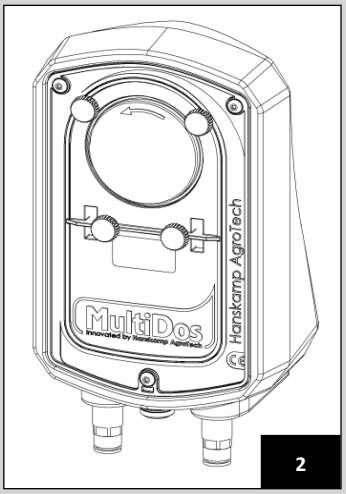

2

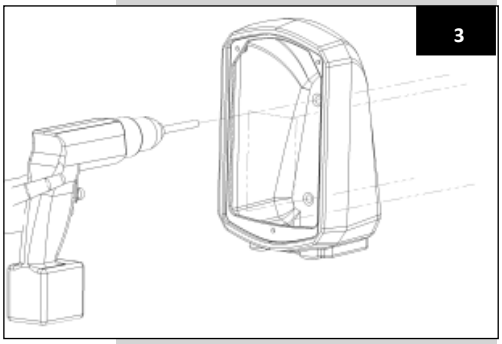
3

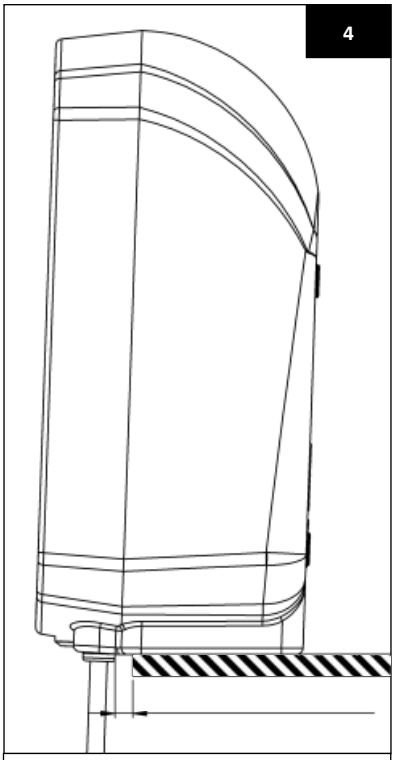
4

Distance between the tube and the plate: ± 8mm

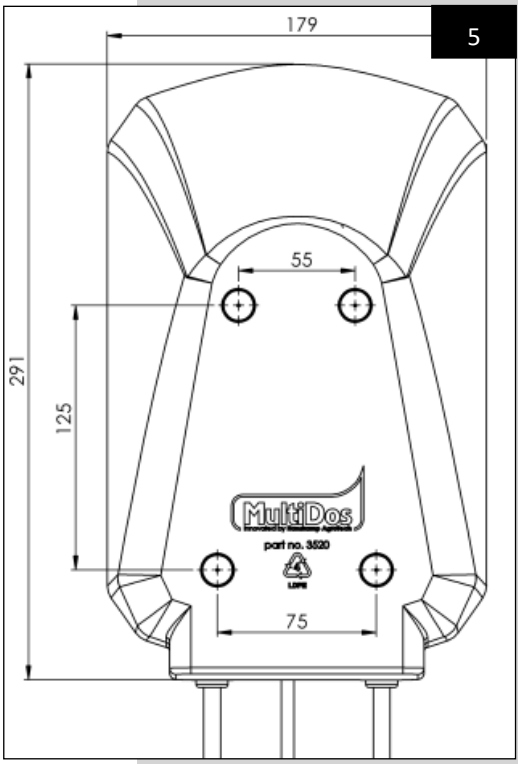

5

4. Unscrew the lid of the pump housing.
5. Make a hole in the middle nozzle with a small, flat screwdriver. Push the engine cable (art. no. 001-753-000) through the nozzle. Connect this cable to the engine using 2 Wago clamps (art. no. 001-875-000). (Brown to red and white to green.) Connect the cable to the corresponding control system. For correct installation, refer to the installation manual for the corresponding control unit. Do this when the installation is complete.
6. Mount the following items: 001-453-000, 001-486-000 and 011-021-000 as illustrated in figure 7.
7. Use the accompanying screws (art. no. 003-510-000) to fix the pump housing to the wall mount.
8. Unscrew the rotor from the motor and remove it from the motor shaft by pulling it upwards.

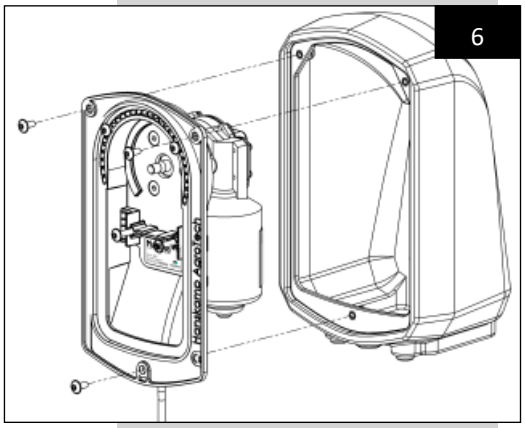

Caution! Turning the rotor by hand can cause minor injuries to the hand.

Note: Hanskamp only guarantees correct operation if the suction hose is 2 metres or less.

Note: PVC hose is not suitable for acids. A hose kit suitable for acids can be ordered from Hanskamp upon request.

Note: Always cut the hose square. If the hose is cut obliquely it can adversely affect operation.

Note: Make sure the end of the hose is placed at the very bottom of the storage tank, otherwise the pump will not be able to pump up all the liquid.

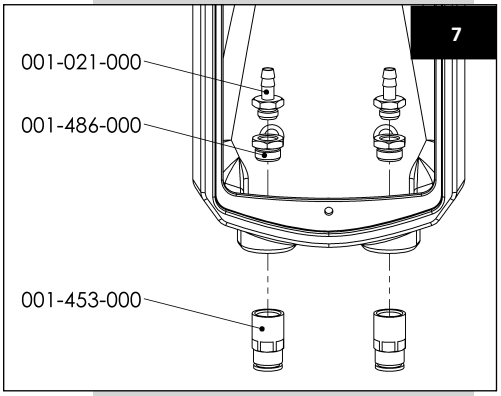

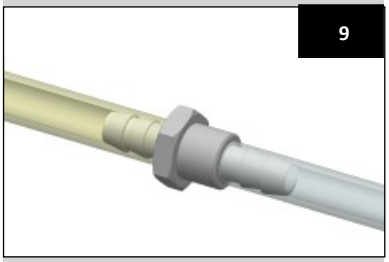

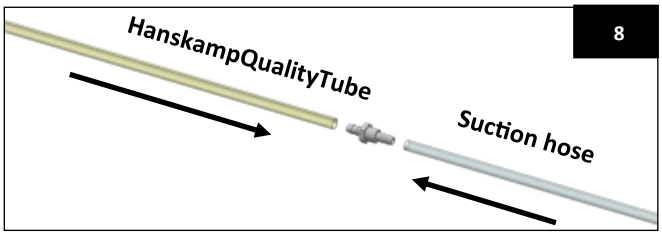

9. Take the right end of the HanskampQualityTube and place it on the hose tailpiece (art. no. 001-021-000) (figure 10).
10. Bend the HanskampQualityTube round and slide it over the hose tailpiece (art. no. 001-021-000) on the left side.
11. Attach the suction hose (art. no. 082-254-100 max. 2 metres) to the right side of the insert coupling.
12. Insert the pressure tube (art. no. 082-254-100) into the insert coupling, making sure it is fully inserted to prevent leakage.
13. Bend the HanskampQualityTube into the shape of the pump housing as much as possible (figure 12).

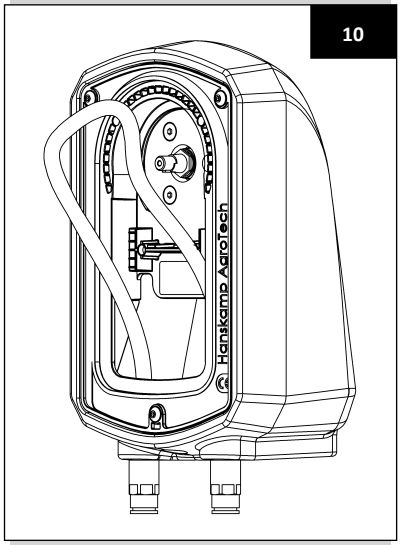

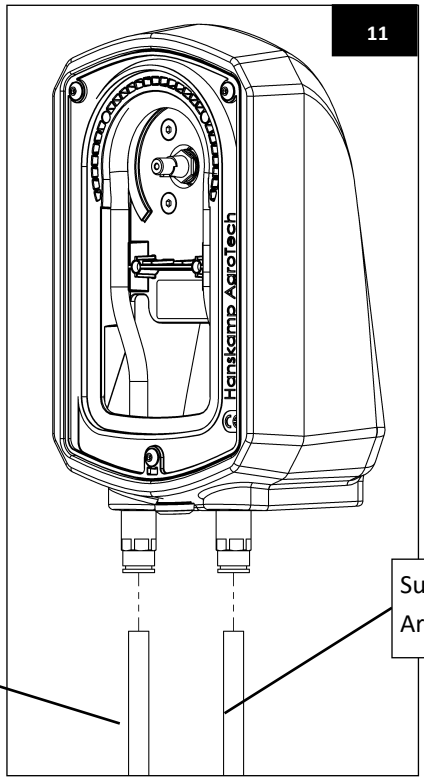

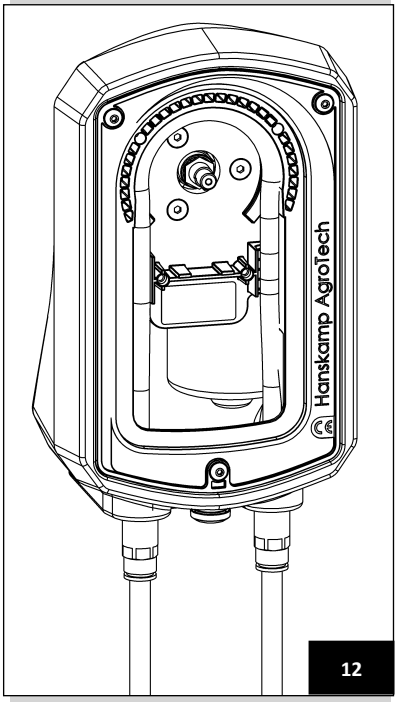

14. Mount the rotor onto the shaft of the pump motor as illustrated in figure 13. Push the HanskampQualityTube in between the rollers and the pump housing with a turning motion. The HanskampQualityTube is now wedged between the rollers and the pump housing.

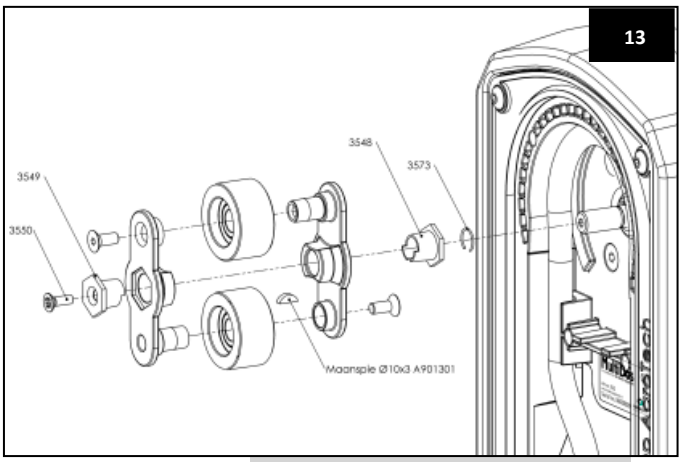

13

Note: the tube must be as tightly packed as possible in the curve of the pump housing.

15. Take the transparent pump lid (art. no. 003-502-000) and the 4 corresponding knurling bolts (003-509-001). Position the lid so that it is immediately in front of the opening of the pump housing. Tighten the screws evenly until the lid is secure. Note: tight is tight! (figure 15).

16. Connect the motor of the MultiDos HighSpeed to the corresponding control system. Disconnect the feed station control board from the power supply before connecting the motor cable.

Caution: Light electric chocks can occur when connecting the motor to the control board.

Maintenance:
Check the MultiDos HighSpeed system daily for malfunctions and wear. Perform a visual inspection of the supply and discharge hoses and electrical wiring. Periodically check the dispensing quantity and calibrate if necessary. If the HanskampQualityTube is worn out (leaky) due to intensive use, replace it according to the prescribed steps. An overhauling set is available from Hanskamp. Check the rollers and bearings for wear as well. These are also available from Hanskamp if necessary.

Calibration:
Before calibration, manually control the motor until the liquid comes out of the nozzle.

The MultiDos HighSpeed can be calibrated by having the feed computer send out a pulse 10 times. Then measure the dispensed liquid and divide it by 10, enter this value into the feed computer. Repeat this procedure once a month and after changing liquid. Liquid concentrate is distributed simultaneously with normal concentrate over the entire active period of the day. Refer to your feed computer's manual on how to use the feed curve. This is one of the calibration methods. If the calibration method is described differently in your feed computer's manual, you should apply that calibration method to the MultiDos HighSpeed.

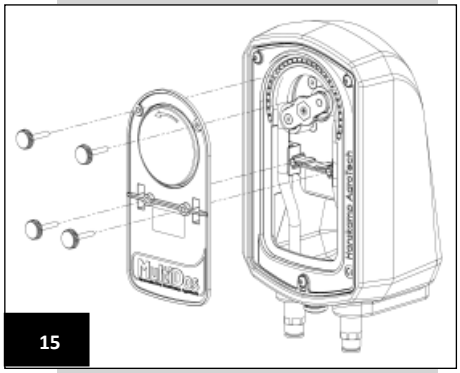

15

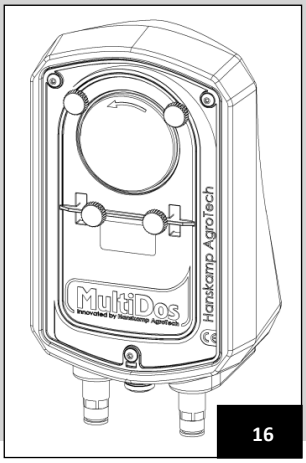

16

Please note! In case of maintenance make sure to always first switch off the voltage and ensure that the storage container is empty, to prevent light electric shocks.

Disassembly:
In case of disassembly all parts should be separated on material type and should be processed in the right type of waste management system.

Please note! When disassembling the MultiDos HighSpeed, there is a risk of clamping danger. Also watch out for slight injuries on the hand, by grasping into the roller mechanism.

Please note! During the cleaning of the tubing (flush) and grasping into the roller mechanism with your hands, small injuries can occur on your hand. With an uncovered motor (no cover mounted) watch out for light electric shocks.

Overview of included changes in this installation-and operating instruction:

No.	Release date	Chapter(s)	Notes
1	09/2015		First edition
2	08-2018	All	Replace couplings
3	10-2019	Multiple	Replaced images

Warranty limitations:
The warranty excludes costs and expenses due to:

- Incorrect use of the equipment, not in accordance with the specifications in the instructions for installation and use;
- The consequences of any intervention by engineers other than engineers recognised and approved by Hanskamp for carrying out service, maintenance and other technical work;
- Incidents such as freezing, ice, fire, flooding, inundation or any other form of extreme water damage, and lightning;
- Defects in the electrical system or grounding system;
- Damage to the electrical system due to vermin and so forth.

The warranty is not applicable to consequential damage that is not related to the machine itself. All systems have been tested. However, Hanskamp cannot be held liable for consequential damages in the event of malfunctions.

Copyright and disclaimer
The information given in this publication is provided for information purposes only and does not constitute an offer for sale. The products supplied may differ from those illustrated. No part of this publication may be reproduced or made public without prior permission in writing from Hanskamp AgroTech BV. Although this publication was put together with the utmost care, Hanskamp AgroTech is not liable for any damage that might arise due to errors or gaps in this publication.
The instructions for installation and use in Dutch are the original instructions for installation and use. The translations into other languages have used the Dutch instructions for installation and use as the source document. Hanskamp AgroTech does not accept any liability for differences between the translations. If there are doubts about the content and accuracy of the translated instructions for installation and use, the Dutch instructions for installation and use constitute the authoritative document.

4. FAQ

Common problem	Possible cause	Solution
The liquid runs from the pump back in the stock barrel	Leaking tube, worn rollers, worn bearings	Replace the tube, replace the rollers, replace the bearing
Liquid runs out of the nozzle while the motor doesn't run	False air between the pump and the nozzle or nozzle is not mounted vertically	Press the hose on the nozzle again, check/ improve the sealing between the coupling and nozzle again, mount the nozzle 100% vertical
The motor runs but it doesn't pump any liquid	The suction tube is closed, rotor is installed the wrong way	Clean the suction tube (possibly by blowing), install the rotor in the right way
Leaking feed-through coupling	Hose too loose on the coupling	Mount a hose clamp (art. No. 003-547-000) on the coupling/hose

Declaration of incorporation of completed machinery IIA
(According to annex VIIA of machine directive 2006/42/EC, for completed machinery)

We,
Hanskamp AgroTech BV
Broekstraat 17
7009 ZB Doetinchem
The Netherlands

Authorised compiler(s) of the technical dossier:

H.J. Hanskamp

State, entirely under their own responsibility, that the product**:**

37000 MultiDos HighSpeed (24VDC)
Universel dosing system for liquids

to which this declaration pertains, does meet the stipulations of the following directive(s):
- Machine Directive 2006/42/EC

and completely or partially meets the following essential requirements and that the relevant technical documents were drawn up in accordance with **Annex VIIA**. The product also complies with the stipulations in the
following annex(es):

NEN-EN-IEC 60204-1
NEN-EN-ISO 12100:2010
NEN-5509
NEN-EN 349
NEN-EN-ISO 13857

We call your attention to the fact that where a MultiDos HighSpeed has not been installed or has not been installed in accordance with safety measures in these installation and operating instructions, this declaration of stipulations is null and void and so no rights can be derived from this declaration.

The Netherlands, Doetinchem 01-10-2019 H.J. Hanskamp



Annex 1: Information nozzle holders 003-533-001

Drill holes to mount the hose and nozzle, insert the hose through the center hole and mount the nozzle to the hose.

Attention! Always mount the nozzle vertically.

003-533-001
Shielded installation

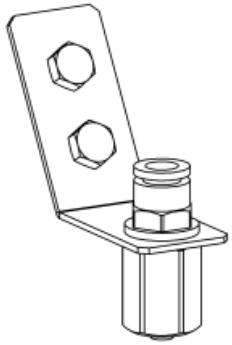

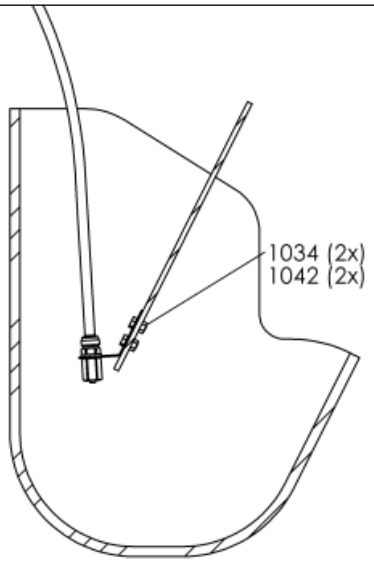

Note: the liquid must not be dosed over the nose of the cow.

Hole distances 003-533-000

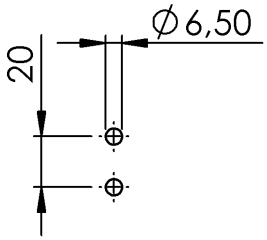

Shielded installation; cow can't reach nozzle.

Annex 2: Articlenumber build-up and exploded view MultiDos HighSpeed

Art. Nr.: 037-323-000

Productgroup:	Color:	Motor:	Type:
037 = MultiDos HS	1 = Black 2 = Green 3 = Blue 4 = Red 5 = Orange	1 = DC 120RPM (no longer available) 2 = DC 200RPM	3 = wallmount typ

Example: Art. Nr.: 037-323-000 =

- A MultiDos HighSpeed 200RPM 24VDC
- Consists of 1 pump;
- Built in blue wall mount cover

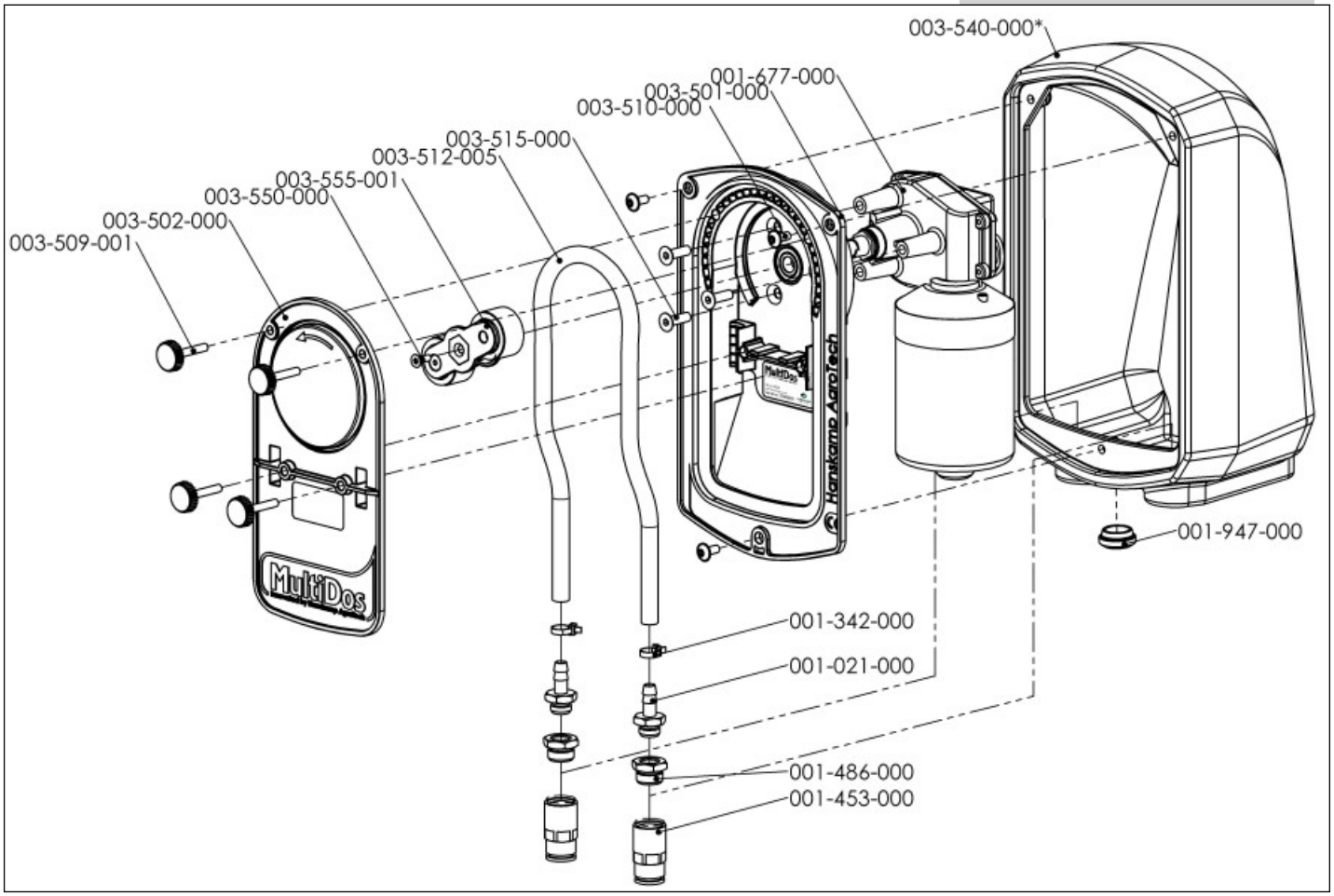

Annex 3: Hazard warnings an use instructions HanskampQualityTube

003-512-00* HanskampQualityTube
For (milkingmachine) dealers, resellers and users of the MultiDos HighSpeed.

Attention! Not intended for medical use!

Please read carefully prior to using or reselling.

The next warnings and regulations need to be followed to prevent fractures in- and leaking of the hose, which can result into material and/or physical damage to humans an/or animals.

Warning:

1. The HanskampQualityTube is made of 'Thermoplastic Material', and as such, the performance is affected by temperature and pressure.
2. Some fluids can be absorbed by tubing material or can extract substances from the HanskampQualityTube. It is the responsibility of the end user to specify and document tubing performance and safety requirements.
3. It is the responsibility of the user to determine suitability of tubing formulation for each application.
4. The HanskampQualityTube is not intended or recommended for medical applications. The use of this product in any medical application is solely the responsibility of the (milking machine) dealer and/or end user.
5. To avoid catastrophic disconnecting during use, always use retaining clamps or adhesives when affixing tubing to fittings and/or connectors.
6. The end user should have system back up and adequate procedures in case of tubing rupture.
7. No tubing will last forever. This is especially true in the MultiDos HighSpeed where, upon extended use or improper installation, the tubing will rupture.

The following factors have been found to influence HanskampQualityTube life in the MultiDos HighSpeed liquid pump:

- Fluid being pumped/transported.
- Percentage occlusion of tubing walls.
- Pump speed (i.e. roller impacts/minute) and total number of impacts.
- Amount of system back pressure.
- Temperature of fluid being transported as well as temperature of the operating environment.
- Frictional drag due to improper maintenance or wearing of rollers and guides.
- Twisting, kinking, or excess lengths of the HanskampQualityTube installed in the MultiDos HighSpeed.
- Wall thickness and thickness variation.

To avoid possible property damage or injury resulting therefrom, when using of the HanskampQualityTube in the MultiDos HighSpeed always:

- Carefully set up and monitor each of the foregoing variables during use of the HanskampQualityTube in the MultiDos HighSpeed.
- Read and heed the instructions of Hanskamp (manufacturer) or (milking machine) dealer of the apparatus, the MultiDos HighSpeed, regarding HanskampQualityTube installation, pump rollers, guide rollers and supply channel maintenance and calibration.
- Inspect the HanskampQualityTube for any damage prior to installation.
- Check that the HanskampQualityTube proper length is contained in the raceway portion of the pump and that the tubing is not twisted or kinked.
- Always constantly monitor the tubing circuit during actual procedures for signs of the HanskampQualityTube beginning to crack, leaks, or air infusion and take appropriate action when observed.

Material safety data sheets are available free of charge by Hanskamp.

Annex 4: Loose parts

For maintenance or for whatever reason it is possible to separate parts be ordered from your dealer. Please use therewith as are indicated. Below the drawing item numbers.

Parts MultiDos HighSpeed		
Art. no.	**Description**	**Num-ber**
001-021-000	Hose pillar ¼" x 9	2
001-453-000	Push-in 3/8" bi x 12mm	2
001-486-000	Reducing ring 3/8" bu—¼" bi	2
001-677-000	Dosing motor 200RPM 24VDC	1
001-947-000	Membrane grommet	1
003-510-000	Socket screw with flange M5x10 a2	3
003-512-005	HanskampQualityTube Q-prene hose	1
003-515-000	Countersunk Hexagon socket screw M6x20	3
003-525-000	MultiDos HS pump complete with lid	1
003-533-001	Spray nozzle complete for MultiDos HS	1
003-555-001	Rotor assembly complete for MD HS	1
003-573-000	Shaft circlip ring for MD HS	1
082-254-100	Airtube PA12W/25m 12x10 natural	0,1
082-254-100	Airtube PA12W/25m 12x10 natural	0,4

Parts 003-555-001 rotor MultiDos HighSpeed		
Art. no.	**Description**	**Num-ber**
003-503-000	Rotor part MultiDos HS red	2
003-504-001	Plastic roller Ø35.0mm	2
003-507-000	Bearing	2
003-508-000	Circlip	2
003-516-000	Countersunk Hexagon socket screw	2
003-549-000	Adapter SW17 t.b.v. MD-HS	1

MultiDos HighSpeed pump		
Art. no.	**Description**	**Num-ber**
003-501-000	Pump housing MultiDos HighSpeed	1
003-502-000	Cover pump MultiDos HS transparent	1
003-507-000	Bearing 6000RS 10x26x8 RVS	1
003-509-001	Knurling bolt M5x29 a2	4
003-519-000	Multisert 003-M5 inserts	4
010-066-000	Sticker with serial no. for pump housing MD HS	1

Color options wall mount	
Art.nr.	**Description**
003-520-000	Wall mount MultiDos HS black with 3 inserts
003-540-000	Wall mount MultiDos HS green with 3 inserts
003-541-000	Wall mount MultiDos HS bleu with 3 inserts
003-542-000	Wall mount MultiDos HS red with 3 inserts
003-543-000	Wall mount MultiDos HS orange with 3 inserts

Hanskamp AgroTech B.V.
Broekstraat 17
7009 ZB Doetinchem
The Netherlands
Tel: +31 (0)314 - 393 797
Fax: +31 (0)314 - 393 826
www.hanskamp.nl/en
info@hanskamp.nl

Visit us on:

