L'port

004-000-000

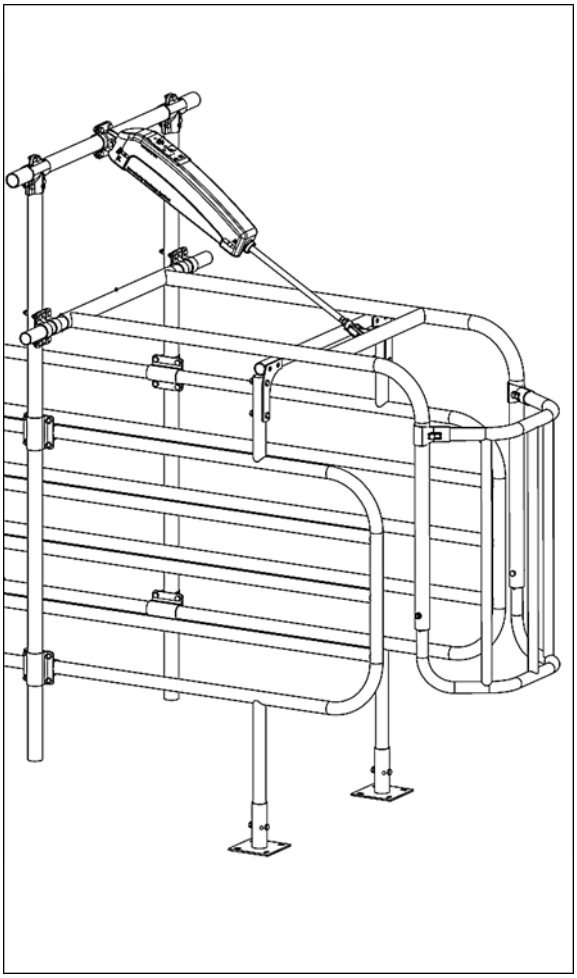

Sluithek
Closing gate
Schließbügel
Porte arrière automatique

Installation and Operating Instructions **EN**

HANSKAMP
Innovation for dairy farming

Article number: 010-079-000

Date: June 2024
Version 2.9 - Translation of original Installation and Operating Instructions
According to Annex 1 Section 1.7.4 of the Machinery Directive 2006/42/EC

Doetinchem,
The Netherlands
www.hanskamp.com

Foreword

Contents of the installation and operating instruction

This manual contains the information necessary for the correct installation and operation of a Hanskamp L'port. Study and understand this information thoroughly before configuration of the L'port. Failure to do so could result in damage to equipment. Please consult your milking equipment dealer if you do not understand the information in this manual, or if you need additional information.

All information in this manual has been compiled with care. Hanskamp shall not be liable for errors or faults in this manual. The recommendations are meant to serve as guidelines. All instructions, pictures and specifications in this manual are based on the latest information that was available at the time of publication. Your L'port may comprise improvements, features or options that are not covered in this manual.

Applicability

The table below shows the type numbers of the L'port for which this manual is applicable.

Model designation

Model	Type number
L'port Universal	004-030-000
L'port XL	004-032-000

Contact number of milking technology dealer

We recommend that you enter the name, phone number and e-mail of your milking technology dealer in the table below, so that you can always find the right information easily.

Name	
Address	
Phone number	
E-mail	

1. Introduction

The L'port closing gate of Hanskamp ensures that every single cow can eat her portion of concentrated feed in peace and you know that the feed goes to the right cow. The L'port closing gate is very simple to install with any type of out of parlour feeding station, including those with shorter side bars. The L'port closing gate is also available in a version with an XL extension.

The information in this manual is aimed at dairy farmers and technicians.

- Dairy farmers use the information to test and adjust the L'port.
- Technicians use the information to install and set up the L'port.

2. Safety

2.1 Introduction

The 'Safety Warning' symbol warns about important safety messages on your L'port and in the manual. Use caution if you see this symbol; it means there is a risk of personal injury or death. Follow the directions of any safety messages.



Safety Warning Symbol

2.2 Warning texts

Note the use of the warnings **CAUTION** and **DANGER** in the safety messages. The following guidelines apply to these warnings:



Caution! Indicates a potentially hazardous situation which could result in minor personal injury or damage to equipment or the environment if the warning is ignored.



Danger! Indicates a potentially hazardous situation which could result in death or serious injury if ignored.

2.3 Safety Instructions

You are personally responsible for operating and maintaining your L'port safely. You must make sure that you and anyone else who operates the equipment, performs maintenance on the L'port or works in the vicinity of the L'port, are familiar with all the safety information in this manual.

Safety is in your hands. Proper safety measures protect you and the people around you. Incorporate these measures into your safety programme. Make sure that everyone who uses, carries out maintenance, or works in the vicinity of the L'port is aware of these safety measures. Do not risk injury or death by ignoring the safety precautions.

- L'port owners must train users before the L'port is used. This training course must be repeated at least once a year.
- The user must read, understand and follow all the safety and operating instructions in the manual.
- Anybody who has not read and understood all the safety and operating instructions must not operate the L'port.
- Do not make any modifications to the equipment. Unauthorised modifications may affect operation, affect the service life of the equipment, and/or result in personal injury.
- Only use original spare parts, and make sure that they are fitted by authorised technicians.

2.3.1 General safety

- Make sure that you have read and understood the manual and the safety instructions before connecting the power supply to operate or adjust the L'port, or turning it off for maintenance.
- Only trained personnel may operate the L'port.
- Install all guards and safety devices before using the L'port.
- Wear proper protective clothing and equipment.
- Before cleaning the L'port or performing maintenance on it, switch off the power supply of the L'port by removing the plug from the socket. Also be sure that the compressed air supply is depressurised.
- Make sure that phone numbers of emergency medical care available in your area are at hand.
- If you have any other questions, please contact your milking technology dealer.
- Review all safety-related topics with all users at least once a year.

2.3.2 Electrical safety

- Only a qualified electrician may install the L'port power supply.
- Check whether the earthing of the electrical system and all parts of the L'port comply with local rules and regulations.
- Replace any damaged electrical cables, cable sheaths, switches and parts immediately.
- Isolate or switch off the power supply before opening the L'port and working on the electrical system.

2.3.3 Safety during installation

- Make sure that you have read and understood the instructions in this manual.
- Check whether the L'port has been installed correctly, as described in the manual.

2.3.4 Safe operation

- Make sure that you have read and understood the manual and the safety instructions before connecting the power supply to operate or adjust the L'port, or turning it off for maintenance.
- Before cleaning the L'port or performing maintenance on it, switch off the power supply of the L'port by removing the plug from the socket. Be sure that the compressed air supply is depressurised, switch the compressor of by using the main switch of the compressor, and close the air valve.
- Install the lid and other safety devices before using the L'port.
- Keep hands, feet, hair and clothing away from live parts.
- Keep all unauthorised persons, especially small children, away from the L'port at all times.
- Before connecting the L'port to the power supply, make sure that all parts are properly tightened and that all cables and mountings are in good condition.
- If you have any other questions, please contact your milking technology dealer.

2.3.5 Maintenance safety

- Make sure that you have read and understood the manual and the safety instructions before connecting the power supply to operate or adjust the L'port, or turning it off for maintenance.
- Only trained personnel may service and maintain the L'port.
- Before cleaning the L'port or performing maintenance on it, switch off the power supply of the L'port by removing the plug from the socket.
- Wear protective clothing and safety glasses when working on the pneumatic system.
- Make sure all guards and guards are installed when you have finished maintenance work.

2.3.6 Safety messages

- This chapter lists the general safety messages. Specific safety messages, where potential hazards may arise if the procedures or instructions are not followed, are included in the appropriate sections of this manual.

2.3.7 Compressed air quality prescription

Lubrication

The cylinders have been designed for use with unlubricated air, in which case no maintenance is required. If lubricated air is used, lubrication must be continuous because the additional lubrication removes the lubricant applied at the factory.

Recommended oils: ISO and UNI FD22 (Energol HPL; Spinesso; Mobil DTE; Tellus Oil).

Air

With reference to ISO/DIN 8573-1, the compressed air to use is class 3-4-3, i.e.:

- Solid particle class 3: 10.000 particles/m³ with d≤5 micron.
- Humidity class 4: Pressure dewpoint ≤ + 3°C.
- Oil class 3: Concentration total oil ≤ 1mg/m³.

Consumption

At 6 bar -> 8.7 Liters per visit.

Remaining

Max. pressure:	10 bar (valves, cylinders).
Min. pressure:	2.5 bar (valves).
Supply pipe:	Ø8 to Ø12 mm.
Pipe between articles:	Ø6 to Ø8 mm.

Warning! Be sure that the flow regulator and end cushioning not completely turned out. These parts are regulating the in- and outgoing speed of the cylinder. When the speed is too high, the cylinder can break. Correct adjustment can be found in relevant installation and user instruction.

Warning! Make sure the cylinder is never mounted under radial forces. The cylinder can handle only axial forces on the piston rod.

3. Installation and Operating Instructions

General description

The L'port closing gate from Hanskamp is a pneumatically supplied gate that is designed to close the out of parlour feeding station for cows. The L'port closing gate must be attached parallel to the feed motors from all the feed sorts in de out of parlour feeder. This assembly instruction will guide you through the installation of the L'port closing gate (fig. 1). Reed this instruction carefully and follow the safety instructions. Assembly examples and further information can be found on our website: www.hanskamp.com.

The order numbers and names of some parts are listed in the appendix.

Transport and storage

The L'port closing gate will be shipped on a pallet. This pallet is completely sealed and the corners are covered with tape to prevent damage. The L'port closing gate is also stored this way.

Please note! Always use an appropriate vehicle (forklift truck, pallet fork, pump truck, etc.) to move the pallet.

Please note! Parts may fall off the pallet when it is being unpacked.

Please note! The L'port installation must be protected against weather influences. Hanskamp advises not to install the installation outside.

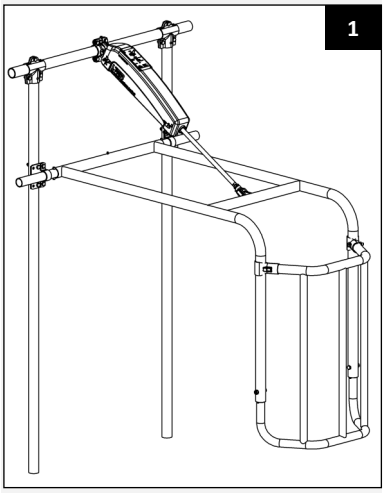

The pallet includes:

1. 1x art. no. 4111 Moving element;
2. 1x art. no. 4112 Extension element (universal) or art. no. 4113 Extension element (XL);
3. 2x art. no. 4109 Standing leg tube;
4. 1x art. no. 4108 Hinge tube;
5. 1x art. no. 4110 Cylinder support tube;
6. 1x box with remainder parts.

Type designation, can be found on the control box

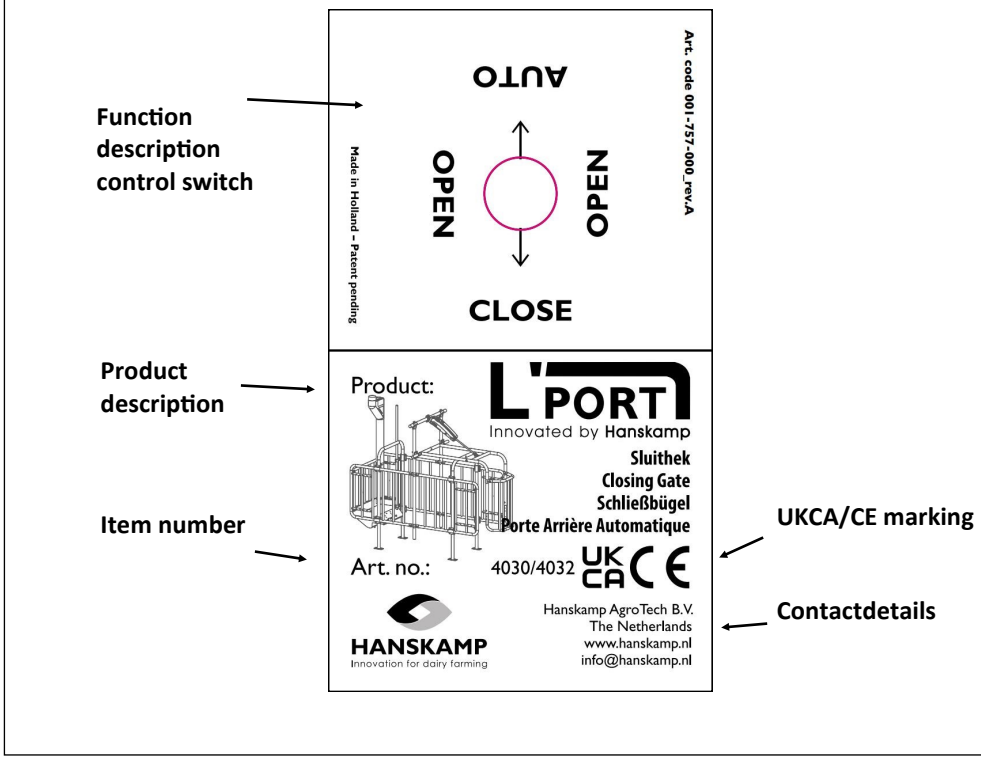

Safety stickers

The user and installer are solely responsible for the safe operation and maintenance of the L'port closing gate. Safety stickers are used to ensure safety in and around the L'port closing gate. These stickers should be placed in a correct manner. Information about which sticker should be attached where can be found further on in these instructions for installation and use (for example fig. 2).

Applying the stickers

- Make sure the surface is dry and clean.
- Make sure the surface temperature is at least 5 °C.
- Find the right position for the sticker.
- Remove a small portion of the foil on the back.
- Place the sticker on the surface and press a small portion of the self-adhesive layer onto the surface.
- Carefully remove the foil and press down the rest of the sticker.
- Remove any air bubbles with a needle and use the foil to smoothen the sticker.

Maintaining stickers

- Keep safety stickers clean and legible.
- Clean safety stickers with soap and water.
- Do not use solvents or abrasives that could damage safety stickers.
- Replace missing or illegible safety stickers.

Safety stickers are available from Hanskamp. Always use the product numbers in correspondence.

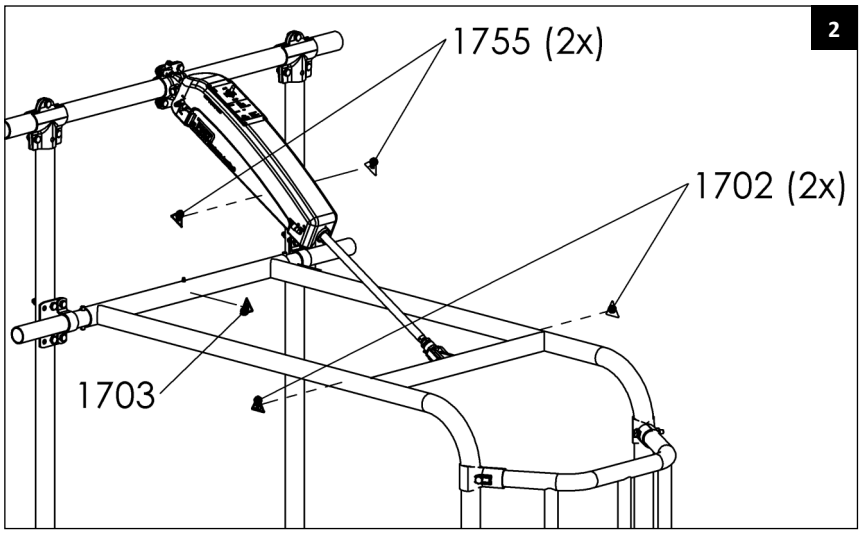



1702 Warning sticker
Put the supplied stickers on the moving element, where it rests on the anti-jump gate. See fig. 2.



1703 Warning sticker
Put the supplied stickers on the moving element, where the hinge tube sits in the extended element. See fig. 2.



1755 Warning sticker
Put the supplied stickers on the cylinder cover at the rod-side. See fig. 2.

Assembly

1. Check that all the parts are present using the item list. The list of materials can be found in the appendix.

Please note! No fastening material is supplied to fit the L'port closing gate to the out of parlour feeder.

2. Measure from the heart of the feeding trough ±1100 mm and from the heart of the anti-jump gate 575 mm high (fig. 3). Place at this measure the standing leg tube (art. no. 4109) at the side fences. Fastening materials are not included.
3. Mount the tube assembly plate (art. no. 4106) and the two clamps (art. no. 1058) to both standing leg tubes (fig. 3A). Mount them loosely for further assembly but keep in mind to fasten them later!
4. Place the 3-hole T-clamps (art. no. 4114) on top of the two standing leg tubes and connect the standing leg tubes with the cylinder assembly tube (art. no. 4110) (fig. 3B).
5. Mount the double 4-hole half scale with cylinder assembly eyes (art. no. 4103 & 4104) in the middle of the cylinder assembly tube (fig. 4).

Important! Make sure that the cylinder assembly tube is fixed well and cannot rotate in the 3-hole T-clamp. Make sure that the double 4-hole half scale cannot rotate on the cylinder assembly tube and is mounted correctly in the middle. The double 4-hole half scale should be in a position horizontal to the cylinder assembly tube. The L'port closing gate will operate incorrectly if these instructions are not followed.

6. Slide the hinge tube (art. no. 4108) in the tube of the moving element (art. no. 4111). Mount the hinge tube with the two tension pins (art. no. 1555) to both sides (fig. 5A).
7. Loosen the screw 1559 in the leg tube (fig. 5B). Add trough the nipple lubricant. This is for the prevention of noise and wearing out of the moving parts.
8. Mount the hinge tube to the standing leg tube. Attach the hinge tube with the mounting clamps (fig. 3A). Make sure that the moving element is in the middle of the two standing leg tubes. Put the moving element on the available anti-jump gate.

Important! Make sure the horizontal tubes of the moving element are levelled when the moving element is mounted and rests on the anti-jump gate. Should this not be the case, adjust the height of the standing leg tubes again.

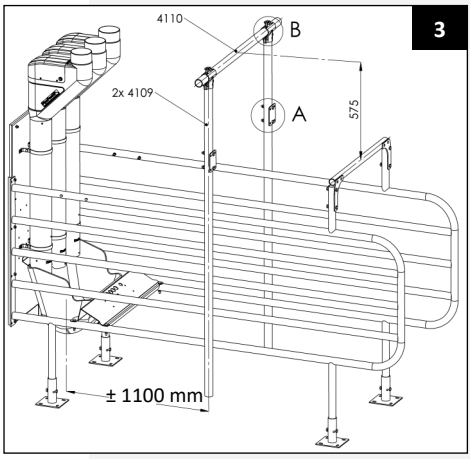

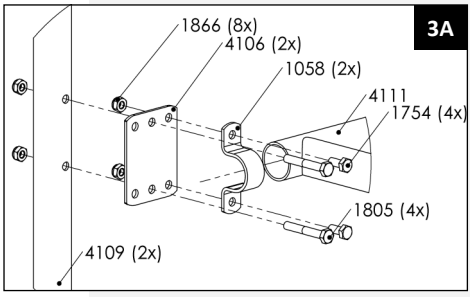

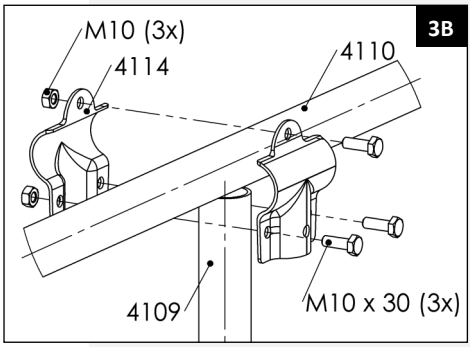

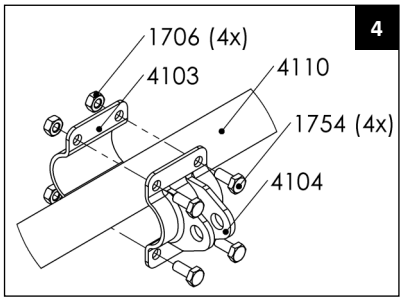

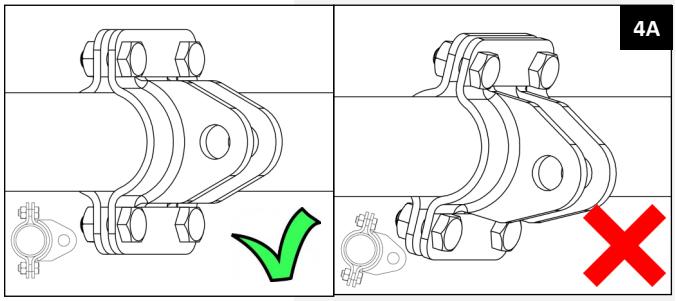

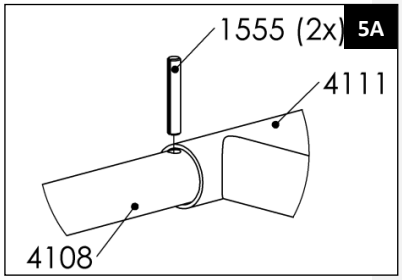

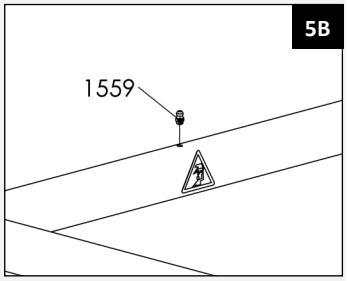

9. Mount the cylinder set (art. no 4040) between the moving element and the cylinder assembly tube. Mount the pin from the 2-cheeked back hinge to the double 4-hole half scale (fig. 6).
10. Mount the fork from the cylinder to the fork attachment point at the moving element.
11. Assemble the extension element (art. no. 4112 or art. no. 4113 for the longer version) to the moving element. Use the supplied bolts, nuts and clamps (art. no. 1611 or 4115) (fig. 7).
12. Mount article number 4127 and article number 4206 on the hinge tube and the support tube (fig. 8A).
13. Cut the L'ports standing leg tube 4109 about 1 cm under the clamp. The height is variable; therefore there are no fixed dimensions.

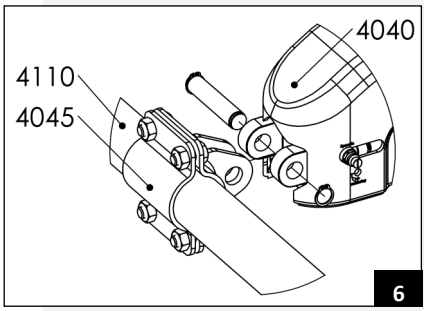

6

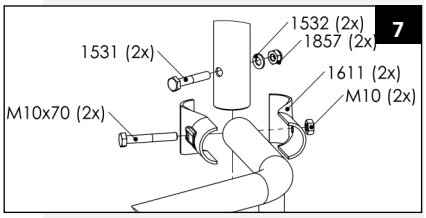

7

Please note! Adjust the extension element carefully! The udders need to be well protected. Pay attention to the walk-through height when the L'port closing gate is opened.

14. Assemble the air supply to the cylinder. Use Ø8 mm air tube. Use the T-coupling (art. no. 1294) to loop the air supply (fig. 10.d) in case of installing multiple L'ports. Recommended air pressure: 6 bar. The length of the supply tube is max. 75 m. See www.hanskamp.com for compressed air requirements.

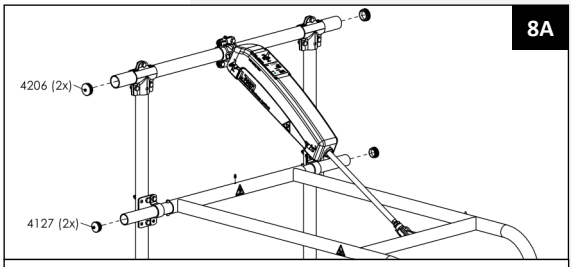

8A

Art. no. 4127 round insert 1¼" (Ø 42.4) dark grey
Art. no. 4206 round insert 1.7/8" x 1.0-3.0 mm

Please note! Mount the air tubes out of cow's reach. Make sure that the air is clean, dry and well-conditioned. Make sure there is no air pressure on the hose when the cylinder is attached to the hose.

15. **Electrical connection**
The supplied cable (art. no. 1593) (fig. 10.a) should be connected in accordance with the diagram (fig. 9). The L'port PCB needs to be supplied with 24VAC or 24VDC. The maximum consumption is 5 Watt. The IN1, IN2 and IN3 ports should be wired parallel over the motors of the feed kinds. The ports work on 12-24VAC/DC. The power supply and inputs are kept separate galvanically on the print. In case of a power breakdown the L'port closing gate opens automatically. If there is no 24 Volts available, then order item number 2812 Hanskamp PowerUnit 10A 24VDC.

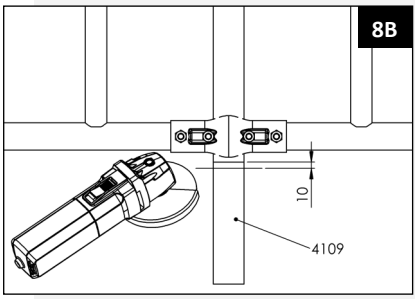

8B

Please note! Cable to be installed out of cow's reach. Make sure to disconnect the power supply before the L'port closing gate is connected. Avoid sudden movements.

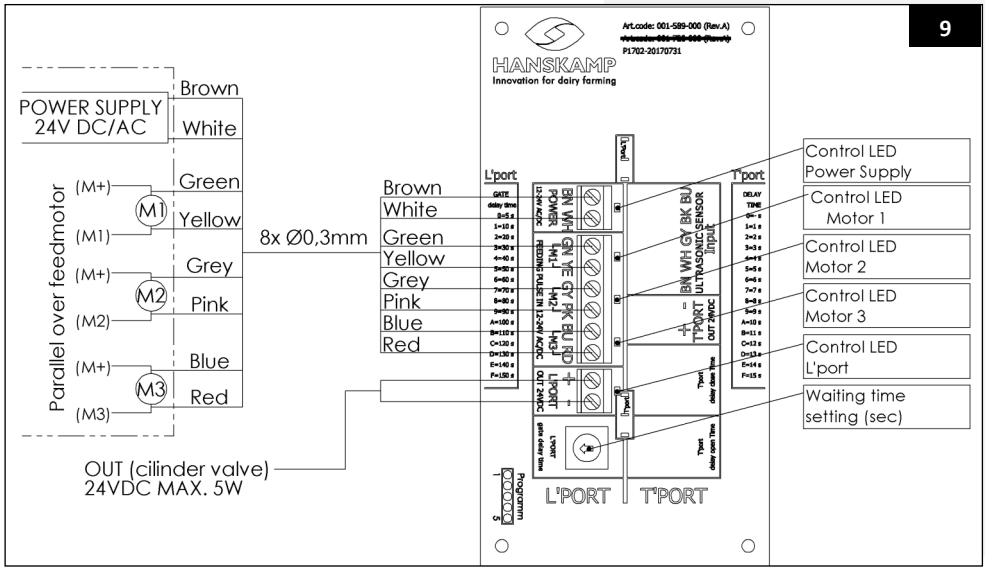

9

Operation

With the 3-Position Switch (fig. 10.f) a choice can be made to open the L'port closing gate (Open), to close the L'port closing gate (Close) or to have the L'port closing gate operate automatically (Auto). In position 'Automatically', the L'port closing gate will close when the feed motor receives an electrical pulse. The L'port closing gate will open after a delay time. The delay time will automatically reset when the feed motor has received a new electrical pulse. This delay time can be set via the 14-positions switch on the L'port Control PCB (time setting in sec.) (fig. 9). The delay time has to be bigger than the total interval time of the used feed kinds. Recommendation: interval time + 25 seconds.

Meaning

With the brands of DeLaval, Fullwood, Insentec, Hokofarm and GM time has to be set at 40 seconds (pos. 4). With Nedap VC control: add the interval time of the used feed kinds + 25 seconds. So, with one feed kind 40 seconds (pos. 4), with two feed kinds 60 seconds (pos. 6) etc. A spray installation to be connected on the 'Spray' output is optional.

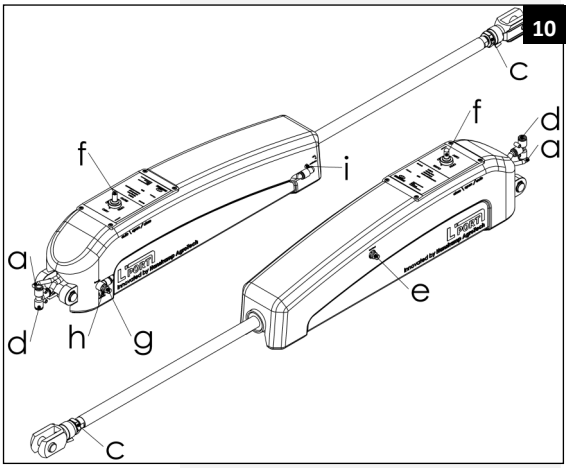

Explanation position-switch delay time

Time setting in sec.

0 = 05 sec.	A = 100 sec.
1 = 10 sec.	B = 110 sec.
2 = 20 sec.	C = 120 sec.
3 = 30 sec.	D = 130 sec.
4 = 40 sec.	E = 140 sec.
5 = 50 sec.	F = 150 sec.
6 = 60 sec.	
7 = 70 sec.	
8 = 80 sec.	
9 = 90 sec.	

Adjustment

1. Adjust the length of the cylinder-rod to the fork (fig. 10.c) so that it puts pressure on the anti-jump gate in the lowest position.
2. With the 'Speed in' adjusting possibility, that is indicated on the lid with 'Speed in' (fig. 10.g), it is possible to set the ingoing speed of the cylinder-rod. Be sure that the L'port moves in ±3 sec, from bottom to top position.
3. With the 'Speed out' adjusting possibility, that is indicated on the lid with 'Speed out' (fig. 10.e), it is possible to set the outgoing speed of the cylinder-rod which has to be ±5 sec.
4. With the 'Cushioning' adjusting possibility, indicated on the lid with 'Cushioning' (fig. 10.h & i), the end cushioning can be set to a fluent end stop of the rod. The adjust tool is 2.5 mm hexagon socket.

Please note! When the above adjustment steps are not observed correctly, this may reduce the durability of the L'port Closing gate drastically.

Danger! Check whether the air lines are properly connected and that they are not pinched before pressure is placed on the lines. In the event of incorrect connection, the output force of the cylinder can be increased, resulting in serious pinching hazard.

Caution

Attention! Danger of getting jammed.
Attention! L'port closing gate starts automatically.
Attention! Risk of impact from the L'port closing gate when walking in.

Start-up

After installation: Leave the L'port closing gate open for one week by putting the switch on 'Open' (fig. 10.f), so that the cows can get used to the new installation. After this week the installation can be put into operation, by placing the switch (fig. 10.f.) to 'Auto'. The sound level always equals 70 dB (A) or less.

Important! Make sure that the person who operates the L'port closing gate, is always standing on a safe place. When the L'port closing gate is in operation, no persons should be near the L'port closing gate. It is not allowed to climb the L'port closing gate when in use.

Maintenance

Check the L'port closing gate on a daily basis on faults and wear out. Do this by means of a test on the output of de feed motors and through the manual switch on the cylinder (fig. 10.f). Make sure that the vibrations and noises caused by the L'port closing gate are reduced as much as possible. For example by mounting grease nipple and lubricate the moving parts.

Please note! In case of maintenance make sure to always first switch off the air pressure and the voltage to the feeding station.

Disassembly

In case of disassembly all parts should be separated on material type and should be processed in the right type of waste management system.

Please note! When dismantling the L'port closing gate, always first switch off the air pressure and voltage to the feeding station.

Overview of changes included in these installation and operating instructions

No.	Release date	Chapter(s)	Comments
1	05/2013		First draft
2.0	05/2014	All	Update to default, FAQ added
2.1	07/2014	Page 12	Warranty limitations compressed air requirements added
2.2	08/2014	All	New name and logo added
2.3	03/2015	All	New address
2.4	10/2015	All	General inspection
2.5	01/2017	Loose components	Figure 14
2.6	03/2018	ALL	Updated figures of new control PCB
2.7	01/223	Page 14	UKCA logo added
2.8	10/2023	Page 7 + 9	Page 7 image with UKCA logo inserted. Change from ±1005 to ±1100 mm, in text and image.
2.9	06/2024	Page 7	Warning added: Attention! The L'port installation must be protected against weather influences. Hanskamp advises not to install the installation outside.

Warranty Limitations

Costs and expenses resulting from the following are excluded from the warranty:

- Using the equipment improperly, in violation of the specifications in the installation and operating instructions;
- The consequences of any intervention by mechanics other than mechanics approved by Hanskamp for carrying out certain work;
- Incidents such as freezing, ice, fire, flood, flooding or any other problems caused by excessive water, and lightning;
- Defective electrical system or earthing;
- Damage to the electrical system caused by pests and the like;
- Using compressed air improperly, in violation of the compressed air instructions drawn up by Hanskamp in collaboration with suppliers, which causes a defect in the pneumatic systems. These compressed air regulations can be consulted at www.hanskamp.com.

The warranty does not apply to consequential damages unrelated to the machine itself. All systems have been tested, However, in the event of defects, Hanskamp AgroTech BV cannot be held responsible for consequential damage.

4. FAQ

Common problem	Possible cause	Solution
Installation completed, gate doesn't open, the valve switches.	Speed controllers are completely closed down.	Turn the flow-micro regulators (10.c & 10.g) open.
L'port makes a squeaking noise at the hinge tube.	No fat / lubrication between hinge tube and moving element.	Install the grease nipple and lubricate the moving parts.
Cylinder goes shocking in or out.	There could be a lateral force on the piston-rod.	Take the fork off irrespective from the moving element. Place the clamp 4045 again, so that the fork freely can be attached to the mounting element.
L'port doesn't close, there is no light burning/ several lights are burning.	- Signal cable is incorrectly connected. - No power on PCB. - Not the correct power has been supplied. - Cable is broken.	- Review or signal cable is properly connected (see page 10). - Check the connection and power supply. - Check that the PCB is connected to 24 AC or DC (at 12 volts the gate will not work) (see page 10). - Connect new cable and remove the old one.
Gate goes right after the feed portion open again.	Waiting time is incorrect set.	Set Waiting time properly (see page 11).

Copyright and disclaimer
The information in this publication is for informational purposes only, and is not intended as a sales quote. The products offered may differ from the images. Any brand or product references in this manual are for identification purposes only. The company and product names mentioned in this manual are trademarks. No part of this publication may be reproduced or made public without the prior written consent of Hanskamp AgroTech BV. Although this publication has been compiled with the greatest care, Hanskamp AgroTech BV is not liable for any damage that may arise due to any errors or omissions it might contain. The Dutch installation and operating instructions are the original installation and operating instructions. Translations into other languages are based on the Dutch installation and operating instructions as a source document. Hanskamp AgroTech BV accepts no liability for differences between the translations. If there are any doubts about the content and accuracy of the translated installation and operating instructions, the Dutch installation and operating instructions shall prevail.

Declaration of incorporation of complete machines IIA

According to Annex IIA of the Machinery Directive 2006/42/EC, for completed machines

We,
Hanskamp AgroTech BV
Broekstraat 17
7009 ZB Doetinchem
The Netherlands,

Authorised compilers of the technical file:

H.J. Hanskamp,

declare under our sole responsibility that the following product:

L'port (24VAC & 24VDC), type numbers 004-030-000 & 004-032-000,
Universal closing gate to close off feed stations,

to which this declaration relates, complies with the provisions of the following directives:

- Machinery Directive 2006/42/EC

The product also complies with the provisions of the following standards:

- NEN-EN-ISO 12100
- NEN-EN-ISO 4414
- NEN-EN-IEC 60204-1
- NEN-EN-IEC 13849-1

If the L'port is not connected and the prescribed safety instructions are not used, this Declaration of Conformity is not applicable and no rights can be derived from this declaration.

Doetinchem, the Netherlands, 17-10-2023 H.J. Hanskamp



Appendix

Hanskamp can supply the following types of L'port closing gates:

4030 L'port closing gate universal, fits on all types of out of parlour feeders.
4032 L'port closing gate XL (extended back gate), fits on DeLaval FSC40(0), FP200 & Lely Cosmix S out of parlour feeders.

Dimensions:

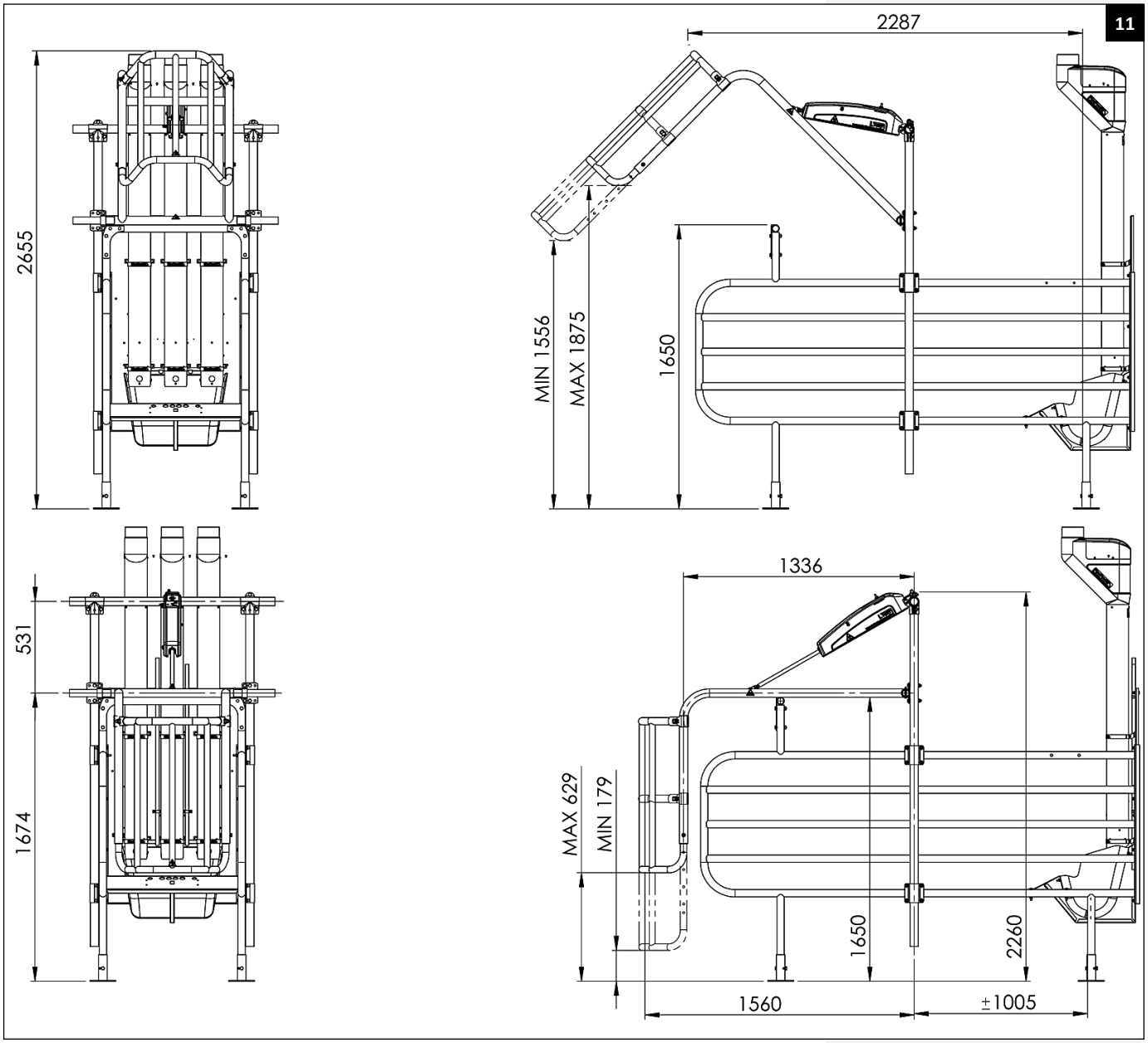

Please note! Dimensions are related to the level of the anti-jump gate. (Example level in the drawing is 1650 mm.) For a correct calculation of the dimensions, the height of the anti-jump gate must be taken into account in the situation to be installed.

Loose components

It is possible to reorder loose components from your supplier for maintenance, or for any other reason. Please use the item numbers as shown on the drawings (exploded views).

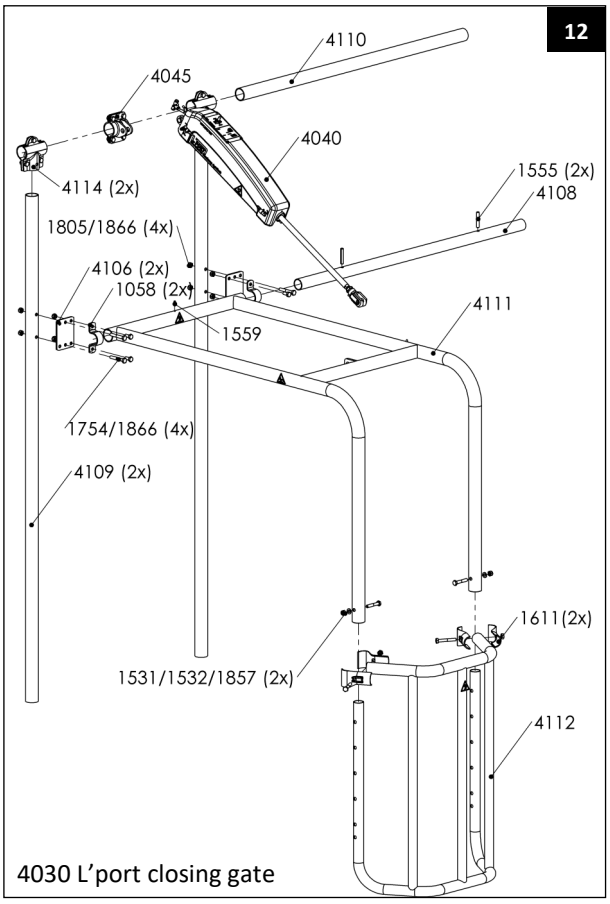

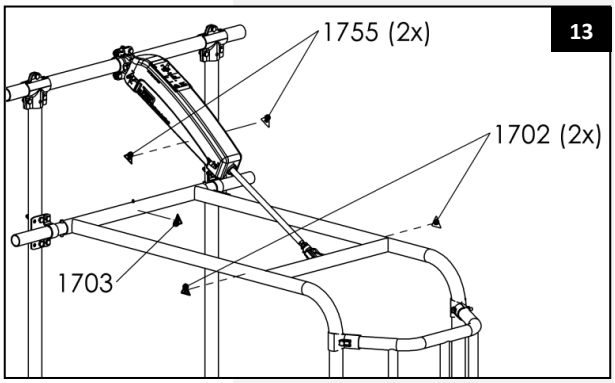

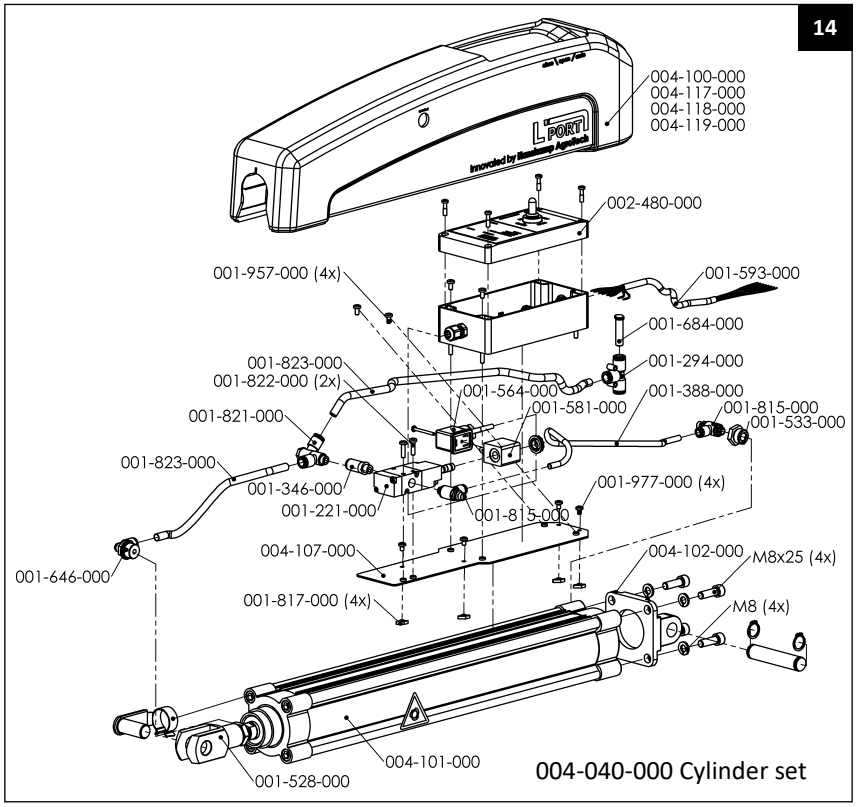

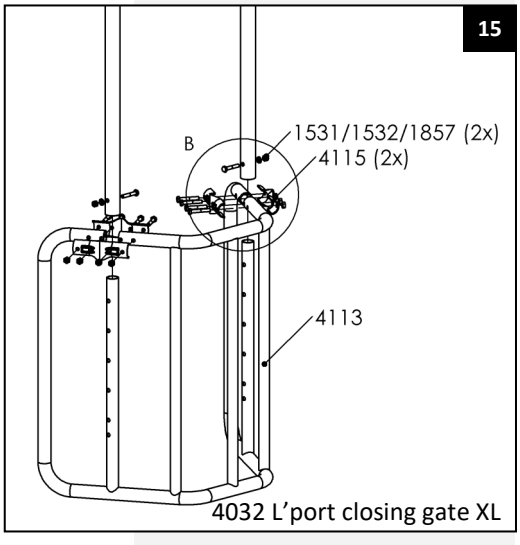

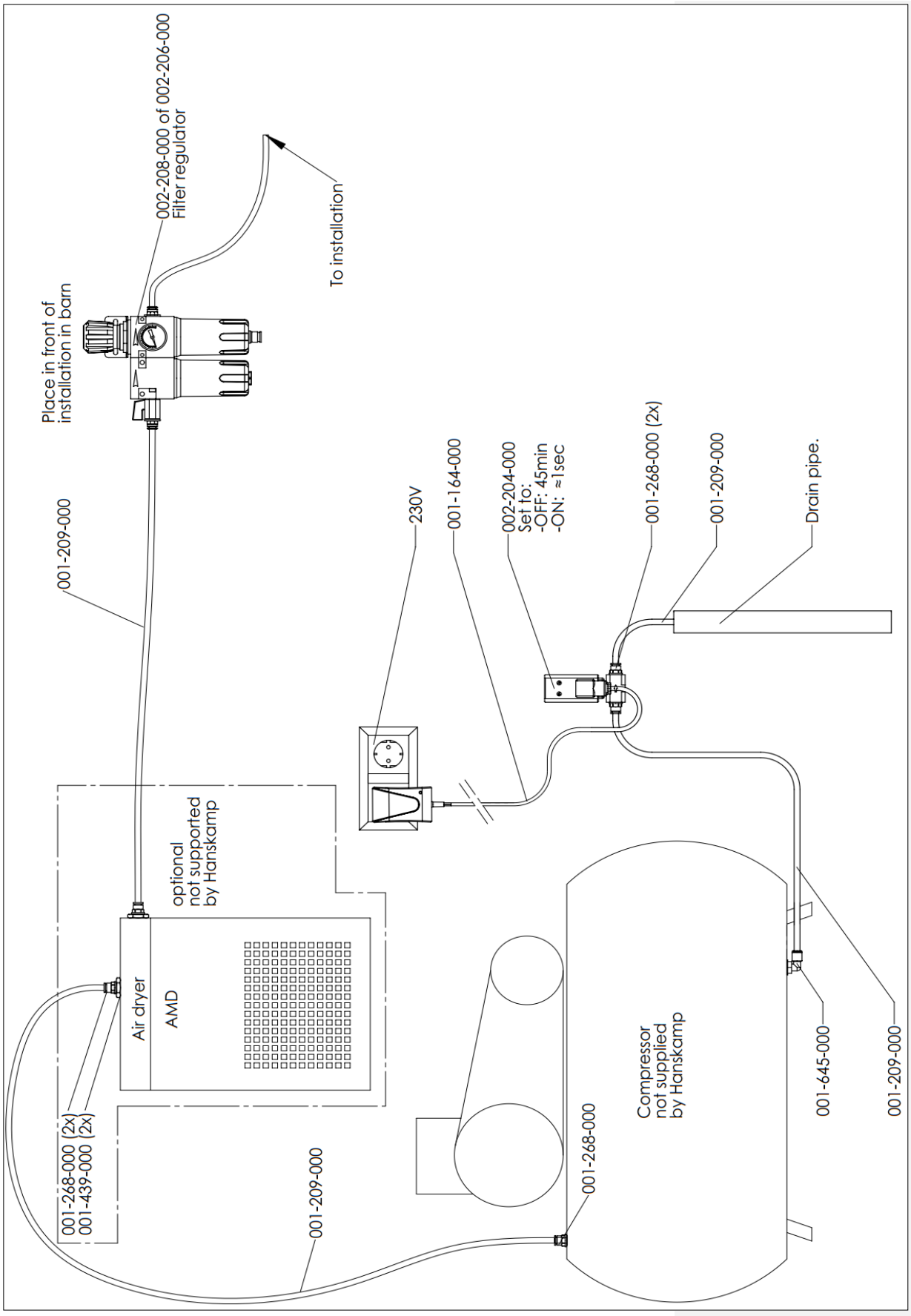
002-208-000 of 002-206-000
Filter regulator
To installation
Place in front of
installation in barn
001-209-000
230V
001-164-000
002-204-000
Set to:
-OFF: 45min
-ON: ≈1sec
001-268-000 (2x)
001-209-000
Drain pipe.
optional
not supported
by Hanskamp
Air dryer
AMD
001-268-000 (2x)
001-439-000 (2x)
001-209-000
001-268-000
Compressor
not supplied
by Hanskamp
001-645-000
001-209-000

Descriptions of the components in figures 10, 11 & 12:

004-030-000 L'port closing gate universal,
004-032-000 L'port closing gate XL

Art. no.	Description	Quantity
004-036-000	Parts box L'port closing gate universal*	1
004-038-000	Parts box L'port closing gate XL**	1
004-108-000	Hinge tube 1¼, l = 1190 mm	1
004-109-000	Standing leg tube 1½", l = 1976 mm	2
004-110-000	Cylinder support tube 1½", l = 1190 mm	1
004-111-000	Moving element	1
004-112-000	Extended element universal	1
004-113-000	Extended element XL extra extended	1

004-036-000 & 004-038-000 Parts box L'port closing gate

Art. no.	Description	Quantity
001-593-000	Cable LiYY 8x0,34mm l=8mtr.	1
001-755-000	Warning sticker start auto	2
001-822-000	Screw M4x25	2
001-957-000	Screw M4x8	4
002-480-000	Control box complete with 3 position switch L'port	4
004-041-000	Cylinder set L'port closing gate	1
004-056-000	Parts bag L'port closing gate universal *	1
004-058-000	Parts bag L'port closing gate XL **	1
004-107-000	Assembly plate cylinder	1
004-123-000	Box 40	1

* Article only available in L'port Universal 4030.
** Article only available in L'port XL (longer extended element 4032).

004-056-000 Parts bag L'port closing gate universal,
004-032-000 Parts bag L'port closing gate XL

Art. no.	Description	Quantity
000-993-000	LDPE plastic bag 30x42cm	1
001-058-000	Tube clamp 1¼" hot-dip galvanised	2
001-531-000	Bolt M10x60	2
001-532-000	Washer M10	2
001-555-000	Spring pin 10x60 heavy type	2
001-559-000	Grease nipple M6x1	1
001-611-000	T-clamp 2-piece 1½" x 1¼" *	2
001-702-000	Warning sticker pinch risk	2
001-703-000	Warning sticker risk of impact	1
001-754-000	Bolt M10x20	4
001-805-000	Bolt M10x70	4
001-857-000	Nut M10	2
001-866-000	Nut self-locking M10	8
004-045-000	4-hole half scale complete	1
004-106-000	Tube assembly plate	2
004-114-000	3-hole T-clamp 1½" x 1½"	2
004-115-000	Double T-clamp 1½" x ¼" **	2
004-127-000	Round insert 1¼" dark grey	2
004-206-000	Round insert 1.7/8" x 1.0-3.0 mm dark grey	2

Art. no.	Description	Quantity
004-100-000	Cover L'port LLDPE/MDPE black	1
004-117-000	Cover L'port LLDPE/MDPE green	1
004-118-000	Cover L'port LLDPE/MDPE blue	1
004-119-000	Cover L'port LLDPE/MDPE red	1
004-131-000	Cover L'port LLDPE/MDPE orange	1

Hanskamp AgroTech BV
Broekstraat 17
7009 ZB Doetinchem
The Netherlands
Tel: +31 (0)314 - 393 797
Fax: +31 (0)314 - 393 826
www.hanskamp.com

Also take a look at: