HANSKAMP

Innovation for dairy farming

CATALOGUE



Innovation for dairy farming

2026

Innovation for dairy farming

Henk Hanskamp

Preface

You are looking at the new Hanskamp catalogue in a renewed design and style. It is a style that, in my opinion, fits us perfectly, as it reflects the style of our organisation. At Hanskamp, we value transparency and together we follow one clear vision: Innovation for dairy farming!

To be able to pursue this vision, I make it my priority to give every single person in our company the space, the freedom, and the security to work as effectively and as comfortably as possible.

Based on a strong foundation of mutual trust, our employees draw their inspiration that leads them to design and develop a future-proof dairy sector. Transparency is the key you will find everywhere at Hanskamp. It starts with our spacious, glass-walled company building and results in the accessible character of our product solutions. In accordance with that, we strongly value an open business culture online as well as offline.

This catalogue offers you the full spectrum of our Hanskamp products. Are you looking for customized prices? Directly request a quote from our sales support team.

On behalf of Team Hanskamp

Kind regards,

Henk Hanskamp

Webshop



Contents

01
Future proof farming

04 COWTOILET
06 FREELIVINGBARN
08 FEEDSTATION MOBILE

02
Solutions for milking robots / feed station

10 SPIDER
12 BLACK-V
13 FEEDSTATION WALK-IN
14 FEEDSTATION WALK-THROUGH

02
Solutions for milking robots / feed station

16 FEEDSTATION WALK-THROUGH EXTENDED
17 L'PORT ELECTRIC
18 L'PORT
20 MULTIDOS
21 MULTIFILL

03
Precise feeding in the milking parlour

22 PIPEFEEDER
24 MULTIFRAME

04
Cost effective feeding in the carousel

25 PIPEFEEDER HIGHSPEED
25 MULTIDOS HIGHSPEED

05
Motors and general parts

26 MOTOREN
27 HANSKAMP ONLINE

04

COWTOILET



A Hanskamp innovation
The cow-friendly solution to retaining valuable nitrogen on the farm.

- More than 40% reduction in ammonia emissions
- Precise and targeted use of resources
- Universal for every shed

Urine values

Nitrogen	6 kg/m3
Phosphate	0 kg/m3
Potash	12 kg/m3

For more information visit our YouTube channel!

The cow-friendly solution

The best for your cows and the most from your land! Every farmer knows that a cow that feels healthy and at ease will perform better. But the land needs to be in good condition as well to yield maximum return. The CowToilet ties these two visions together. The CowToilet ensures that urine is collected separately from the manure. By taking the urine out of the cowshed we create a healthier climate in and around the sheds. Besides that, the CowToilet keeps floors dry and clean which results in greater hygiene and healthier hooves.

Collecting the urine separately from the manure prevents the formation of ammonia and thus ammonia emissions on the farm.

This method also makes nitrogen available as a replacement for chemical fertilizers which can result in substantial yearly savings. Collecting urine separately with the CowToilet leads thus to a more efficient use of raw materials and less ammonia emissions on the farm.

HANSKAMP
Innovation for dairy farming

tel +31 (0)314 - 393 797
e-mail info@hanskamp.com
internet www.hanskamp.com

SPAREPARTS



Set of overhaul parts for 1-year
For annual maintenance CowToilet
005-585-000



Set of overhaul parts for 3-year
For three-year maintenance
005-586-000



Cylinder overhaul kit Ø80
005-543-600



Urine sensor pressure transmitter 5 VDC
005-570-004



Urine pump hose overhaul kit incl. grease
005-570-200



Overhaul set CowToilet Gauze in urinal
005-508-600



Cylinder lubricant, for slowspeed (50 g)
001-005-001

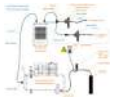

Set of products for air supply CowToilet
011-189-000



Revision set cylinder for Lport and Closing gate Ø63
001-422-000

The cow-friendly solution to retaining valuable nitrogen on the farm!

- Reduced odour nuisance
- Improvement for the respiratory

- Can be placed in any stable, also with grazing
- One FeedStation Walk-Through with CowToilet per 25 cows

- Conservation of nutrients on the farm
- No nitrogen deposition in nearby areas

- Dry floors = better hoof health
- Cleaner air = healthier respiratory system
- 12 litres of urine per cow, per day



Eurotier 2021 innovation award!

But how does it work?

Cows are not potty trained, but they are very well creatures of habit. The CowToilet makes use of a natural nerve reflex that causes cows to urinate. To do so, the CowToilet needs to be installed onto a feed station. After the cow has finished feeding, she will be animated to urinate into the toilet.

This is achieved by automatically placing the CowToilet against the cow's suspensory ligament in the udder and triggering the nerve reflex that makes her urinate. The urine is then collected in the CowToilet container and extracted into a separate storage tank through suction.

06

FREELIVINGBARN



FreeLiving-Barn

A new innovation from Hanskamp. A barn with plenty of freedom of movement for the cow and a bedding made of sand or organic material.

For more information visit our YouTube channel!

The barn of the future

A FreeLivingBarn is a barn without concrete, steel and grids but with a fine bedding. The 20 square metre per cow ensures an optimal living environment for the cow. The FreeLivingBarn in combination with the right bedding results in high-quality organic fertiliser that is highly suitable for fertilising the soil. The FreeLivingBarn in combination with the right bedding results in high-quality organic fertilisers that are very suitable for fertilising the land. Organic matter is important for the soil of the land, a good organic matter supply is essential for good crop yields. A better living environment for the cow, the farmer and nature.

Several test farms have shown that a high somatic cell count is a thing of the past in this new barn

HANSKAMP
Innovation for dairy farming

tel +31 (0)314 - 393 797
e-mail info@hanskamp.com
internet www.hanskamp.com

The Barn of the Future

Eurotier 2022 innovation award!

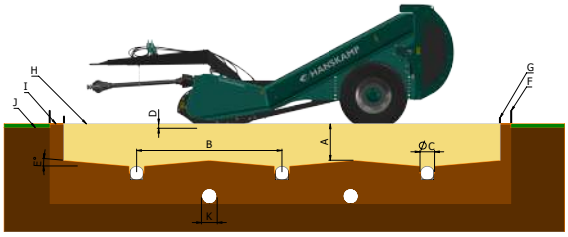

Letter	Meaning	Guideline
A	Depth of sand bed	50 cm
B	Distance between drains	Minimum 200 to maximum 250 cm
C	Diameter of the drain pipes	ø60 – 90 mm
D	Depth of cleaning BeddingCleaner	< 5 cm
E	Slope percentage towards drain pipes	2%
F	Security foil	KIWA 1 mm (must be certified)
G	Foil to guide urine to drainage	Solid film, for example agricultural plastic. Thickness 0.2mm
H	Drainage sand	250 µm to 500 µm
I	Raised sand to put drainage on slope	No requirements
J	Ground level	
K	Drainage pipe control	ø60 – 90 mm which comes out in a well for control
N/A	Central drainagepipe	ø110 mm
N/A	Slope percentage central drainage pipe	0 – 0,5% As long as it is not ascending!!!

- Reduced odour nuisance
- Improvement for the respiratory
- Low maintenance
- Conservation of nutrients on the farm
- No nitrogen deposition in nearby areas
- High cow comfort
- Low somatic cell count
- 20 square metres per cow



How does the BeddingCleaner work?

This machine is essential within the FreeLivingBarn concept and removes the daily fresh cow dung from the bedding. The BeddingCleaner is a kind of mobile sieve and is pulled by a tractor towed over the bedding of the FreeLivingBarn, the most ideal is when the bedding is cleaned once or twice a day. The machine sifts the top layer of the bedding and picks up the cow manure from the bedding and deposits it in the machine's container. The clean bedding falls through the sifting belt and is returned to the bedding in the barn.

08

FEEDSTATION
MOBILE



FeedStation Mobile

The FeedStation Mobile enables individual and automated concentrate feeding to cows during grazing.

Durable design

The FeedStation Mobile can easily be placed in to the pasture with a tractor or 4x4 vehicle. All parts of the feeding station are resistant to various weather conditions and easy to operate by the farmer. It also features a built-in 2230-litre silo, which can be easily refilled using a tractor with forklift or shovel.

- Power supplied by solar panels
- 4G internet
- Up to 2 feed types per place
- Spider management feed distribution software
- 2 or 4 feeding places



Automatic and individual concentrate feeding to dairy and beef cattle during grazing

3 stars on the Innov'Space 2024!

With FeedStation Mobile you can

- ✓ **Improve** the welfare of cows by providing a concentrate ration while grazing
- ✓ **Control** feed costs
- ✓ **Optimise** milk and beef production
- ✓ **Automate** feed distribution as far as possible
- ✓ **Manage and control** feed distribution remotely via phone, tablet or computer



How it works

The FeedStation Mobile is equipped with 2 or 4 feeding stations as standard and can dispense up to 2 types of feed per feeding station simultaneously. The feeding station operates independently thanks to integrated solar panels. Automatic feeding is controlled by Spider, the feed computer system. Accessed via smartphone, tablet or computer, the farmer can easily monitor what each cow has eaten. Identification of each animal is done using ear or neck transponders. The FeedStation Mobile also works in the barn by simply plugging the system into a power outlet. This allows the feeding station to be used all year round, both indoors and outdoors.

10

SPIDER
THE UNIQUE FEEDING
COMPUTER



Spider

The unique feeding computer

Spider is the feeding system that automatically dispenses concentrate feed to individual animals in the milking parlour or feed station. Spider is interesting for farmers that want to feed in an automated and cost-effective manner, regardless of the size of the farm.
The Spider can be used in both feed station and the milking parlour

Now also available with scale, the growth monitoring of your herd!

Weighing cows with a scale offers a number of advantages:
Monitoring growth and production: Regular weighing of cows can help track growth and production. Identify health problems, weight loss or weight gain. This can promote early treatment and recovery.
Increasing efficiency: Weighing cows makes it easier to make certain choices.
Weighing and monitoring livestock can help make more data-driven choices on your farm.



SCALEUNIT



005-190-000
ScaleUnit
Scale for Spider

- Simple and user-friendly to operate
- Reads out all commonly used tags
- Accessible by smartphone, tablet, or pc
- Can be linked to your management programme

ELDA dsp agro soft uniform agri HerdMetrix AgroVision RUMA

IOS & Android app



GET IT ON Google Play

Download on the App Store

Now also accessible from anywhere in the world, via a secure connection, via **GoToSpider.com** (provided your Spider is connected to the Internet)

OPTIONS



005-100-000
SpiderServer
incl. feed processor, Tag reader, 4 port switch, WiFi, 16 antenna inputs, 16 feed doser, 12 valve and 4 sensor connections.



005-115-000
SpiderClient
Tag reader, 16 antenna inputs, 16 feed doser, 12 valve and 4 sensor connections.

Reads out conventional transponders



OPTIONS



Point-to-point Lan connection
005-140-000



5-port switch
005-118-000



8-port switch
005-118-100



4G router for Spider
005-123-000



Dongle hotspot Spider
005-125-000



SpiderAntenna 134,2 kHz
Reads out all transponders except the old Nedap
005-150-200 Green
005-150-300 Blue
005-150-400 Red



005-145-100
SpiderAntenna 120 kHz
Reads out old Nedap transponders



005-165-000
FloorAntenna with EWA
For pedometer, 800 x 400 mm, stainless steel 20 x 5 mm



005-120-000
Stainless steel cover for EWA
enclosure in milking parlor with fasteners for FloorAntenna



005-109-000
Communication cable Spider SF/UTP CAT5E role of 100 m
connection between Server and Client Communication



001-972-000
SolidState 5 cable 100m
Extend motor cable



005-108-000
Powercable 2 x 2.5 mm 100 m
Connection between Spider and PowerUnit



002-812-000 **PowerUnit 10A up to 16 motors**
002-813-000 **PowerUnit 20A 16 to 31 motors**



011-150-000
Limit switch with spring and swivel and 15 m cable
Please indicate the number of animals with your order



005-061-000
Set with SpiderTag protection sleeve, neck straps and neck strap numbers
When placing your order, please specify the number of animals.



005-180-000
Updated! **SpiderTag 134,2 kHz FDX-B (conform iso)**
Protection sleeve for SpiderTag also required



005-185-000
SpiderTag protection sleeve
To protect the transponder, to order per 10.



005-055-000
Collar with buckle
L = 1,3 w = 40 mm



005-060-000
Collar numbers no. 0 to 9
Per number, packed per 10 pieces



004-318-000
Weights for collar 460 gram



005-130-000
FieldTester
Test the antenna field 120-134.2 kHz



005-137-000
Spare part set
SpiderPCB and Carrier board

12

BLACK-V

Black-V

Compact non-spilling powder dispenser

	5 g per portion (powder)	10 g per portion (kibble+farmmix)	30 g per portie (kibble+farmmix)
Spider · GEA feeding station · Nedap	002-674-111	002-674-011	002-674-021
GEA monobox (including bracket and outlet)	002-673-141	002-673-041	002-673-040
Dairymaster	002-673-121	002-673-021	002-673-020
Lely Cosmix	002-677-121	002-677-021	002-677-020
BouMatic · Fullwood · G.M. · SAC · DeLaval VMS	002-672-121	002-672-021	002-672-020
DeLaval feedingstation	002-672-111	002-672-011	002-672-010
Lely A4 · Lely A5 (including bracket, container and outlet)	002-677-131	002-677-031	002-677-030

- Suitable for powder and pellets dispensing
- 5 or 15 gram per portion
- non-spilling and precise
- Ideal for DeLaval products







COMPONENTS



001-845-000
Mounting bracket 3 mm
hot-dip galvanized 3 mm for Black-V



011-246-000
Mounting bracket for GEA monobox / R9500



001-357-000
Mounting bracket for Lely A4 and A5



011-205-000
Vibrating motor
to prevent bridging in stock



002-055-001
Storage container 28 L
Milk white, Black V mounting bracket, capacity: 28 liters - 17 kg



001-849-000
Outfall Black-V
002-021-000
Now with clamping bracket





001-883-001
Auger steel
To replace 15 & 50 gram plastic mortar



011-265-000
Drop pipe Black V stainless steel Ø129x2 l = 990 mm



FeedStation Walk-In

Universal and modular feed station



MONO

042-010-000



DUO

042-020-000



TRIO

042-030-000





For customized price, please contact our sales support.

Expand your concentrate feeding station with an extra PipeFeeder (page 22), Black-V for mineral feed (page 12), L'port closing gate (page 17) or the MultiDos liquid doser (page 20).
Mono represents one feeding station, duo represents two linked feeding stations and trio represents three linked feeding stations. It is possible to link more than three feeding stations. Ask our sales department for the conditions.
Linking to Spider feeding computer, assembled feeding stations with max. 16 dosing units. For additional feeding stations or outside the range of 10 metres, a SpiderClient is required. Excl. Antennas.

OPTIONS



004-246-000
Support for antenna eartag



004-218-000
EWA antenna mounting plate
For mounting antenna adjusting box Nedap



004-203-000
Feed manger stainless steel



004-217-001
Shielding plate 5 mm
Suitable for side fence, incl. M8 mounting hardware



Box mounting plate Ø42,4 mm
Fits cable protection tube, suitable for control boxes

004-247-001	Black
004-247-002	Green
004-247-003	Blue
004-247-004	Red
004-247-005	Orange

14

FEEDSTATION
WALK-THROUGH

FeedStation Walk-Through

The cow-friendly feed station





MONO

043-060-000



DUO

043-070-000



TRIO

043-080-000

- Expand your feed station with an extra PipeFeeder (page 22), Black-V for minerals (page 12) or the MultiDos liquid dispenser (page 20) .
- Mono means one FeedStation. Duo stands for two FeedStations (one partition) and trio for three FeedStations (two partitions). If you would like to connect more than three FeedStations, please contact our sales support team.

**Link to Spider feeding computer, 1-4 grouped feed stations. The SpiderClient can be used for more feed stations or beyond the 10-metre range. Excl. antennas.*

- Faster and friendlier cow switches
- Optimal cow traffic
- Ideal for grazing



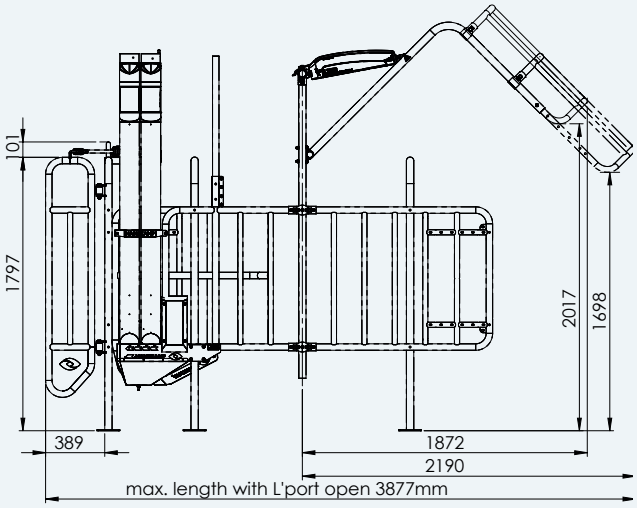



OPTIONS



004-247-001
Box mounting plate Ø42,4 mm
Fits cable protection tube, suitable for control boxes Hanskamp Spider/ PowerUnit, DeLaval ALPRO / DelPro and Nedap Velos. In blue, green, orange, red or black.



004-245-000
Construction kit Lely
Suitable for FeedStation walk-in and walk-through



005-513-000
two narrowing brackets and clamps
for FeedStation



004-250-200
Set of support tubes

002-053-000
Drop tube stainless steel Ø129 mm
l=990 mm for two types of food for each other, for FS-WT incl. safety plate and pressure plate 90°



004-260-000
Bracket for 3 or 4 PipeFeeders



011-265-000
Drop pipe Black-V stainless steel



002-105-000
Set with mounting material for mounting Black-V on FeedStation



002-055-001
Container Black V with mounting bracket

COMPONENTS



002-481-000
Control unit walk-through



001-277-000
Valve 3/2 for T'port
1/8'' without coil



004-348-000
T'Port revision set



Photo electric sensor 24V AC/DC
004-338-000 For FS-wt delivered before 2018
004-338-100For FS-wt delivered after 2018



004-217-001
Shielding plate 2 mm
Suitable for side fence, incl. M8 mounting hardware



007-535-000
Neck recognition
Spider + Nedap Solid Antenna



011-266-000
New! Ear recognition for Delaval

Now also available with 3 or 4 types of feed!

Expand your feeding station with an extra PipeFeeder, Black-V for mineral feed or the MultiDos liquid dispender.

12 BLACK-V

20 MULTIDOS

22 PIPEFEEDER

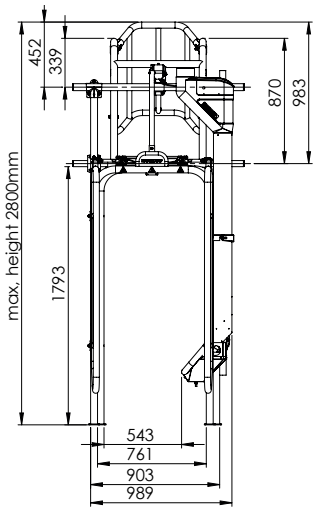

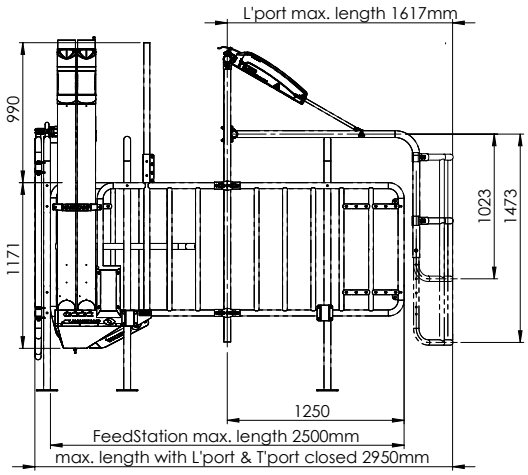

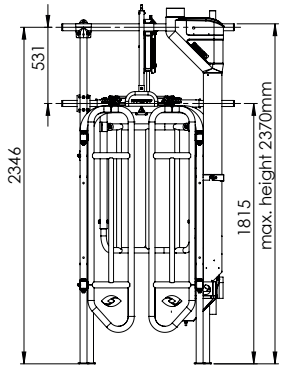

16

FEEDSTATION
WALK-THROUGH
EXTENDED



FeedStation Walk-Through extended

The cow-friendly extended walk-through feeding



MONO

044-060-000



DUO

044-070-000



TRIO

044-080-000

The FeedStation Walk-Through extended is equipped with a PipeFeeder as standard. This feeding station can be connected to any brand of controller and comes without cow recognition and control.

The extended feeding station can easily be extended to a maximum of 4 PipeFeeder, MultiDos for dosing liquid or a Black-V for dosing powders. In addition, several FeedStations can easily be linked together.

- ✓ Less claw strain through forward movement
- ✓ No udder damage due to the closing gate
- ✓ Optimised cow traffic in the barn
- ✓ Cow changes are 10 seconds faster compared to walk-in feeding station
- ✓ Takes up more lengthy space but saves on pneumatic gates and therefore on energy and investment costs
- ✓ Ideal concentrate feeder in combination with batch milking, see the FeedStation Walk-Through

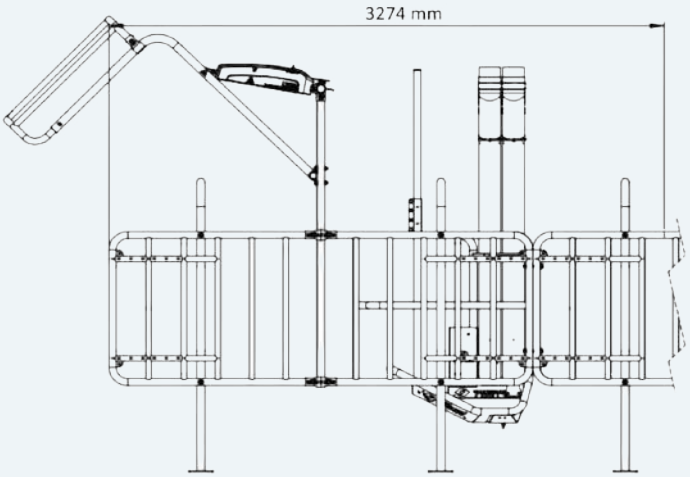



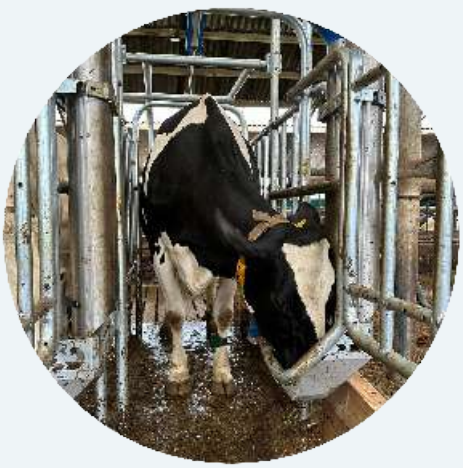

NEW

L'Port Electric

Eating concentrate in peace





An electric version of the L'Port closing gate will be available from mid-2025, in addition to the existing pneumatic version. This new option offers livestock farmers additional flexibility depending on their preferences and operating conditions. The plug and play design makes installation easy and thanks to its connection to standard 230V AC, the electric version fits most parlour feeding stations. Like the pneumatic version, the L'Port Electric only closes when the cow has permission to feed, providing extra protection and preventing bruising to the udder.

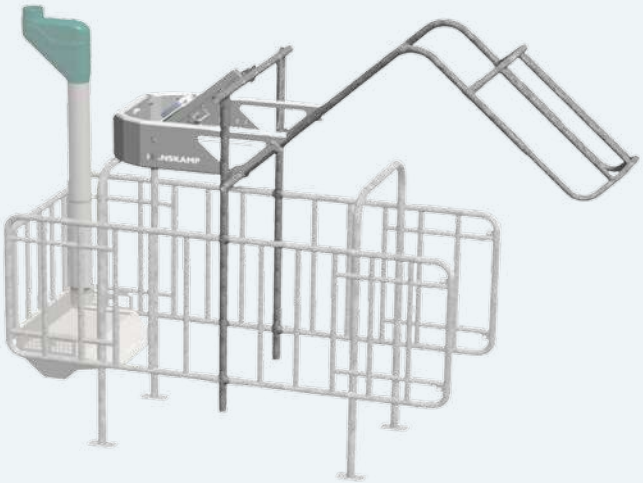



- ✓ Only closes when the cow has permission to eat
- ✓ Every cow receives the right amount of concentrate feed
- ✓ Protects the cows that are eating
- ✓ No more bruising of the udder
- ✓ Fits most parlour feeding stations
- ✓ No compressed air needed
- ✓ Saves +/- 50 kWh per month
- ✓ Operates on 230V AC
- ✓ Plug and play



18

L'PORT CLOSING GATE



- Better feed intake
- Fits every brand and type of feed station
- Udders are fully protected from bumping cows

L'port closing gate

Eating concentrates in peace

L'port closing gate, input 9-30V, Power 24V AC/DC

Spider	004-051-100	BouMatic 24V	004-030-300
DeLaval	004-032-300	Dairymaster*	004-030-300
GEA	004-030-200	Fullwood	004-030-300
Lely	004-032-400	SAC	004-030-300
G.M. • Nedap	004-030-100		

**For Dairymaster an extra relay and power supply is needed: PowerUnit 10A · 002-812-000 ·*

**For BouMatic 110v an extra relay and power supply needed · 002-831-000 ·*

- *L'port includes control system and cylinder. Excl. mounting brackets for side partition.*
- *We advise air conditioning to extend the life of your L'port and T'port cylinder*
- *NOTE: 4 x cross clamp required, for specifications see page 19.*

Is our L'port closing gate too tall for your shed?



T'port back, input 9-30V, 24V AC/DC	004-330-001
T'port back, for Spider	004-330-101
Parallel clamp for connection with side rails	004-349-000

Height T'port: 1.940mm

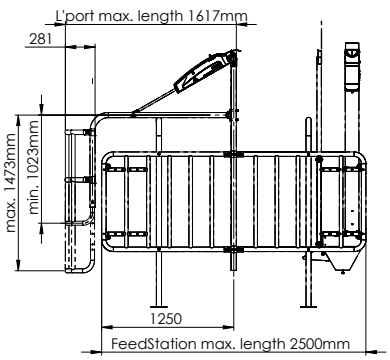

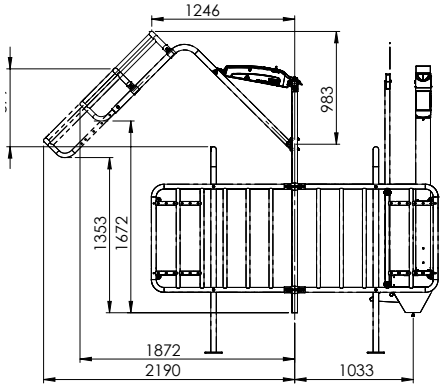

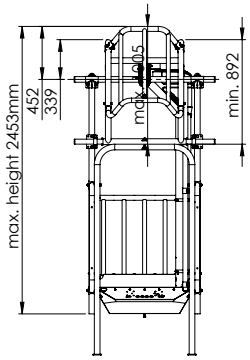

COMPONENTS



Cross bracket hot-dip galvanized with 4 bolts
001-910-000 1½" x 1¼" M10x25
001-911-000 1½" x 1½" M10x25



004-121-000
T-clamp 1½" x 1¼"
incl. mounting parts



001-057-000
Tube clamp
1½'' 40 x 5 mm hot-dip galvanized
For mounting L'port on Dairymaster fence



004-349-000
Parallel bracket T'port
for mounting T'port Back on side railings (min. 4 required per T'port)



Airtube PA
(compressor supply)
001-206-000 · Ø8x6 mm /50 m black
001-209-000 · Ø8x6 mm /100 m black



Airtube PA
(supply compressor valve)
001-459-000 · Ø12x10 mm /100 m wit



001-221-000
Valve 3/2 1/8"
without coil



001-579-000
Micro flow regulator
For L'port delivered 2006-2010 1/8" x 1/8"
(two-sided adjustable)



001-815-000
Micro flow regulator
For L'port delivered from 2010



002-480-000
Control box L'port
With 3-position switch



004-144-000
DeLaval clamps 1¼", Ø42,4 x 2,6 mm
for Delaval feedingstation deliverd after 2017



001-005-001
Cylinder lubricant 20 g



004-250-200
Set support tubes 1½" x 1¼" with clamps
fits Delaval and Lely feeding station



Repair kit
001-422-000 - Cylinder L'port closing gate Ø63 mm
004-348-000 - Cylinder T'port gate Ø50 mm
005-543-600 - Cylinder repair kit Ø80 mm



001-688-000
Cylinder end Ø63 mm
Incl. sealing rings and fastening bolts

COMPONENTS FOR DRY AND CLEAN AIR

001-620-000
Filter element for regulator 002-206-000
Should be replaced annually



002-209-000
Filter set (2 pieces) FP 1/2 for pressure regulator 002-208-000
Should be replaced annually



002-207-100
Pressure regulator with filter, moisture trap and autom. water drain, Ø12 push-in
To secure uprights of L'port to side rail.



011-187-000
Complete set for air supply
all products below in one set



002-207-000
Pressure regulator for 12 mm air pipe
with filter, moisture trap & automatic water drain, 12 mm



002-204-000
Condensate drain
Time controlled ¼", 230V



001-164-000
Connection cable 5 m
With plug (230V)



001-645-000
Elbow 3/8" x 8/6
Push-in fitting (connection under tank compressor)



004-142-000
Push-in
Ø12 (push-in) - 8 mm, RL8 LVSI



082-253-050
Air tube PA12W
PA12W/50 meter 12x10mm black



001-630-000
Push in
1/4''x12mm



001-379-000
Air tube PA
PA/25 meter 8x6mm black

Air consumption in continuous use is ±7 litres per minute, per L'port/T'port

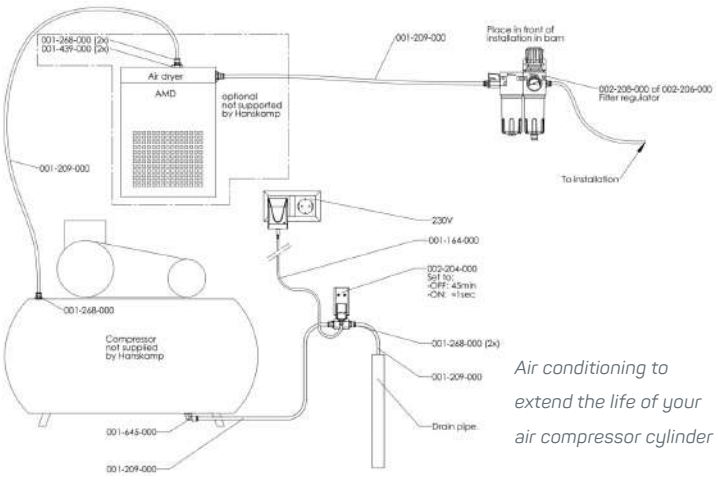

Air conditioning to extend the life of your air compressor cylinder



MultiDos

Dispensing liquids automatically



MultiDos
Container (34 L) & 1 pump
1 liquid for 1 feed station



MultiDos
Container (34 L) & 2 pumps
1 liquid for 2 feed stations



MultiDos
1 pump in housing
1 liquid from own stock

Spider	036-211-005	036-212-005	036-213-005
BouMatic*	035-351-005	035-352-005	035-353-005
Dairymaster	036-341-005	036-342-005	036-343-005
DeLaval	036-331-005	036-332-005	036-333-005
Fullwood	035-351-005	035-352-005	035-353-005
GEA voerstation	036-211-005	036-212-005	036-213-005
GEA Mlone	035-251-005	035-252-005	035-253-005
GM	035-151-005	035-152-005	035-153-005
Lely A2	036-411-005	036-412-005	036-413-005
Lely A3	-	-	036-463-005
Lely A4 / A5**	036-471-005	036-472-005	036-473-005
Lely Cosmix	036-441-005	036-442-005	036-443-005
Insentec/Idento	035-151-005	035-152-005	035-153-005
Nedap	036-111-005	036-112-005	036-113-005
SAC (Nedap)	036-311-005	036-312-005	036-313-005
SAC 24V AC	036-331-005	036-332-005	036-333-005

** The BouMatic 110V requires a power supply and a relay, please enquire with our inside sales department.*

- MultiDos comes with nozzle (003-518-000), rotor (003-524-001), Q-prene hose (003-512-005) and 5 metres of transport hose (001-006-001).

*** Check whether an fps sensor is present, we also have a solution for this.*

Max. suction hose length: 2 meter

Max. output hose length: 5 meter

Not for molasses-like products.

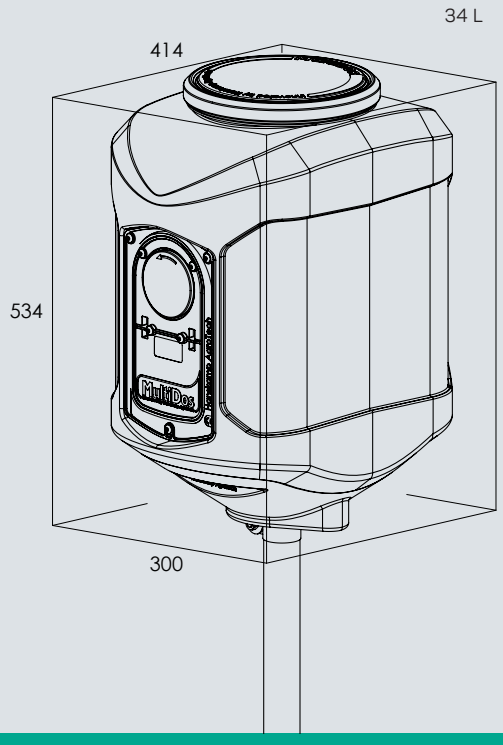

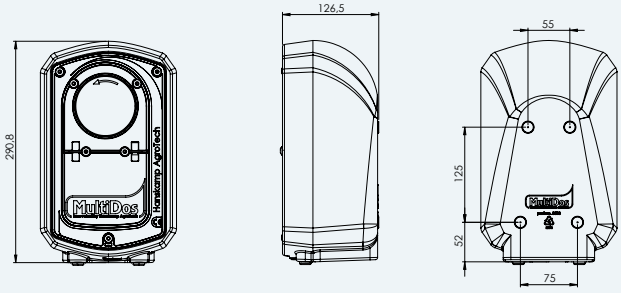

RECOMMENDED FOR INSTALLATION



001-909-000
Cross bracket 1¼" x 1¼"
Attachment of MultiDos to the feeding station



003-521-000
Container attachment pipe 1¼" x L =1190 mm
galvanized



003-521-009
Container wall mounting hardware



003-505-100
MultiDos Container
Without pump including wall bracket

MultiFill

Filling the MultiDos container automatically from the storage tank

MultiFill 003-561-005

Max. suction hose length: 2 meter Max. output hose length: 75 meter

- The MultiFill comes with mounting hardware. Does not include float set (002-260-000) and hose (001-006-001).
- One float set is required per MultiDos container.
- Please indicate preferred colour (black, blue, green, orange, or red) in your order.
- Check the MultiDos pump in housing for the MultiFill measurements on page 20.
- incl. sensor and alarm function after 6 hours



- Automatic refill from the storage container
- Easily check the filling level of the storage container
- No more worrying
- MultiFill takes work off your hands



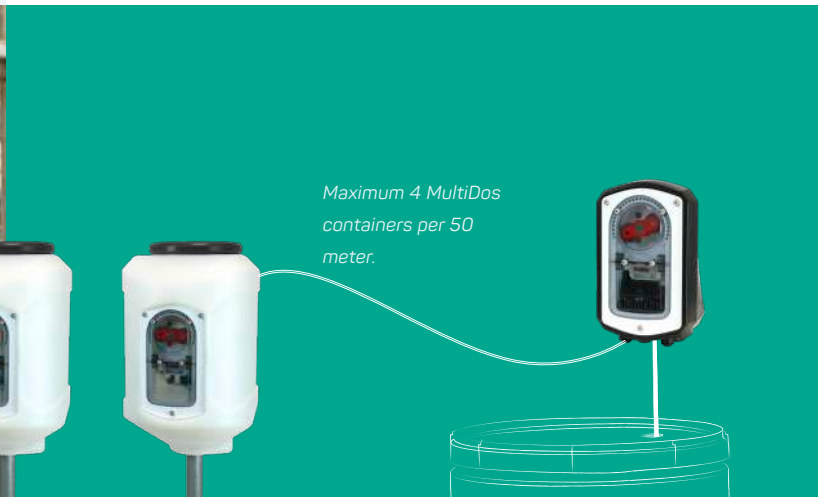

COMPONENTS MULTIDOS



003-518-000
Nozzle
In stainless steel holder, opening 2.5 mm
003-544-000
Nozzel holder Lely A4/A5



003-524-001
Rotor
Incl. rollers, bearings & rotor parts



003-512-005
Tube Q-prene MultiDos
0.53 m incl. mounting parts, replace every year



003-572-000
Bulkhead coupling



003-517-000
NEW! Wall bracket for wall mounting

COMPONENTS MULTIFILL



003-529-005
Tube Q-prene MultiFill
0.48 m incl. mounting parts



001-007-001
PVC transporttube
Ø7x10 m (on roll of 50 m)



001-171-000
Tube connector set to 10x14 tube
001-171-001
Tube connector set Ø10x14mm to Ø7x10mm tube



011-245-000
MultiFill motor
incl. sensor and alarm function after 6 hours



002-260-000
Float valve set
1 set per container needed

PipeFeeder

Non-spilling feeder

For concentrate pellets and raw material mixtures

Available in three serving versions:

10 grams - 280 grams p/m, 35 grams - 980 grams p/m and 50 grams - 1.4 kg p/m. Available in five different colours: black, green, blue, red and orange.

Long version
1926 mm
26 L= 16,6 kg



227-134-000 ·

Standard version
1440 mm
20 L = 12 kg

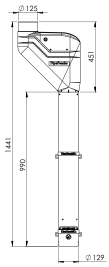

227-124-000 ·

Short version
1140 mm
16 L = 9,6 kg

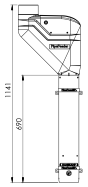

227-114-000 ·

Extra short version
821 mm
11,4 L = 6,8 kg

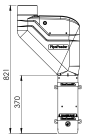

227-104-000 ·

Above are standard versions, prices may fluctuate.

Suitable for parlour feeding or
feed at regular intervals with automatic start

COMPONENTS



011-102-000
Mounting bracket Ø129 mm
2 brackets included with every PipeFeeder



011-102-001
Mounting bracket M10
For mounting on 1" tube

011-102-002
Wall bracket Ø129 mm
For mounting the PipeFeeder to the wall



001-934-000
Connector DC motor M8
For isolation between the motor and the drive shaft



002-104-000
Attachment sleeve, can be customized to Ø70, 80, 90, 100, 110 or 125 mm
For connecting the PipeFeeder to auger feed pipe



002-053-000
Drop tube Ø129 mm
L = 990 mm to expand to two types of feed



001-890-000
Motor frame

PIPEFEEDER STAND-ALONE



002-350-000
ControlPanel
No ControlUnit necessary



002-340-000
ControlPanel 0-2 kg, 0-4 kg, 0-8 kg
Specify required scale with your order



001-491-000
Mounting part for ControlPanel
Also applicable to latest version ControlPanel



002-812-000 **PowerUnit 10A up to 16 motors**
002-813-000 **PowerUnit 20A 16 to 31 motors**



001-965-000
Cable 2x1.5 mm LiYY /100 m

INTERESTING FOR LELY



001-358-000
Updated! PipeFeeder for Lely A4 and A5
Set with PipeFeeder (1140 mm) with IM pulse motor
and plug & play mounting bracket



011-235-000 **Cable set with plug 10m IM pulse, suitable for Lely A4/A5**
011-235-001 **Cable set with plug 3m IM pulse, suitable for Lely A4/A5**



002-006-000
Cable set with plug for Cosmix installation

New! Now with handy parlour monitor!
Demo via: spider.hanskamp.nl



Coupled to Spider automation



Number	Article	Number	Article
2x3	009-606-000	2x11	009-622-000
2x4	009-608-000	2x12	009-624-000
2x5	009-610-000	2x13	009-626-000
2x6	009-612-000	2x14	009-628-000
2x7	009-614-000	2x15	009-630-000
2x8	009-616-000	2x16	009-632-000
2x9	009-618-000	2x17	009-634-000
2x10	009-620-000	2x18	009-636-000

This controller is supplied incl. Spider, PowerUnit, cables, attachment sleeve and mounting material. Excl. PipeFeeders, SpiderAntennas and wall mounting bolts.

Coupled to external cow recognition

Fits on every milking parlour!



Number	Article	Number	Article
2x3	009-006-000	2x11	009-022-000
2x4	009-008-000	2x12	009-024-000
2x5	009-010-000	2x13	009-026-000
2x6	009-012-000	2x14	009-028-000
2x7	009-014-000	2x15	009-030-000
2x8	009-016-000	2x16	009-032-000
2x9	009-018-000	2x17	009-034-000
2x10	009-020-000	2x18	009-036-000

This controller is supplied incl. PowerUnit, cables, attachment sleeve and mounting material. Excluding control unit and wall mounting bolts. There is a possibility to distribute concentrate during milking time with the IM-MT motor. This option is equal in price, please enquire with our inside sales department.

Stand-alone: PipeFeeder with ControlPanel, no transponder needed



Easy installation through renewed IM motor!

Individual

Number	Article
2x3	009-706-000
2x4	009-708-000
2x5	009-710-000
2x6	009-712-000
2x7	009-714-000
2x8	009-716-000
2x9	009-718-000
2x10	009-720-000

Batch

Number	Article
2x8	009-816-000
2x9	009-818-000
2x10	009-820-000
2x11	009-822-000
2x12	009-824-000
2x13	009-826-000
2x14	009-828-000
2x15	009-830-000

This controller is supplied incl. ControlPanels, fixing part for the ControlPanel, cables, attachment sleeve and fixing material. Wall mounting bolts not included. PipeFeeder parlours larger than 2x10 are possible, please ask our sales department.



- Suitable for all possible angles (30° - 70°)
- Clever design makes water run off easily
- Quick and easy assembly

MultiFrame

Robust milking parlour frame (30° - 70°)

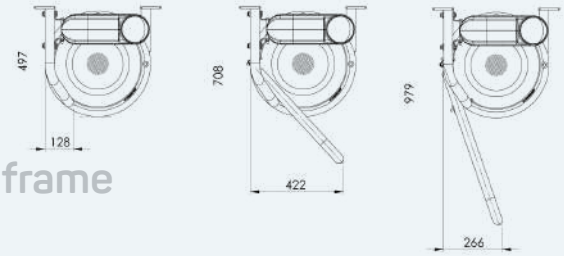

	MultiFrame 30° basic frame with perforated manger	MultiFrame 40°, 50° & 60° basic frame + short partition fence with perforated manger	MultiFrame 70° basic frame + long partition fence with perforated manger
Left	075-121-000	075-221-000	075-321-000
Right	075-111-000	075-211-000	075-311-000

COMPONENTS



007-501-000
Frame right
For 30° without side partition, can be extended with 007-504-000 or 007-505-000



007-502-000
Frame left
For 30°, without side partition, can be extended with 007-504-000 or 007-505-000



007-522-000
Perforated manger
Ø 425 mm, holes Ø 1.5 mm



007-522-001
Manger
Ø425 mm, with hole Ø 20mm, with plug



007-504-000
Side partition short
Suitable for angles 40°, 50° & 60°



007-505-000
Side partition long
Suitable for angles 70°



007-506-000
Mounting hardware set
For mounting the side partition on the frame



007-536-000
Rail
50x30x3 l=2000



011-280-000
Mounting bracket for Rapid Exit Milking Parlor

RECOMMENDED FOR LOCATION RECOGNITION



007-524-000
Support for reader
For cow identification Delaval neck transponders



007-525-000
Support for reader
For Spider or Nedap cow recognition on MultiFrame



007-535-000
Set with ear recognition for MultiFrame



Set with cable protection tube
007-530-000 Antenna for neck transponders
007-531-000 Antenna for leg transponders
007-534-000 Antenna for ear transponders



Shield plate (anti-jamming)
007-526-000 For MultiFrame 30°

PipeFeeder HighSpeed

Feeder for the rotary's - 20 kg per minute



	One typ of feed	Two types of feed with Dump	Three types of feed with Dump	Four types of feed with Dump
PipeFeeder short (1146 mm) PipeFeeder Dump	029-110-030	2x 029-110-030 1x 029-019-001	3x 029-110-030 1x 029-049-001	4x 029-110-030 1x 029-049-001
MotorController for extremely accurate feeding!	002-816-000	002-817-000	002-818-000	002-819-000
SmartPanel for stand-alone feeding without cow recognition	002-345-120	002-345-223	002-345-323	002-345-423

For extra precision!



Fully electric, no compressed air or vacuum required!

- Fits in every rotary
- Efficient feeding without waste
- Robust stainless steel dispenser



MultiDos HighSpeed

Dispensing liquids in the rotary - 1,5 liters per minute

for water-thin liquids
not for Melasse

2x MultiDos HighSpeed	037-123-005
1x MotorController	002-816-000



26 Motors
and general parts

MOTOREN

MOTORS



001-652-000
Improved! **Intelligent Motor (IM) 28 RPM**



001-652-10m
Improved! **Intelligent Motor milking time (IM-MT) 28 RPM**
Specify desired dispensing time when ordering



011-021-000
SolidState 5
28 RPM, Spider · VC3 · VC4 · VELOS



011-095-000
RIM time controlled
28 RPM, DeLaval · Fullwood · SAC · G.M.



011-125-000
Renewed! **RIM Pules controlled** Lely A4/ A5, Cosmix and air-controlled
28 RPM, see for cable24V DC (GEA/ Westfalia)



001-001-000
Motor 40 RPM
Grey with cable 24V DC (GEA/Westfalia)



001-440-000
Motor 40 RPM
Grey without cable 24V DC (GEA/Westfalia)



001-101-000
Cable 2,5 m
With plug for dosing motor 001-440-000



011-205-000
Vibrating motor
To prevent bridging in stock

MOTORS



011-038-000
Motor 24 V AC for MultiDos
10 RPM time controlled



001-631-000
Black motor HighSpeed
120 RPM 24V DC, dons't fit on MD HS

AUGER



002-514-000
Auger 100 g
With stainless steel auger cup with SolidState 5;
2.8 kg/ min. (also available with different motors)

001-360-000
Motor frame and auger tube



001-361-000
Auger cup
Stainless steel



001-365-000
Bolt M6x95 stainless steel



001-537-000
Insulation paper



001-535-000
Plastic Insulation element



001-534-000
Coupling element M8

PROPYDOS



001-147-000
Valve set PropyDos



001-018-000
PropyDos cylinder



001-131-000
PropyDos cylinder
with valve set

GENERAL PARTS



Power with boost 24V DC

002-812-000	PowerUnit 10A
002-813-000	PowerUnit 20A

Hanskamp online!

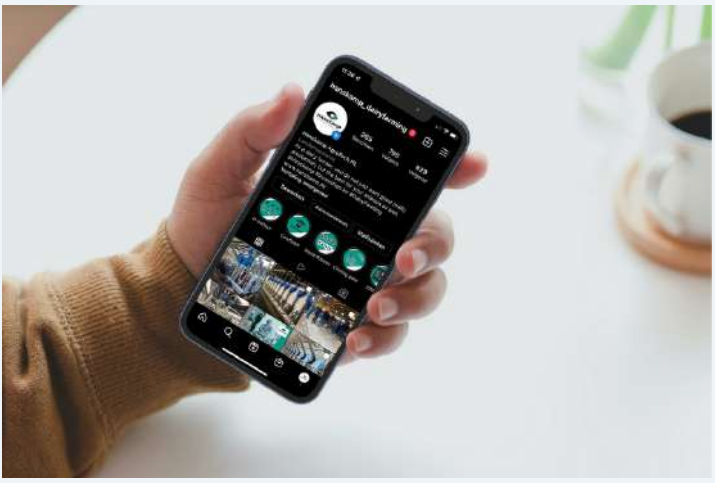

Follow us on Facebook, Instagram, TikTok and LinkedIn!

www.hanskamp.com

Couldn't find what you were looking for? Please contact us!

We are at your service Monday to Friday from 8am to 5pm.

You can reach us via email at info@hanskamp.com, by phone or via WhatsApp at +31 314 393 797.

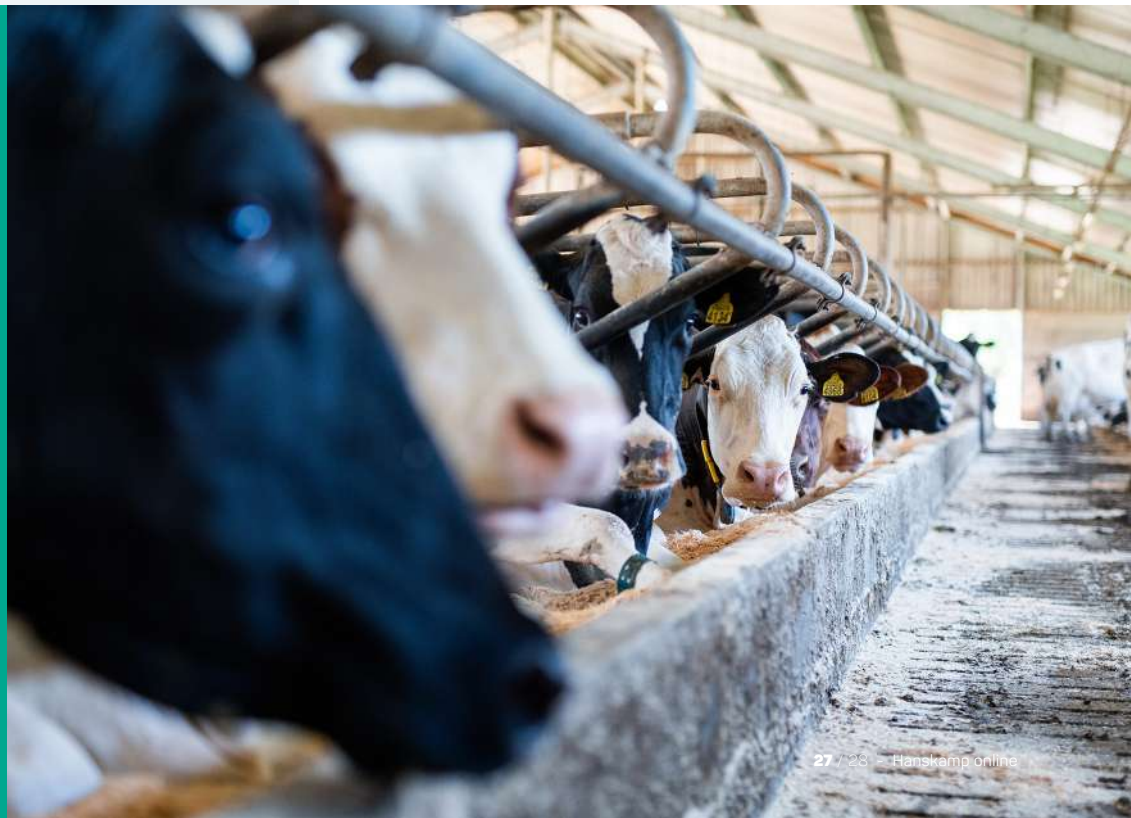

HANSKAMP
Innovation for dairy farming

INNOVATION FOR WORLDWIDE DAIRY FARMING

Customized advice

Feel free to contact us for a quote or any specific questions. Our sales support team gladly helps you find the suitable solution for your specific problem.

Newsletter

Stay up to date with the our new inventions at Hanskamp and sign up for our newsletter at

www.hanskamp.com/en/newsletter

Disclaimer

Although the content of Hanskamp AgroTech BV's catalogue has been compiled with the utmost care, Hanskamp AroTech BV accepts no liability for direct or indirect damages resulting from mistakes or errors in this catalogue. No rights can be derived from the information in this catalogue. The information and prices in this catalogue are not binding and may be changed at any time without notification. The prices in this catalogue are product prices. Service and maintenance are not included. Hanskamp AgroTech BV reserves all intellectual property rights and other rights related to all information provided in or through this catalogue (including all text, graphics, logos, etc.). Reproduction of this catalogue, or parts thereof, is not allowed without written permission by Hanskamp AgroTech BV. The company names and product names mentioned in this catalogue are trademarks of their respective owners. Reproduction of third party brand names in this catalogue is intended to support the information for the reader. Hanskamp AgroTech BV tries to reproduce third parties' trademarks objectively, not to discriminate between trademarks and not to infringe on the trade mark rights. All legal relationships with Hanskamp AgroTech BV or affiliates, in which Hanskamp AgroTech BV operates as seller of goods and/or supplier of services, are subject to the general terms of delivery. These terms will be sent free of charge upon first request. By using information provided through this catalogue, you agree to the applicability of this disclaimer.

Xenonstraat 6
7031 HX Wehl, The Netherlands

tel +31 (0)314 - 393 797

e-mail info@hanskamp.com
internet www.hanskamp.com