FeedStation Walk-Through

043-000-000
& 044-000-000

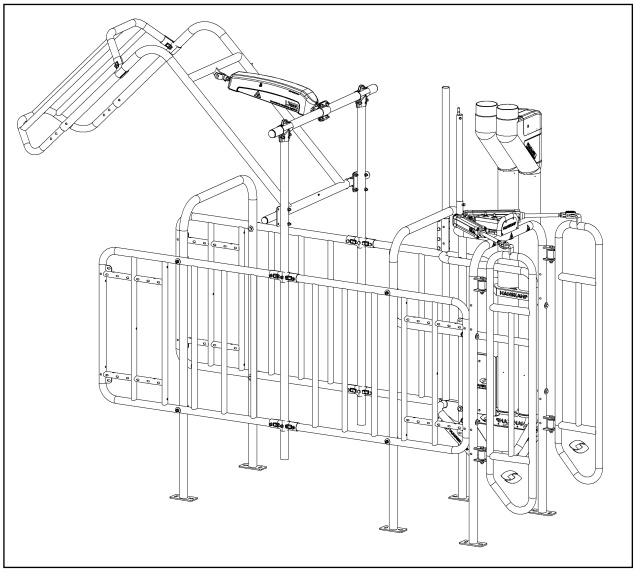

Voerstation
Out of parlour feeder
Futterstation
Distribution alimentation concentré (DAC)

Installation and operating instruction **EN**

HANSKAMP
Innovation for dairy farming

Article number: 010-093-000

Date: January 2019
Version 2.4 - Translation of Original instruction for use
According to Annex 1 chapter 1.7.4 Machine guideline 2006/42/EG

Doetinchem,
The Netherlands
www.hanskamp.nl/en

Preface

Manuel Contents

This manual contains the information necessary for the correct installation and operation of a Hanskamp FeedStation walk-through. Study and understand this information thoroughly before configuration of the FeedStation walk-through. Failure to do so could result in damage to equipment. Please consult your milking equipment dealer if you do not understand the information in this manual, or if you need additional information. All information in this manual has been compiled with care. Hanskamp shall not be liable for errors or faults in this manual. The recommendations are meant to serve as guidelines, All instructions, pictures and specifications in this manual are based on the latest information that was available at the time of publication. Your FeedStation walk-through may comprise improvements, features or options that are not covered in this manual.

Applicability

The table below shows the type of the FeedStation walk-through for which this manual is applicable.

Model designation

Model	Model number
FeedStation walk-through	044-000-000

Contact number Local Service Provider

We suggest you write the name, address telephone number and e-mail address of your local service provider contact in the table below. This makes sure you can easily find the information.

Name	
Address	
Telephone number	
E-mail address	

1. Introduction

The Hanskamp walk-through concentrate feeding station allows cows to exit from the front, catering to their natural behaviour. Many feeding stations require the cows to exit the station backwards. Cows trying to exit the station are often bumped into by other cows trying to enter; this can result in injuries to udders and legs. We prevent this by closing the station at both ends and allowing the cow to exit from front. This also relieves the cows' hooves and legs. An additional benefit is that particularly low-rank cows feel safer.

The Hanskamp FeedStation walk-through consists of a side fence with a fixed feed trough, 3 additional side fences, a PipeFeeder feed dispenser, and an L'port closing gate at the back of the station. The front of the station is fitted with a T'port closing gate. Optionally, the station can be expanded with an extra feed type by adding an additional PipeFeeder and MultiDos with container.

The information in this manual is for farmers and mechanics.

- Dairy farmers use the information provided to test and calibrate the FeedStation walk-through or to display reports.
- Mechanics can use the information to install and setup the FeedStation walk-through.

2. Safety

2.1 Introduction

The safety alert symbol identifies important safety messages on your FeedStation walk-through, L'port and T'port in the manual. When you see this symbol, be alert to the possibility of personal injury or death. Follow the instruction of the safety message.



Safety Alert Symbol

2.2 Signal Words

Note the use of the signal words DANER, WARNING and CAUTION with the safety messages. The signal word for each message uses the following guidelines:



Warning! *Indicates a potentially hazardous situation that, if not avoided, could result in death or serious injury, and includes hazards that are exposed when guards are removed.*



DANGER! *Indicates a imminently hazardous situation that, if not avoided, will result in death or serious injury.*

2.3 Safety instructions

You are responsible for the SAFE operation and maintenance of your FeedStation walk-through. YOU must make sure that you and anyone else who is going to operate, maintain or work in the vicinity of the FeedStation walk-through knows all the related SAFETY information in this manual.

YOU are the key to safety. Good safety practices protect you and the people around you. Make these practices a working part of your safety program. Make sure EVERYONE who operates, maintains or works near the FeedStation walk-through obeys the safety precautions. Do not risk injury or death by ignoring good safety practices.

- FeedStation walk-through owners must train operators before they operate the FeedStation walk-through. This training must be repeated at least annually.
- The operator must read, understand and obey all safety and operating instructions in the manual.
- A person who has not read and understood all safety and operating instructions is not permitted to operate the FeedStation walk-through.
- Do not modify the equipment in any way. Unauthorized modification may impair the function and/or safety and could affect the life of the equipment, and persons.
- Only use approved spare parts, and make sure they are only installed by authorized technicians.

2.3.1 General Safety

- Read and understand the manual and all safety signs before you connect power supplies to operate or adjust the FeedStation walk-through.
- Only trained persons are permitted to operate the FeedStation walk-through. A first-aid kit must be available near the FeedStation walk-through. Store in a highly visible place.
- A carbon dioxide or foam fire extinguisher must be available near the FeedStation walk-through. Store the fire extinguisher in a highly visible place.
- Install all protective covers and guards before operate the FeedStation walk-through.
- Wear the correct protective clothing and equipment. Disconnect and isolate the electrical power supply before you clean or do maintenance on the FeedStation walk-through, also be sure that the compressed air supply is depressurised.
- Know the emergency medical centre number for your area.
- Contact your nearest milking equipment dealer provider if you have any questions.
- Review safety related items with all operators frequently (annually).

2.3.2 Electrical Safety

- Only an authorized electrician must install the electrical power supply for the FeedStation walk-through.
- Make sure the electrical grounding of the electrical system and all parts of the FeedStation walk-through meet the local rules and regulations.
- Replace any damaged electrical lines, conduits, switches and components immediately.
- Isolate the electrical power supply before you open the lid of the FeedStation walk -through to work on the electrical system.

2.3.3 Installation Safety

- Read and understand the instruction in this manual.
- Make sure the FeedStation walk-through is correctly installed.

2.3.4 Operating Safety

- Read and understand the applicable manual and all safety signs before you connect power supplies to operate or adjust the FeedStation walk-through.
- Only trained persons are permitted to operate the FeedStation walk-through.
- Switch off the electrical power supply before you clean or do maintenance on the FeedStation walk-through. Be sure that the compressed air supply is depressurised, switch the compressor of and close the air valve.
- Install the covers and guards before you operate the FeedStation walk-through.
- Keep hands, feet, hair and clothing away from all the electrical parts.
- Keep unauthorized persons, especially small children away from the FeedStation walk-through at all times.
- Before the electrical supply is attached to the FeedStation walk-through, make sure all parts are tight and that all the parts are in good condition.
- Contact your nearest milking equipment dealer if you have any questions.

2.3.5 Maintenance Safety

- Read and understand the applicable manual and all safety signs before you connect power supplies to operate or adjust the FeedStation walk-through.
- Only trained persons are permitted to maintain the FeedStation walk-through.
- Switch off the electrical power supply by taking plug out before you clean or do maintenance on the FeedStation walk-through.
- Wear protective clothing and safety goggles when you do work on the pneumatic system.
- Make sure all the covers and guards are installed when maintenance work is complete.

2.3.6 Safety Decals

- General safety messages appear in this safety messages section. Specific safety messages are in applicable parts of this manual when potential hazards may occur if the instructions or procedures are not followed.

2.3.7 Compressed air quality prescription

Lubrication:
The cylinders have been designed for use with unlubricated air, in which case no maintenance is required. If lubricated air is used, lubrication must be continuous because the additional lubrication removes the lubricant applied at the factory.
Recommended oils :ISO and UNI FD22 (Energol HPL; Spinesso; Mobil DTE; Tellus oil).

Air:
With reference to ISO/DIN 8573-1, the compressed air to use is class 3-4-3, i.e.:

- Solid particle classe 3: 10.000 particles/m³ with d≤5 micron.
- Humidity classe 4: Pressure dewpoint ≤ + 3°C
- Oil classe 3: Concentration total oil ≤ 1mg/m³

Remaining:

Max. pressure	:10bar (valves, cylinders).
Min. pressure	:2,5bar (valves).
Supply pipe	:Ø8 to Ø12mm.
Pipe between articles	: Ø6 to Ø8mm.

Warning! Be sure that the flow regulator and end cushioning not completely turned out. These parts are regulating the in– and outgoing speed of the cylinder. When the speed is too high, the cylinder can break. Correct adjustment can be found in relevant installation and user instruction.

Warning! Make sure the cylinder is never mounted under radial forces. The cylinder can handle only axial forces on the piston rod.

3. Installation and user instructions

General description:
Hanskamp's FeedStation walk-through is a universal and modular walk-through feeding station developed to provide individual cows with their portion of concentrate. The FeedingStation walk-through is fitted with PipeFeeder concentrate dispensers and can be expanded to up to two feed types (one PipeFeeder per feed type). In its default configuration, the FeedStation walk-through is also fitted with an L'port closing gate (Item No.: 004-029-000) and a T'port (Item No.: 004-330-002) (fig. 1). These installation instructions will guide you through the installation of the FeedStation walk-through. Always read these instructions in their entirety and observe all safety rules. Visit www.hanskamp.nl/en for installation examples.

Part numbers and names for several components can be found in the appendix.

1

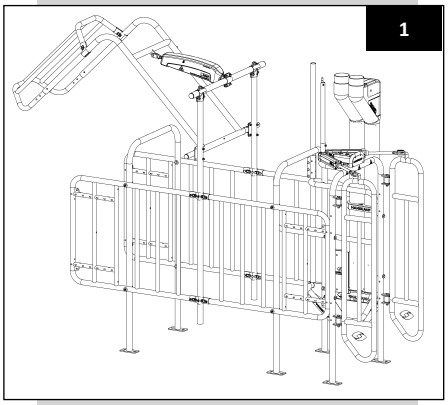

Transport and storage:
The FeedStation walk-through will be shipped on a pallet. This pallet is completely sealed and the corners are covered with tape to prevent damage. The FeedStation walk-through is also stored this way.

Please note! Always use an appropriate vehicle (Forklift truck, pallet fork, pump truck, etc.) to move the pallet.
Please note! Parts may fall off the pallet when it is being unpacked.

2

The pallet includes
(for one FeedStation walk-through 043-061-000):

3x Art. nr.: 004-200-000 FS side fence
1x Art. nr.: 004-306-000 Side fence FS-WT
2x Art. nr.: 004-202-000 Frame FS
1x Art. nr.: 004-321-000 Set of mounting components for FS-WT
4x Art. nr.: 004-115-000 Double. T-clamp 1½" x 1¼"
1x Art. nr.: 028-030-000 PipeFeeder low capp.*
1x Art. nr.: 004-029-000 L'port Closing gate
1x Art. Nr.: 004-330-002 T'port (front) FS-WT

* Variable depending on number of feed types.

Type descriptions;
to be found on the T'port (Art.nr.: 002-481-000)

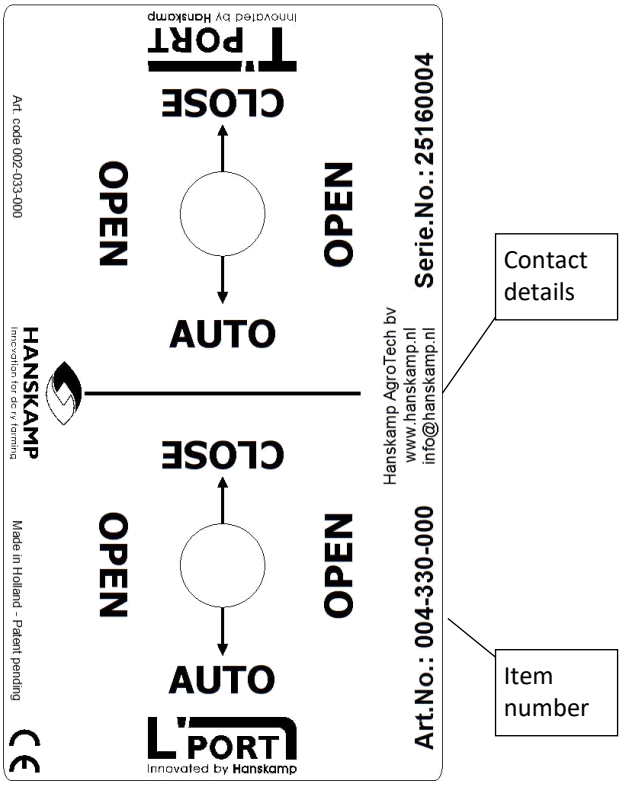

Type description;
to be found on the side fence FS-WT (Art.No.: 004-301-000)

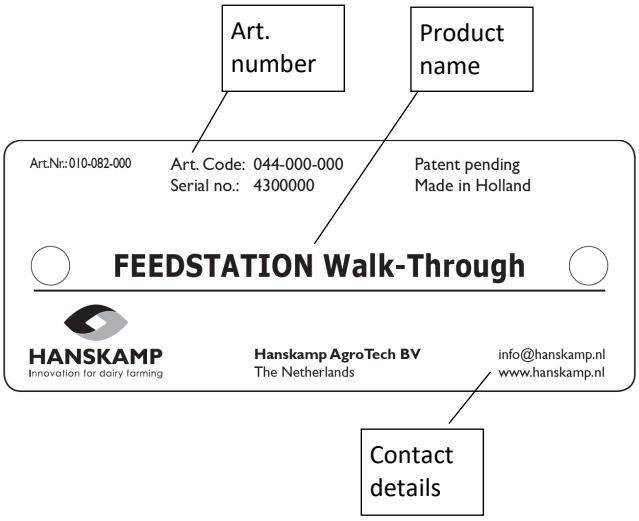

Safety stickers

The user and installer are responsible for the safe operation and maintenance of the FeedStation. Safety stickers are used to ensure safety in and around the FeedStation walk-through. Information about which stickers should be attached where can be found further on in these instructions for installation and use.

Applying the stickers:

- Make sure the surface is dry and clean.
- Make sure the surface temperature is at least 5 °C.
- Find the right position for the sticker.
- Remove a small portion of the foil on the back.
- Place the sticker on the surface and press a small portion of the self-adhesive layer onto the surface.
- Carefully remove the foil and press down the rest of the sticker.
- Remove any air bubbles with a needle and use the foil to smoothen the sticker.

Maintenance of the stickers:

- Keep the safety stickers clean and legible. Clean the safety stickers with soap and water. Do not use any solvents or abrasives that could damage the safety stickers.
- Replace missing or illegible safety stickers.
- Safety stickers are obtainable from Hanskamp. Always specify the item numbers in correspondence.



001-702-000 Warning sticker:
Attach the provided stickers to the moving element where it meets the frame. See figure 5.



001-703-000 Warning sticker:
Attach the provided stickers to the moving element where the hinge tube is inserted, and on the T'port frame. See figures 3, 4 & 5

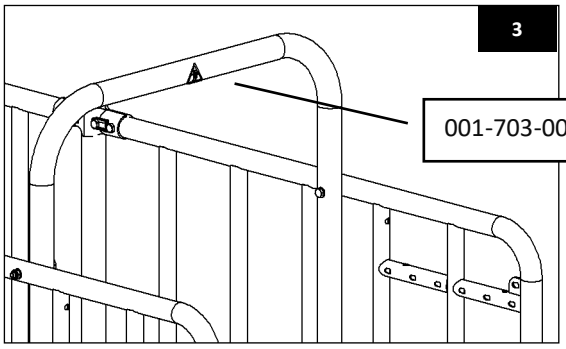



001-755-000 & 010-260-000 Warning sticker:
Attach the provided stickers to the cylinder cover on the piston rod side. See figures 4 & 5

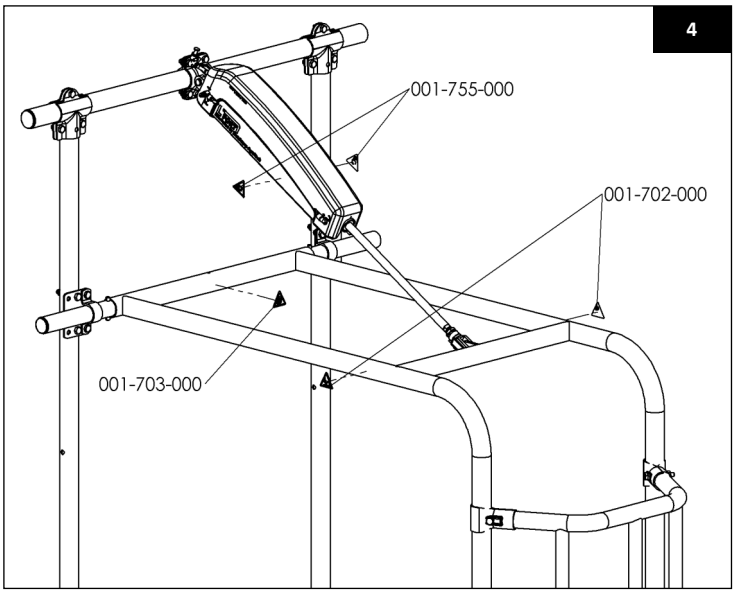

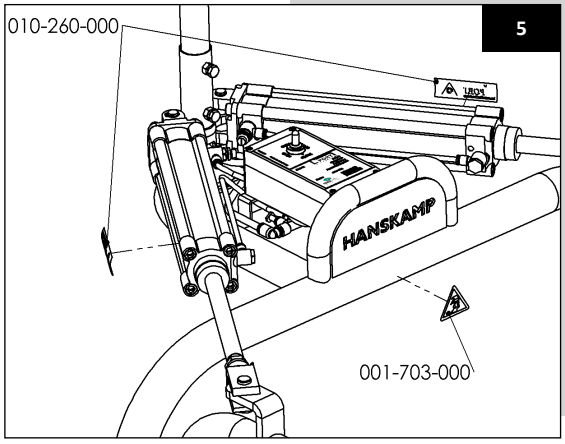

Assembly:

1. Check that all components are present according to the parts list.

Note: The electronics required to control the FeedStation walk-through and accompanying PipeFeeders are not included.
Caution! The FeedStation walk-through must be installed on a correctly constructed and solid surface.
Caution! It must not be possible for cows to lie down in the FeedStation walk-through exit route.

2. Install the side fences (Item No.: 004-200-000) using the double T-clamps (Item No.: 004-115-000)(Figure 6).

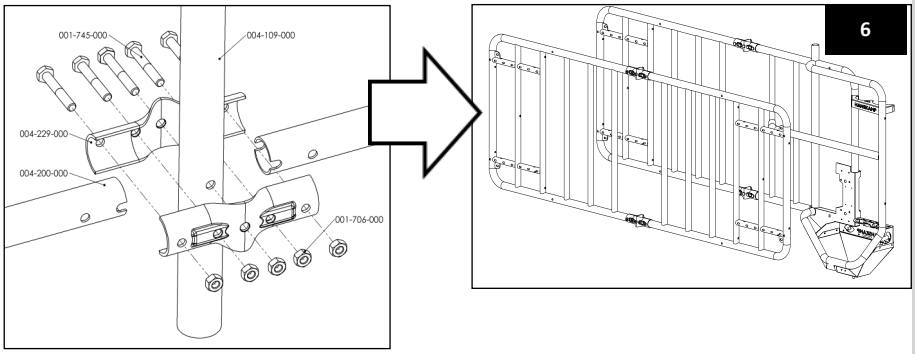

3. Mount one of the two frames (Item No.: 004-202-000) on the feed trough side using the mounting hardware provided (figure 7).

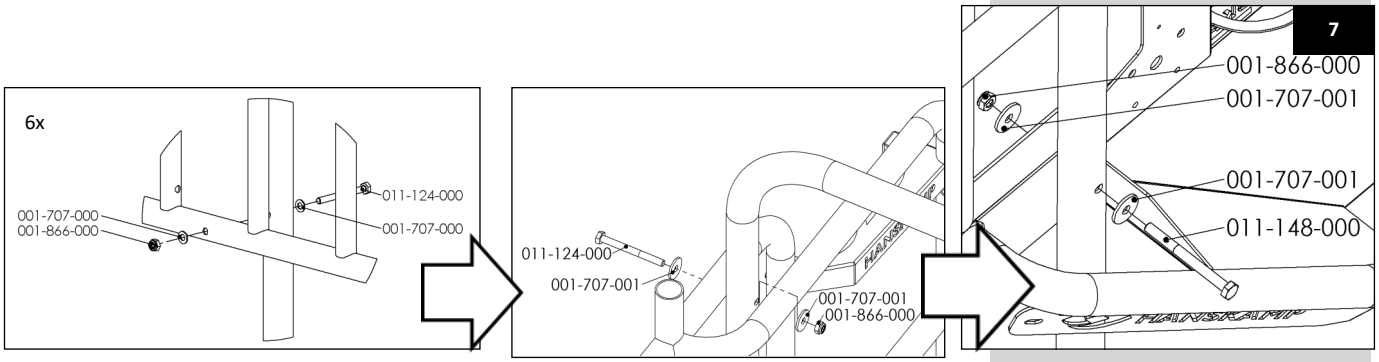

4. Place the seconde frame between the side fences and attach it using the mounting hardware as in step 3 (figure 8).

Caution! Level the side fences and frames (vertically and horizontally) before tightening the bolts (figure 8).

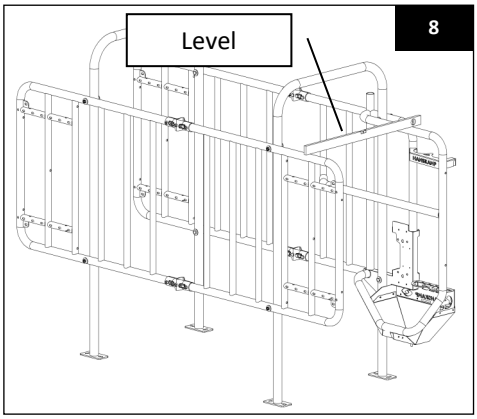

5. Install the uprights (Item No.: 004-109-000) for the L'port closing gate between the side fences (figure 9).
6. Attach the hinge tube mounting hardware to the uprights (figures 10 & 11)

Caution! Do not fully tighten the mounting hardware, or else the hinge tubes will not fit through the pipe brackets.

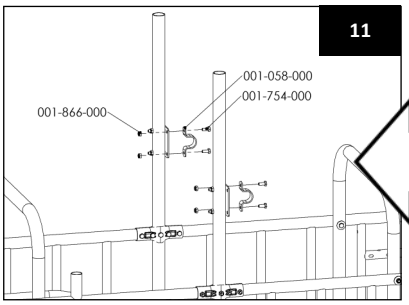

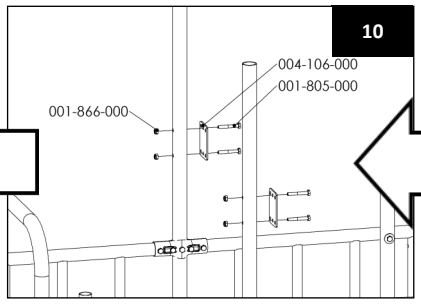

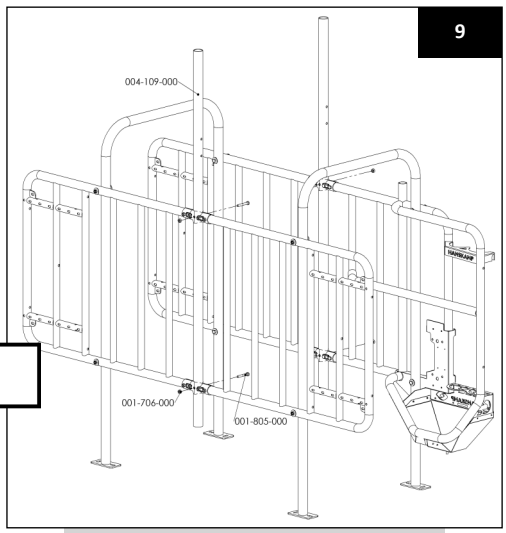

7. Slide the hinge tube (Item No.: 004-108-000) through the pipe brackets and through the moving element (Item No.: 004-111-000). Position it so that it protrudes equally on either side (figure 12).

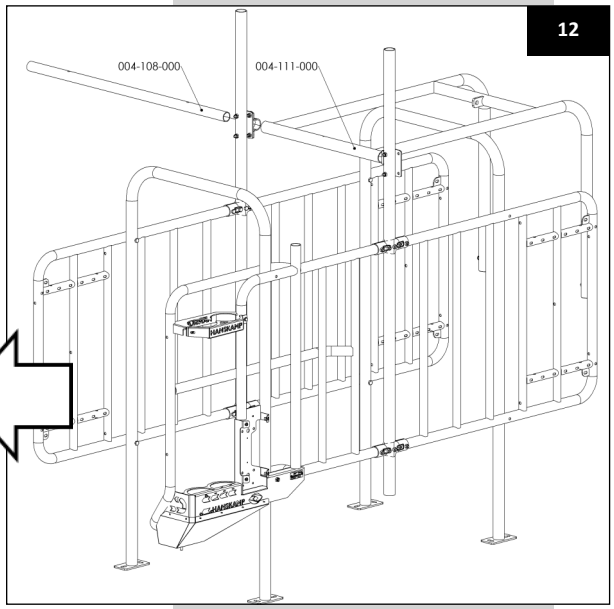

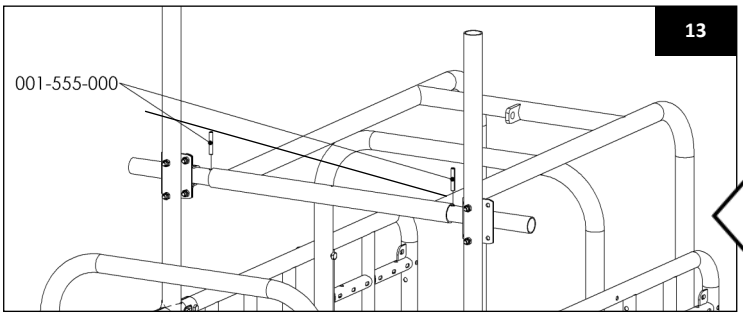

8. Lock the moving elements in place by hammering the tension pins through the hinge tubes (figure 13).
9. Mount the cylinder support tube (Item No.: 004-110-000) to the uprights using the two half-shell T-clamps (Item No.: 004-114-000).
10. Cut the protruding ends of the hinge tube, cylinder support tube, and uprights 1 cm below the double T-clamp (figure 15).

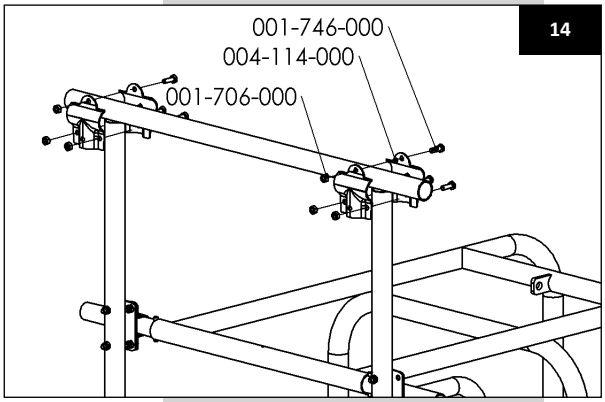

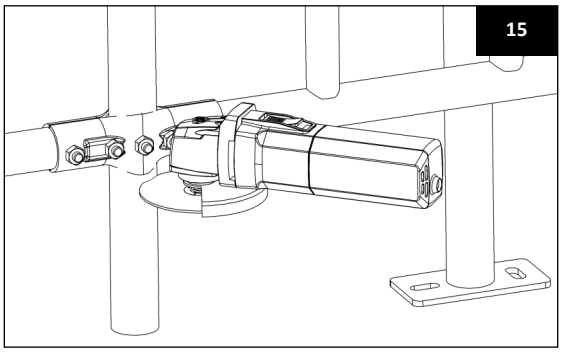

11. Mount the double 4-hole half-shell (Item No.: 004-045-000) in the centre of the hinge tube (Item No.: 004-108-000), making sure that the holes are aligned horizontally, and fasten it.

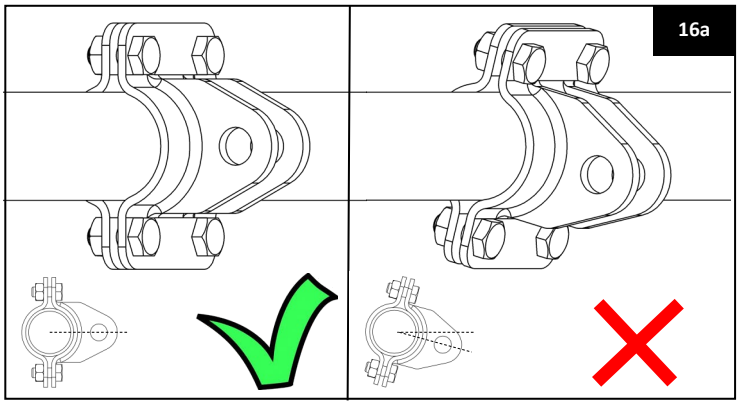
16a

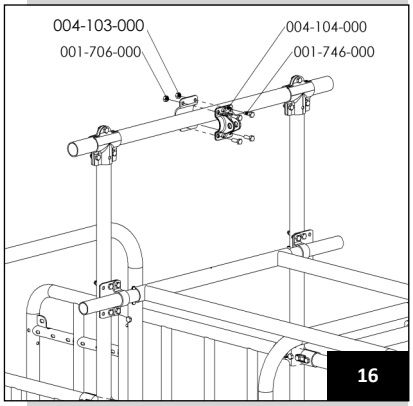

16

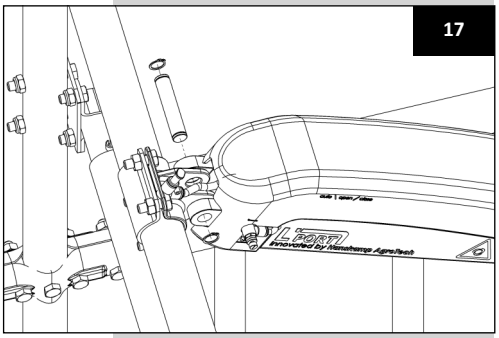
17

Caution!
Make sure that the cylinder mounting tube is fastened securely and cannot rotate in the 3-hole T-clamp.

Also make sure that the 4-hole half-shell cannot rotate on the cylinder mounting tube and that it is correctly positioned in the centre and horizontal relative to the tube, Incorrect installation impede the correct operation of the L'port closing gate.

12. Mount the cylinder set (Item No.: 004-052-000) between the moving element and the cylinder support tube. Attach the pin of the two-sided rear hinge to the double 4-hole half-shell. (figure 17).
13. Attach the cylinder fork to the attachment point on the moving element (figure 18.)
14. Attach the extension element (Item No.: 004-112-000) to the moving element using the provided bolts, nuts, and clamps (Item No.: 001-611-000)(Figure 19).

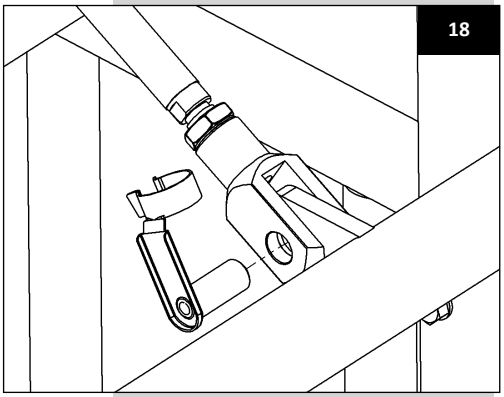
18

Caution! Adjust the extension element carefully to properly protect the cows' udders. Also pay attention to the L'port closing gate's clearance height when it is open.

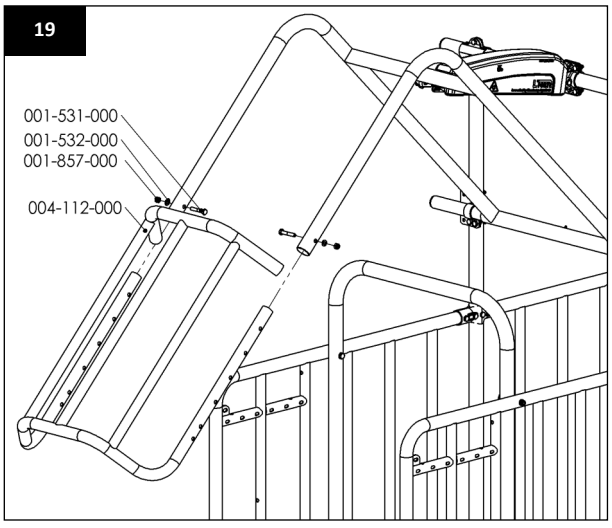

19

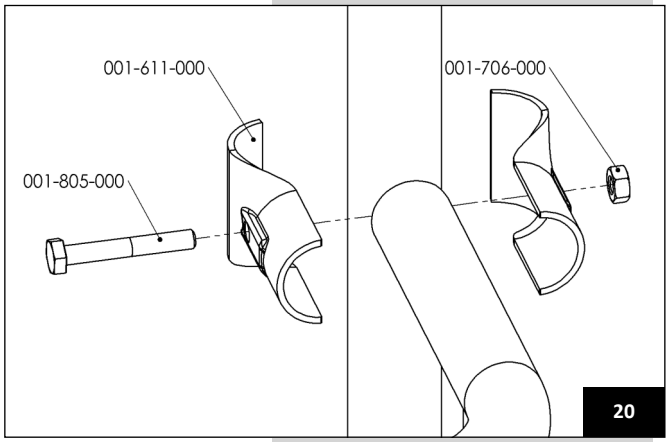

20

T'port (front gate) installation

This is the assembly instruction for the T'port itself. The instructions for installation on the feed station are included elsewhere in this manual.

1. Assemble the two fences (Item No.: 004-331-000) with the bushings (figure 21).

21

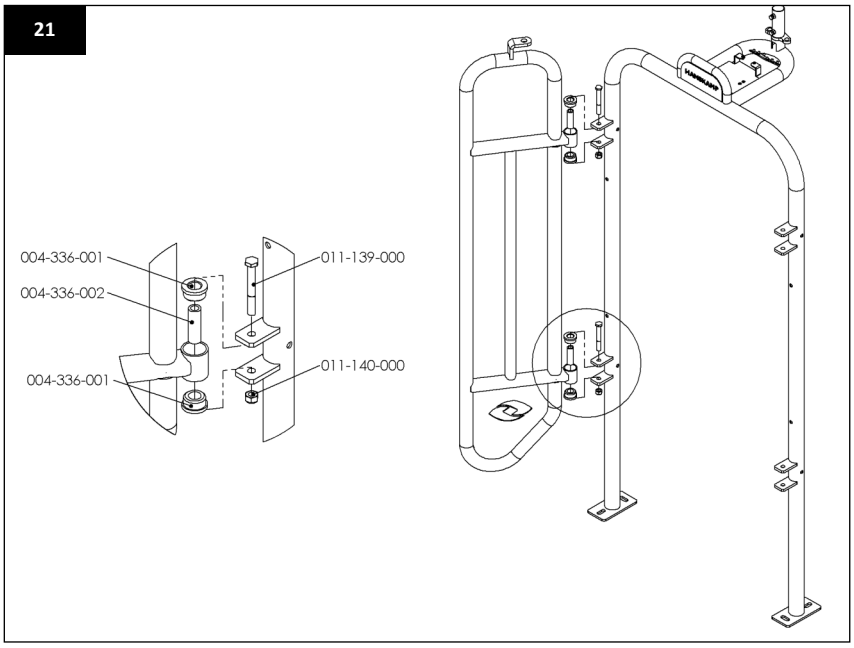

2. Mount the valve to the frame using the provided couplings (figure 22).

22

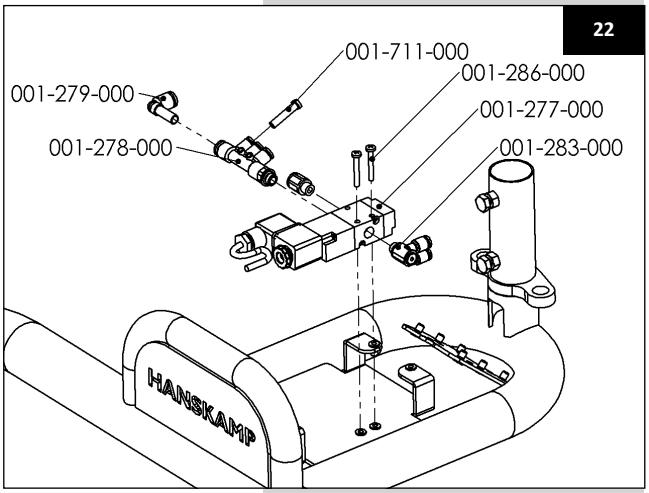

3. Mount the cylinder, making sure that the gates close properly when the cylinder is fully retracted. This can be adjusted by rotating the fork. Lock it in place using the underlying nut (figure 23).

23

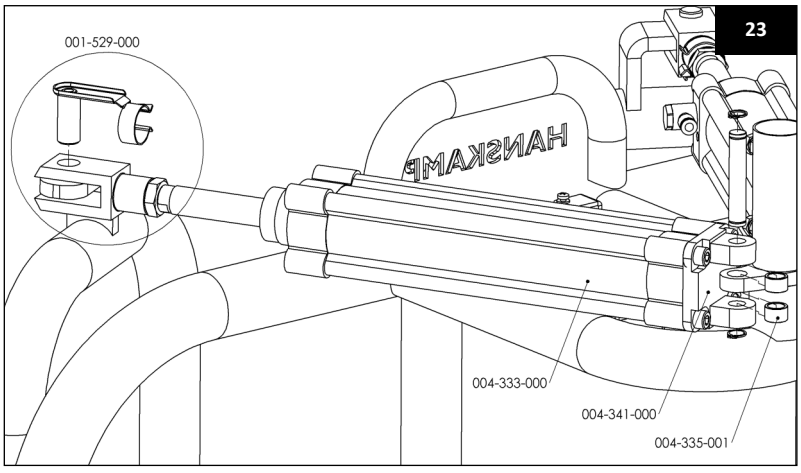

4. Connect the cylinders with the valve using Ø6 PU air tube (Item No.: 001-388-000)(figure 24).

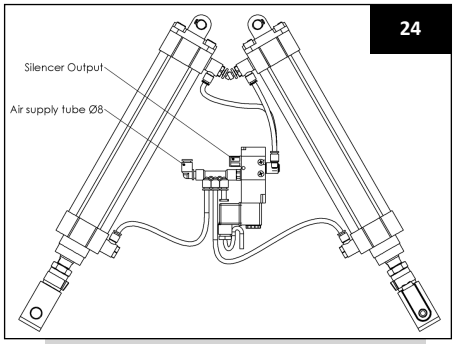

Caution! Make sure that the air tube is long enough to avoid it getting pinched.

5. Mount the cable conduit (Item No.: 004-334-000) to the frame and fasten it with two bolts (Item No.: 011-141-000) (figure 25).

6. Run two Ø8 air tubes (Item No.: 001-823-000) through the cable conduit to the valve. Connect one tube to the “air supply” output and the other to the “silencer output”(figure 24).

7. Attach the air tube connected to the “silencer output” to the silencer (Item No.: 001-346-000) using the plug connector (Item No.: 001-638-000)(figure 26) and fasten it to the top of the cable conduit.

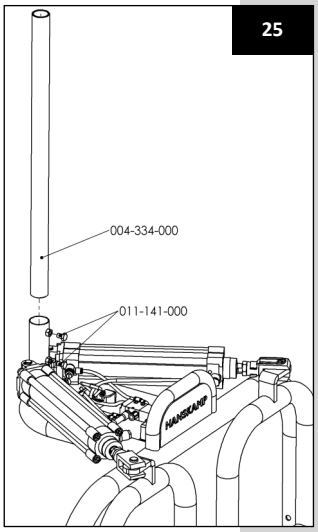

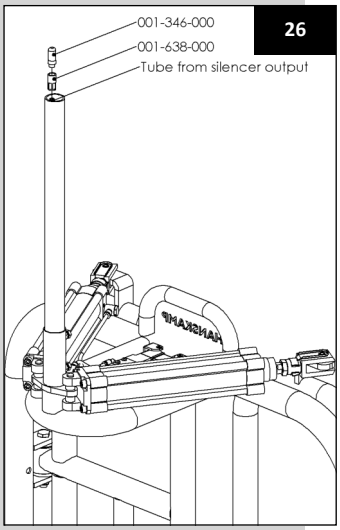

Caution! Install the air tube out of reach of the cows.
Caution! Only use properly conditioned air (clean and dry).
Caution! Make sure that there is no air pressure on the air tube when attaching the cylinder.

8. Make sure that all air tubes lie flat between the lips of the mounting plate on the frame. Attach the control box to the frame using the 4 bolts provided (Item No.: 001-592-000) (figure 27).

9. Attach the sensor (Item No.: 004-338-000) to the mounting plate using the M4x30 bolts (Item No.: 001-286-000) from the underside of the frame (figure 28a). Adjust this sensor according to fig. 28b, by using the adjustment screw.

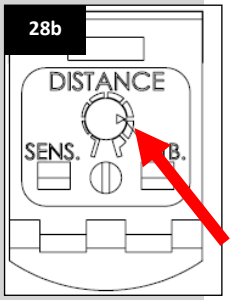

Note! Depicted sensor may differ from reality.
To Adjust the sensor, see datasheet: Item No.: 010-264-000

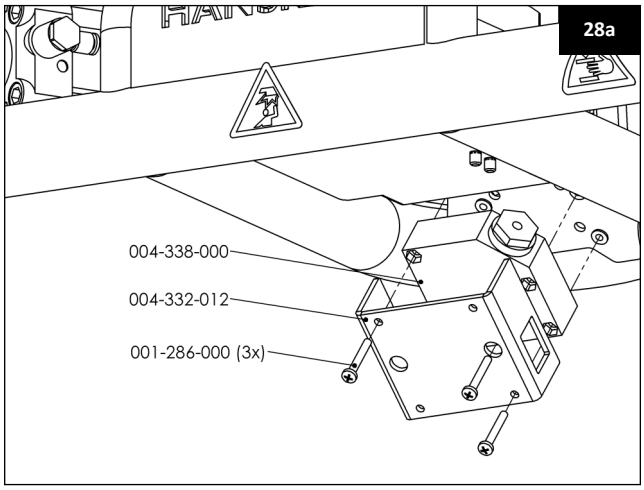

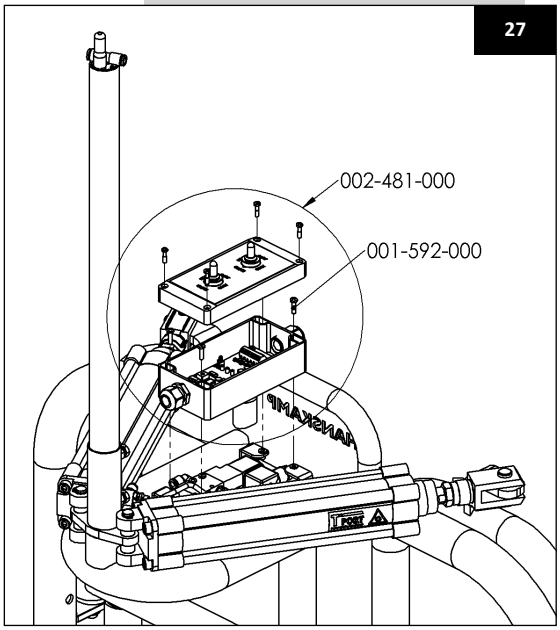

10. Place the entire T'port in front of the FeedStation and mount it to the FeedStation (drill non-existing Ø11 holes) and grates (mounting hardware for these not provided) using the provided mounting hardware (figure 29).

Caution!

Make sure that the T'port gates (Item No.: 004-331-000) have sufficient freedom of movement in front of the station and that the cows have sufficient space to walk out.

29

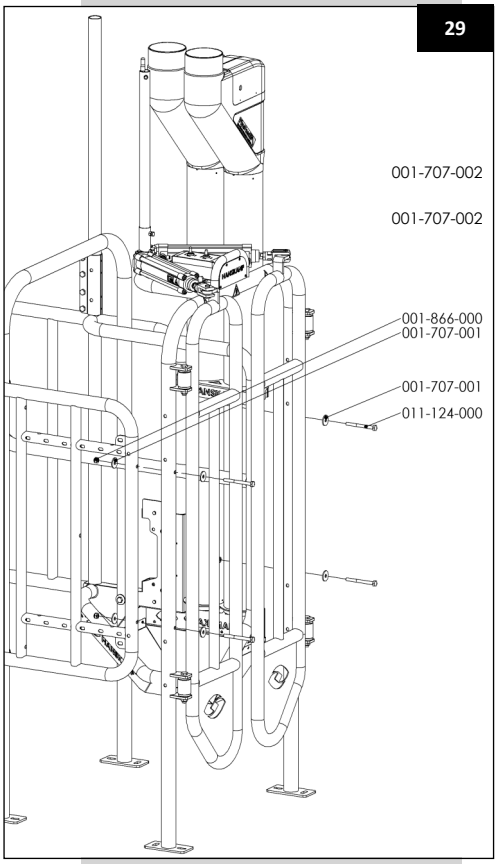

Electrical connection:

The supplied cable (Item No.: 001-593-000) must be connected according to the diagram (figure 30). The PCB requires a 24VDC or 24VAV power supply and has a power consumption of up to 5W. Inputs IN1, IN2 and IN3 can be connected in parallel to the feed motors for the different feed types. The inputs operate on 12-24VDC/AC. The power supply and inputs have been galvanically isolated on the PCB. The L'port and T'port open automatically in the event of a power outage. If you do not have a 24V power supply available, order the Hanskamp PowerUnit 10A 24V DC, Item No.: 002-812-000. Connected the cable (Item No.: 001-100-000) attached to the L'port's coil to the PCB as illustrated in figure 30. Make sure that all cables are hidden away in the cable conduit and shield them at the top with a protection tube (not included).

Caution! Install the control cable out of reach of the cows.

30

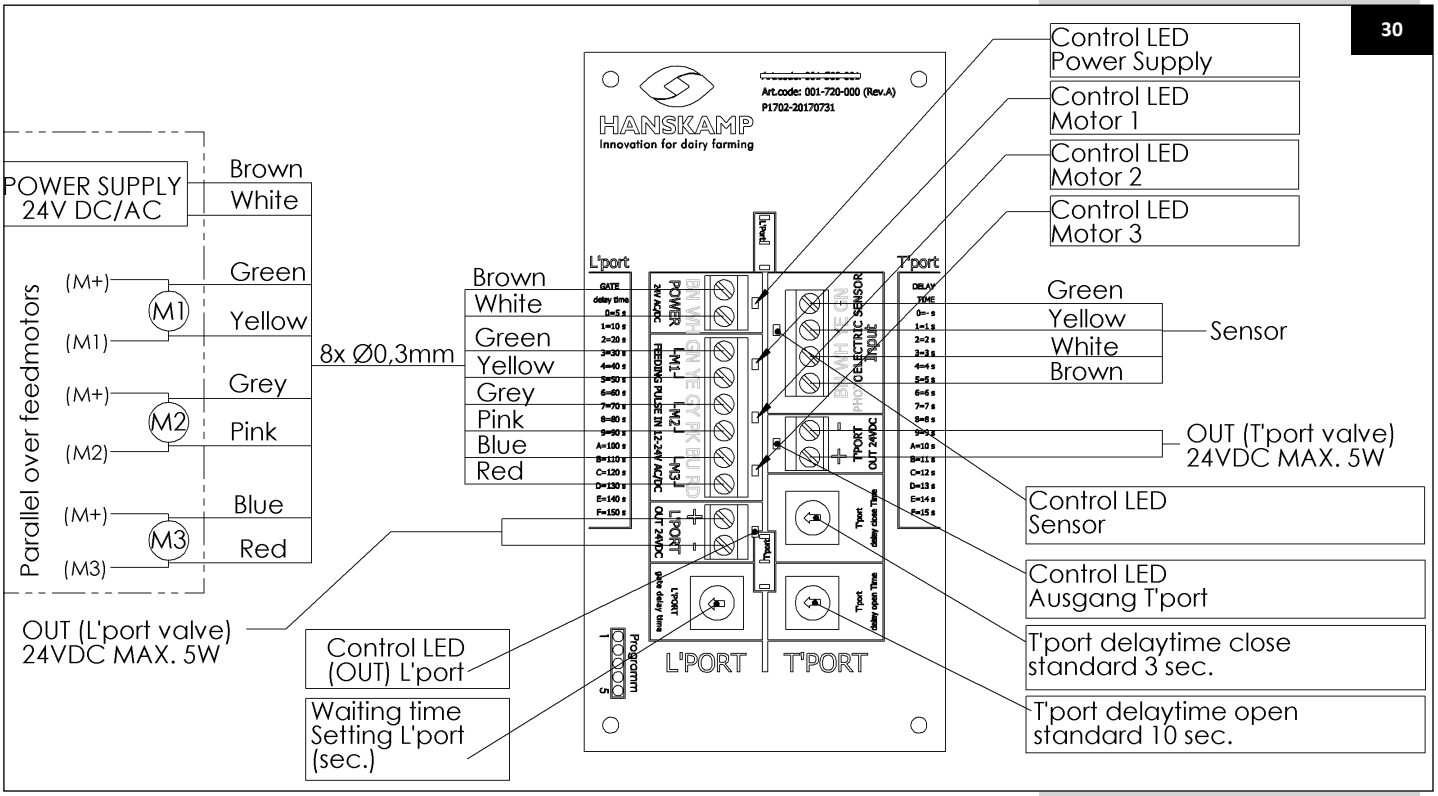

Air supply connection:

Connect the air supply to the Ø8 “air supply” air tube. Run the Ø8 air tube to the top through the cable conduit (Item No.: 004-334-000) and install a T-coupling on top (Item No.: 001-294-000). Connect the Ø8 L’port and Air supply (compressor) air tubes to this.

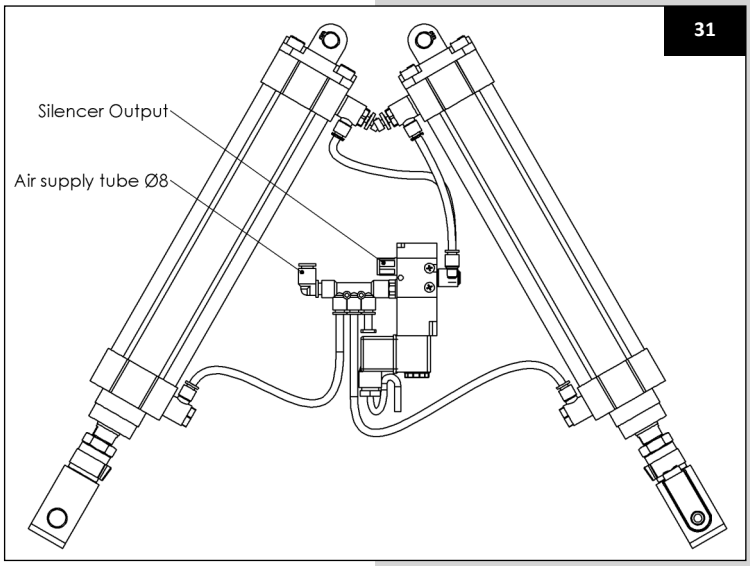

Air pressure recommendation: 6-8 bar. The supply hose can be up to 75 meters long. Visit www.hanskamp.nl/en for compressed air recommendations.

Caution! Install the air tube out of reach of the cows.

Caution! Only use properly conditioned air (clean and dry).

Caution! Make sure that there is no air pressure on the air tube when attaching the cylinder.

Operation:

The 3-positions switch (figure 32.b&c) can be used to choose between T’port/L’port open (Open), T’port/L’port closed (Close), or automatic (Auto). In automatic mode, the L’port closes as soon as a feed motor receives power. The T’port remains closed and will open when the sensor detects a cow with no feed credit, or after the delay time following the last feeding pulse. The L’port also opens after the delay time. The delay time can be set using the 14-position switch (time setting in seconds) (figure 30). The delay time must be longer than the total interval time of the feed types used. Recommended delay time: interval time + 25 seconds.

This means:

For the *Delaval, Fullwood, Insentec, Hokofarm, and Gascoigne Melotte* brands, the time should be set at 40 seconds (position 4).

For *Nedap VC* control: the total of the interval times of the feed types used + 25 seconds. In other words, 40 seconds for a single feed type (position 4), 60 seconds for two feed types (position 6)(rounded down), etc.

Set delay time T’port sensor

The cow-detection sensor on the T’port makes sure the T’port opens when animals without feed credit are inside the feedstation. Opening and closing the T’port happens after a certain delay time. These are adjusted by means of the “delay close time” and “delay open time” potentiometers. See figure 30, bottom right.

Adjustment advice:

Delay close time: 3 (= 3 sec)

Delay open time: 10 (= 10 sec)

Explanation switch delay time

0 = 05 sec.	A = 100 sec.
1 = 10 sec.	B = 110 sec.
2 = 20 sec.	C = 120 sec.
3 = 30 sec.	D = 130 sec.
4 = 40 sec.	E = 140 sec.
5 = 50 sec.	F = 150 sec.
6 = 60 sec.	
7 = 70 sec.	
8 = 80 sec.	
9 = 90 sec.	

Adjustment:

1. Using the adjusting mechanism on the fork (figure 32.c), adjust the length of the cylinder rod so that the cylinder continues to apply pressure on the anti-jump bar in the lowest position.
2. The adjusting mechanism labelled “Speed in” (figure 32. g&j) on the cylinder cover can be used to adjust the input speed on the cylinder. Make sure that the L’port moves from the lowest position to the top position in approximately 3 seconds.
3. The same applies to the adjusting mechanism labelled “Speed out” (figure 32.e), except the movement time should be approximately 5 seconds.
4. The adjusting mechanisms labelled “Cushioning” (figure 32.h) control the cylinder’s end position damping. Adjust using a 2.5mm hex wrench until the L’port closing gates closes smoothly.

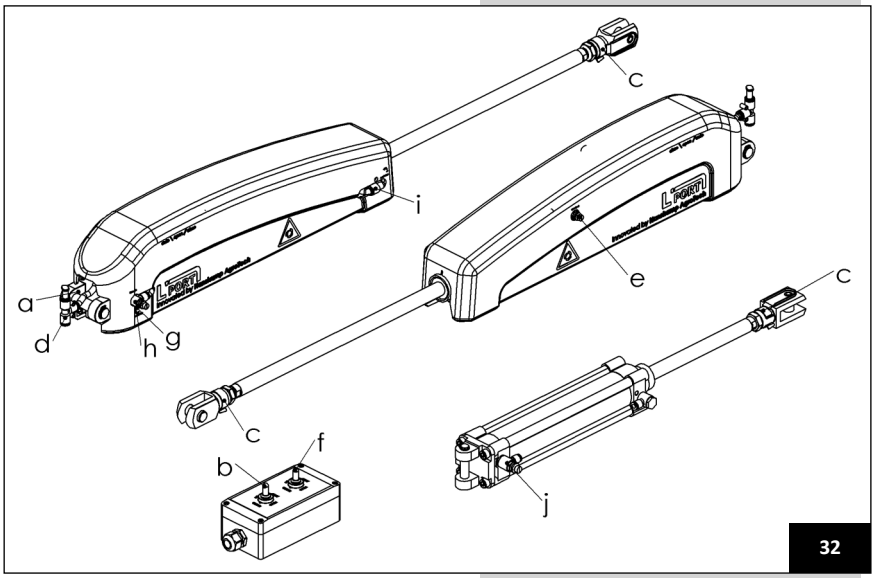

32

Caution! Failure to correctly execute the above adjustments can drastically shorten the L’port’s service life.

Danger! Check whether the air lines are properly connected and that they are not pinched before pressure is placed on the lines. In the event of incorrect connection, the output force of the cylinder can be increased, resulting in serious pinching hazard.

Start-up:

After installation: Leave the rear L’port closing gate open for one week by setting the switch (f) to “Open”, and leave the front gate closed for one week by setting the switch (b) to “Close”. This allows the cows to become accustomed to the new system. After the first week, the system can be put into operation by setting the switch (figure 32.b&f) to “Auto”. The noise level will never exceed 70 dB(A).

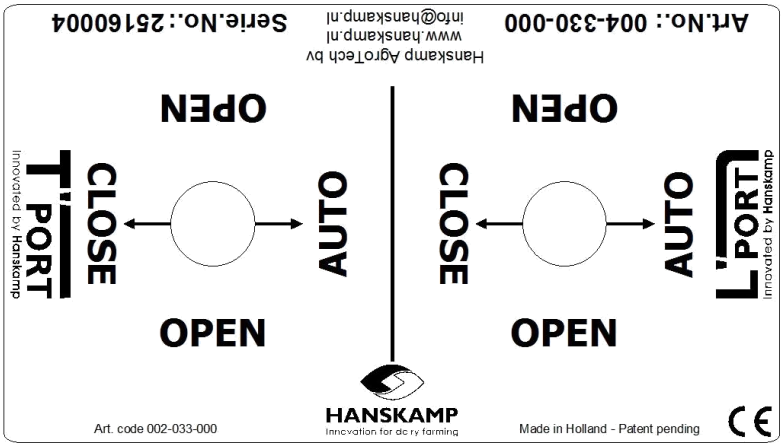

Warning:
Caution! Entrapment Risk.
Caution! L’port automatically starts.
Caution! Risk of impact by catching FeedStation.

Installation of PipeFeeders:

1. Place the PipeFeeders in the moon shape laser-etched into the top of the feed trough. This ensures that the PipeFeeder is perfectly straight.
2. Lock the PipeFeeders in place with the provided mounting bracket (Item No.: 004-314-000) and fasten it with 2 M8x20 bolts and 2 M8 washers (Item No.: 004-210-000 & 004-211-000) in the appropriate blind rivet nuts.

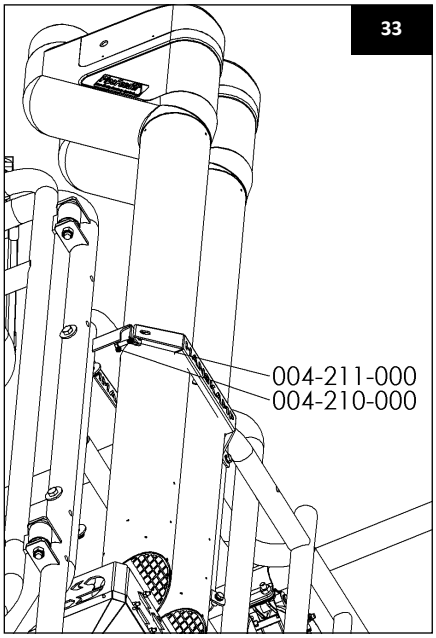

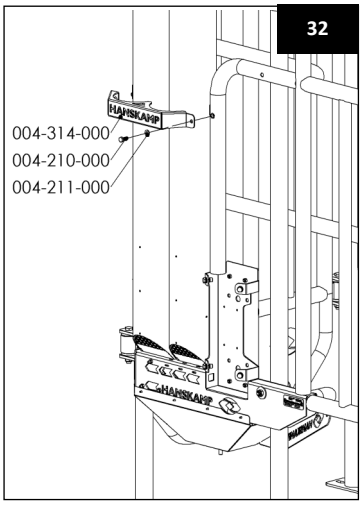

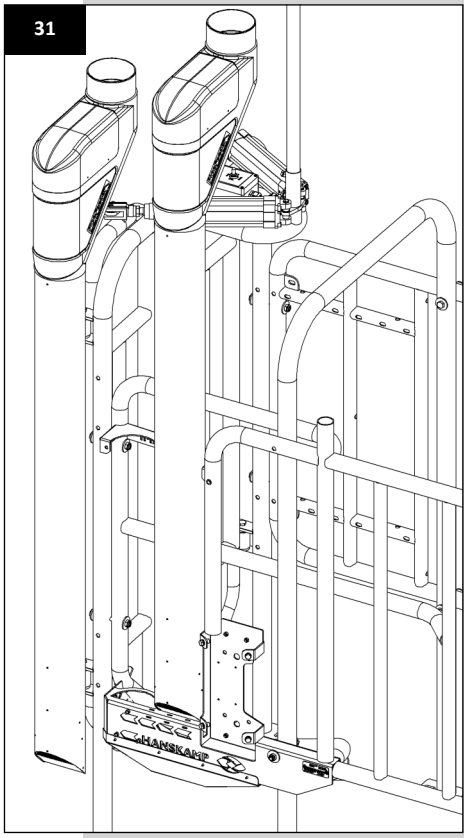

3. Mount the cable conduit (Item No.: 004-329-000) to the Side Fence including the feedtrough. (Item No.: 004-303-000) with the provided coupling clamp (Item No.: 011-086-000)(figure 26).
4. Run the PipeFeeder and T'port cables down through the cable conduit, fitting them through the U-shape into the PCB.

Caution! Make sure that the cables run straight to the cable conduit to keep them out of reach of cows.

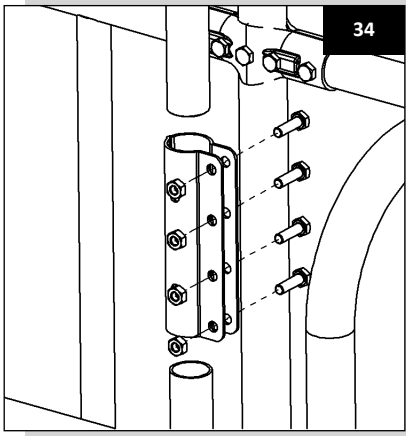

Important

Clean the feed trough regularly. Make sure that no feed residue gets left between the PipeFeeder and the feedtrough.
Make sure no water gets into the PipeFeeder. This can impair the operation.



Attach the appropriate electronics to the FeedStation. Connect the PipeFeeders. Holes have been pre-drilled in the feed trough mounting plate for various brands and types of transmitters, receivers and controllers.

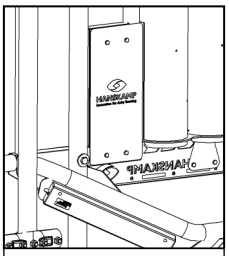

DeLaval reader cover plate art:nr:. 4315

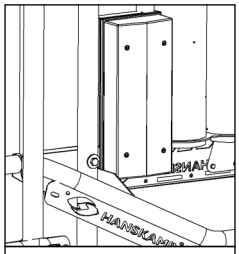

Nedap VC3/VC4

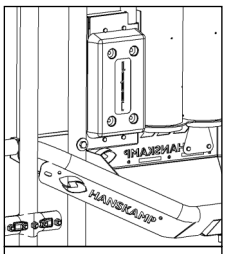

Velos/VC5

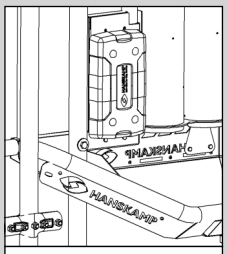

Hanskamp

Please note! Make sure that the PipeFeeders area aligned correctly so that they do not spill if a cow knocks against them. (See manual 001-847-000, PipeFeeder)
Please note! Always use cable conduit or protective pipe to protect the cables and wiring from external mechanical impacts.
Please note! Always make sure the cabling is hidden away, out of reach of the cow.
Please note! Make sure the electronics and FeedStation are earthed.
Please note! Calibrate the PipeFeeder feed dosator before use. Repeat this once a month or when changing feed type.

Connecting FeedStation walk-through

Multiple FeedStation's can easily be placed alongside each other. This only requires a single intervening fence. This saves a lot of parts.
The modular construction also allows for mirrored setups or three FeedStations alongside each other.

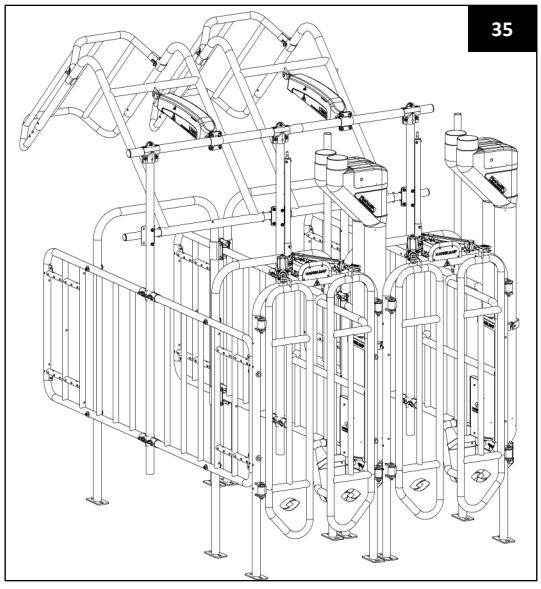

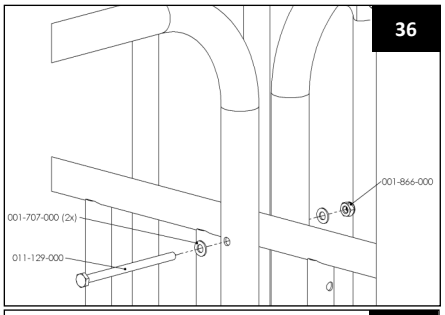

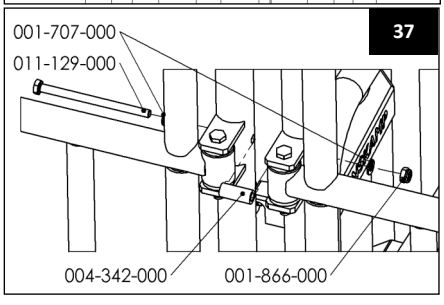

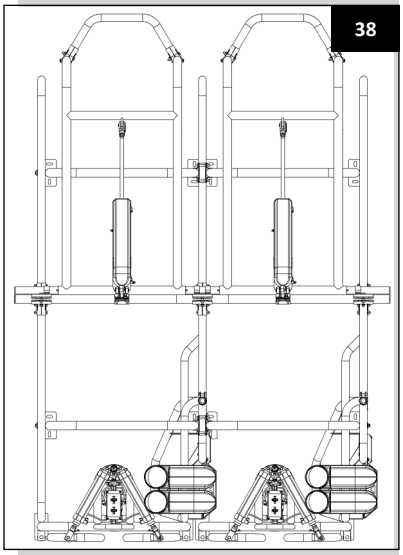

Caution!
Make sure that the person operating the T'port or L'port closing gate is always situated in a safe place.
Nobody should be allowed in the vicinity of the FeedStation when the T'port and L'port are in operation.
Do not climb on the fence when the T'port and L'port are in operation.

Maintenance
Check the FeedStation walk-through every day for faults, dirt, and wear. Do this by means of a test on the feed motors' outputs and according to the manual switches on the T'port. Make sure that noise and other vibrations caused by the operation of the L'port closing gate are reduced as much as possible (by installing a grease fitting for lubrication, for example).

Caution! Always switch off the air pressure and power supply to the FeedStation before performing maintenance or disassembly.

Disassembly:
Upon disassembly, all components must be sorted by material and included in the appropriate waste treatment cycle.

Overview of changes included in this installation and user instruction:

No.	Release date	Chapter	Comments
1	03-2015	All	First release (2x L'port)
2.0	08-2016	All	Update to T'port + L'port
2.1	10-2016	T'port	Protectionplate for photoelectric sensor T'port
2.2	11-2017	All	Right model Feedstation removed
2.3	03-2018	All	Added figures according to new PCB lay-out
2.4	01-2019	Sensor	standard setting (advice) from 5 to 10 sec

Warranty limitations:
The warranty does not cover costs and expenses resulting from:

- Incorrect use of equipment, not in accordance with the specifications in the installation and user instruction.
- The consequences of any intervention by mechanics other than mechanics recognised and approved by Hanskamp AgroTech for servicing, maintenance and other technical work.
- Incidents such as freezing, ice, fire, flooding, inundation or any other kind of extreme water damage, or lightning.
- Defects in the electrical system or grounding.
- Damage to the electrical system caused by vermin, etc.
- Incorrect use of compressed air which does not meet the compressed air regulations established by Hanskamp and its suppliers, causing a defect in the pneumatic systems. The compressed air regulations can be found at www.hanskamp.nl/en

The warranty is not applicable to consequential damage not related to the machine itself. All systems have been tested. However in the event of malfunctions, Hanskamp cannot be held liable for consequential damages.

Copyright and disclaimer
The information given in this publication is provided for information purposes only and does not constitute an offer for sale. The products supplied may differ from those illustrated. No parts of this publication may be reproduced or made public without prior permission in writing from Hanskamp AgroTech BV. Although this publication was put together with the utmost case, Hanskamp AgroTech is not liable for any damage that might arise due to errors or gaps in this publication. The instructions for installation and use in Dutch are the original instructions for installation and use. The translations into other languages have used the Dutch instruction for installation and use as the source document. Hanskamp AgroTech does not accept any liability for differences between the translations. If there are doubts about the content and accuracy of the translated instructions for installation and use, the Dutch instructions for installation and use constitute the authoritative document.
References to brand and/or products in this installation instruction instructions are solely for identification purpose. The company names and product names mentioned in the catalogue are tademarks of their respective owners.

FAQ

Common problem	Possible cause	Solution
Cow in the wrong direction in the FeedStation walk-through	-The collar of the cow is at the wrong place	Make sure the transponder is attached to one side of the cow, so the cow can be recognized at one side.
L'port / T'port closing gates		
Installation completed, gate doesn't open, the valve switch	Speed controllers are completely closed down.	Turn the flow-micro regulators open.
L'port make a squeaking noise at the hinge tube.	No fat / lubrication between hinge tube and moving element.	Install the grease nipple and lubricate the moving parts.
Cylinder goes shocking in or out	There could be a lateral force on the piston-rod	Take the fork off irrespective from the moving element.
		Place the clamp 004-045-000 again, so that the fork freely can be attached to the mounting element.
L'port doesn't close, there is no light burning/ serveral lights are burning.	Signal cable is incorrectly connected.	Review or signal cable is properly connected
	No Power to PCB.	Check the connection and power supply.
	Not the correct power has been supplied.	Check that the PCB is connected to 24V AC or DC. (at 12 volts the gate will not work)
	Waiting time is incorrect set.	Connect new cable and remove the old one.
Gate goes right after the feed portion open again.	Waiting time is incorrect set.	Set Waiting time properly.
PipeFeeder		
There is no feed.	No feed in stock pipe.	Check auger and silo
	Motor is not controlled by the controller. Take of the cover at the motor and check the indicator lights on the PCB.	Check supply and control (voltage)(see manual ControlUnit. Provided when it is used as a control.)
	Check if the rotor spins. Connection piece between the motor and drivesshaft could be broken.	Remove the motor of rotor and reinsert.
	Constipation by, for example wood or plastic.	Remove the PipeFeeder off the wall and shake it empty. The rotor can be rotated by hand when it is empty.
PipeFeeder isn't anti spill.	PipeFeeder isn't set.	For DC, see page. 10, step 7 off the PipeFeeder manual.
PipeFeeder doesn't distribute the proper amount.	Calibration is incorrect.	Calibrate the controller.

Annex 1

Dimensions:

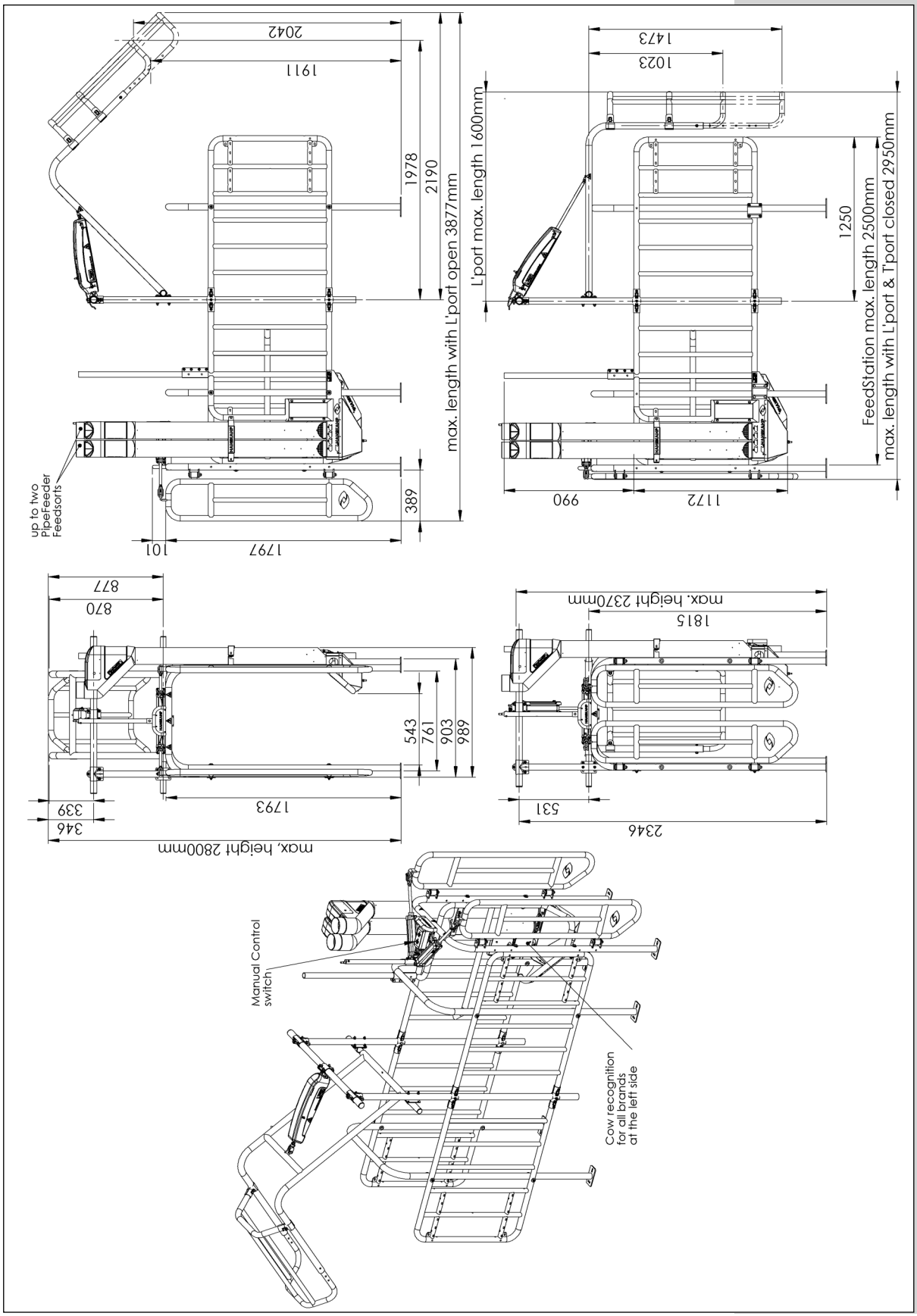

Annex 2 Loose components

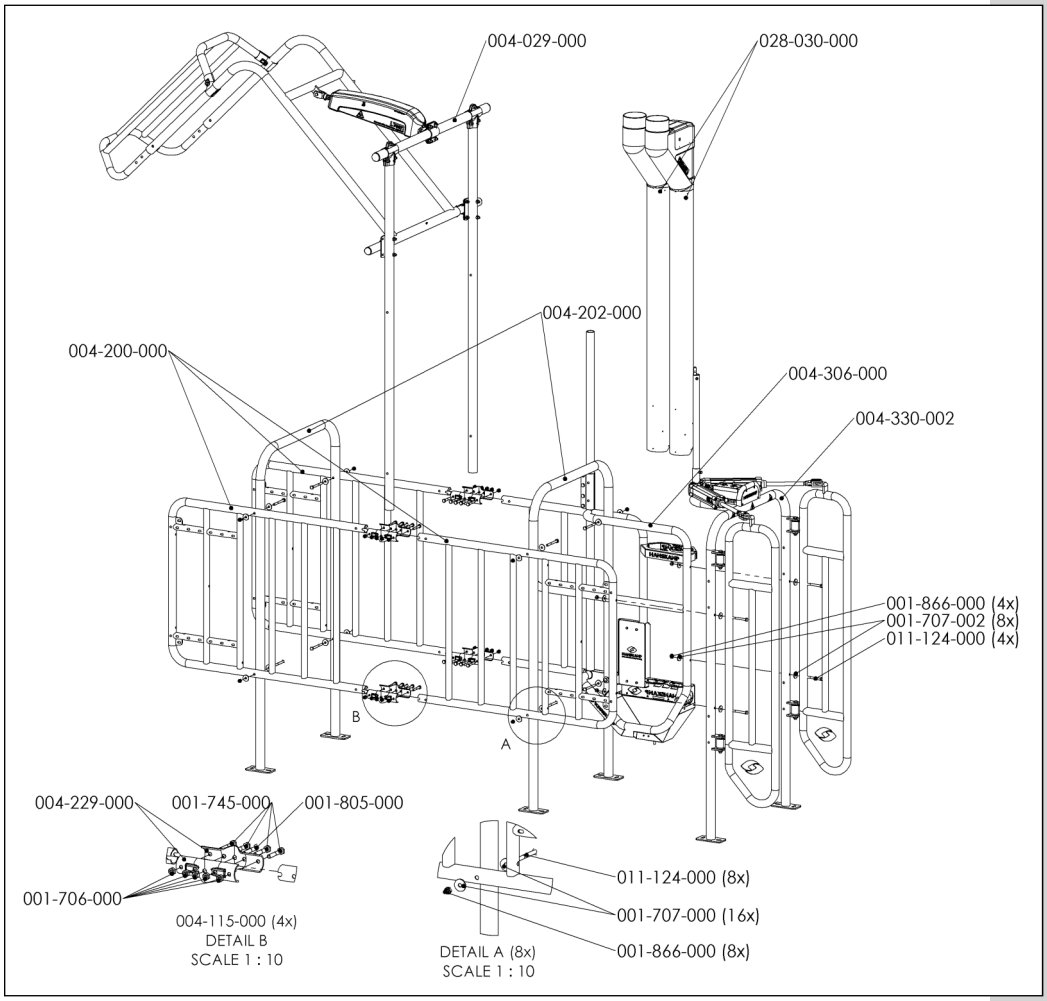

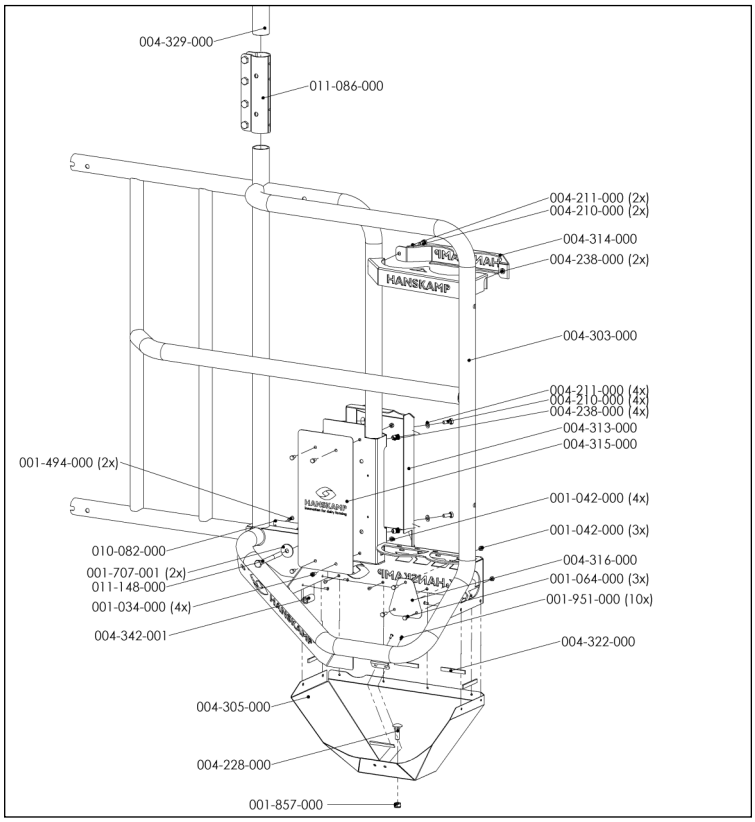

Annex 3 Description of the components in anex 2:
FeedStation walk-through

Article number	Description	Qty,
028-030-000	PipeFeeder low capacity	1
004-029-000	L'port closing gate universal	1
004-200-000	Side Fence FS	3
004-115-000	Double T-clamp 1½"x1¼" galvanized	4
004-202-000	Frame FS	2
004-306-000	Side fence FS-WT incl, feedtrough left	1
004-330-002	T'port (front)	1

004-321-000 Set mounting materials FS-WT

Article number	Description	Qty,
001-707-000	Washer M10 DIN125 8.8 ev	16
001-707-002	Washer M10 DIN440 8.8ev	8
001-866-000	Self locking nut M10 DIN 985 8.8ev	12
011-124-000	Tap bolt M10x105 DIN931 8.8 ev	12

Parts 004-306-000 feedtrough FS-WT Left

Article number	description	Qty.
001-707-000	Washer M10x34x3	1
001-866-000	Self locking nut M10 a2	1
004-238-000	Blind rivet nut M8 1,5-4,5mm 8.8 ev	6
004-303-000	Side fence FS-WT incl. feedtrough left	1
004-313-000	Shield plate for FS-WT left	1
004-314-000	PipeFeeder mounting bracket for FS-WT left	1
004-315-000	Cover plate for FS-WT	1
004-316-000	Hose guard for MD on FS-WT	1
004-322-000	PE-material 200 mtr. FS-WT	0,05
004-329-000	Cable guide tube 1¼ (Ø42,4x2,6mm) l=900	1
011-086-000	Connection clamp, heavy duty	1
011-148-000	Tap bolt M10x110	1

Annex 4 L'port

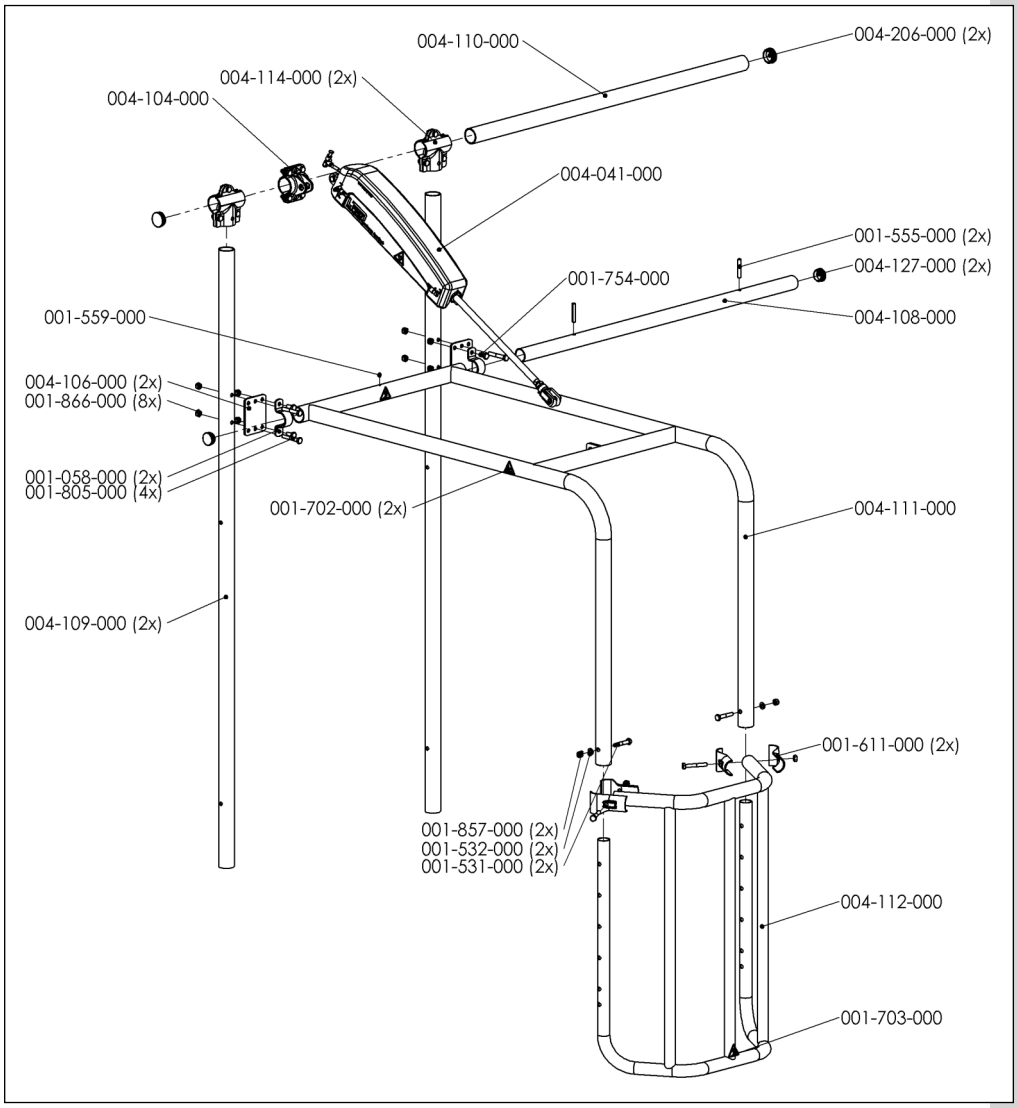

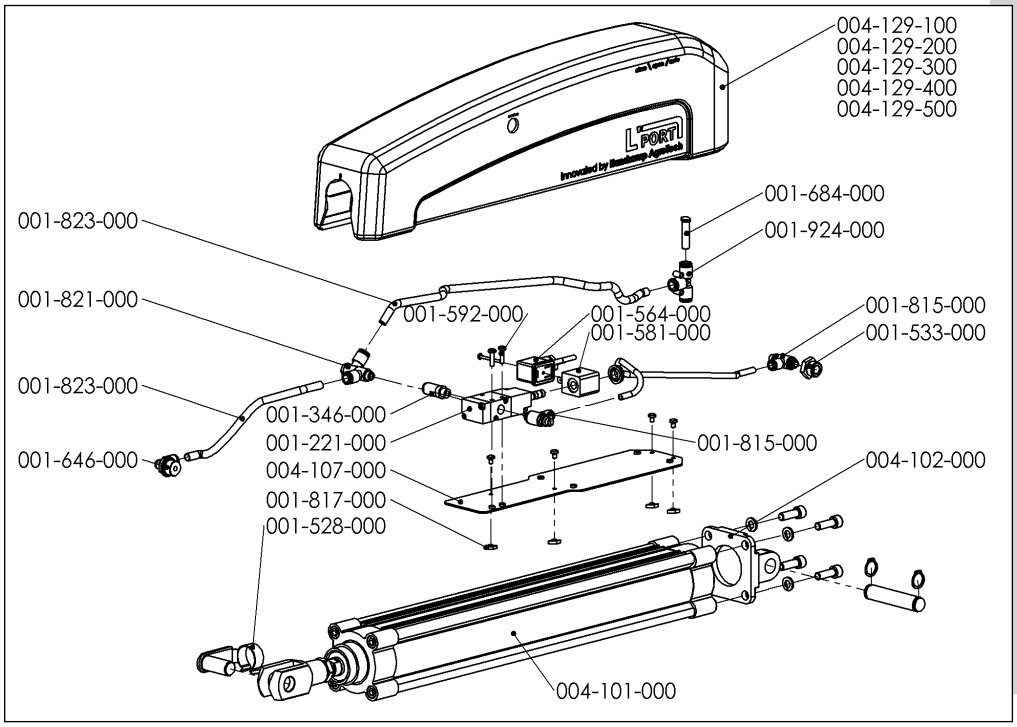

Annex 5 Description of the components L'port

004-029-000 Components L'port closing gate without control

Article number	Description	Qty,
004-108-000	Hinge tube LP 1¼"x 2,6 L=1190mm	1
004-109-000	Standing Legtube LP 1½" x 3,25 L=1976mm	2
004-110-000	Support tube cylinder LP 1½" x2,9 L=1190mm	1
004-111-000	Movable component LP	1
004-112-000	Extension LP universal	1

004-052-000 component box L'port universal without control

Article number	description	Qty,
001-058-000	Tube Clamp 1¼ hot-dip galvanized	2
001-100-000	cable LiYY 2x0,5mm 2,75 mtr	1
001-531-000	Bolts M10x60 DIN 931 A2	2
001-532-000	Washer M10 A2 DIN 125/1A	2
001-555-000	Spring pin 10x60 Heavy type DIN1481 A2	2
001-559-000	Lubricating nipple M6x1 DIN71412 ev	1
001-582-000	Connector for coil	1
001-611-000	T-clamp with bolts 1½"x 1¼"M10x70	2
001-702-000	Sticker Warning hand entrapment	2
001-703-000	Sticker Warning risk of impact	1
001-754-000	Bolt M10x20mm DIN 933 8.8ev	4
001-755-000	Sticker start automatisch	2
001-805-000	Bolt M10x70 DIN931 8.8 ev	4
001-822-000	Metalscrew M4x25 DIN 7982 A2	2
001-857-000	Self locking nut M10 A2 DIN 985 coat GL	2
001-866-000	Self locking nut M10 DIN 985 8.8 ev	8
001-957-000	Bolcilinderkopschroef M4x8 DIN7985	4
001-977-000	TAPTITE 2000 M4x6 Torx T20 SFS Intec	4
004-041-000	Cylinder set L'port complete	1
004-045-000	4-hole-halfscale complete galvanized	1
004-106-000	Tube assembly plate	2
004-107-000	Assembly plate cylinder	1
004-114-000	3-hole T-clamp 1½"x1½" galvanized	2
004-127-000	Round insert 1¼"(Ø42,4) darkgrey	2

Article number	Description	Qty,
004-129-100	Cylinder cover LP Black without controlunit	1
004-129-200	Cylinder cover LP green without controlunit	1
004-129-300	Cylinder cover LP blue without controlunit	1
004-129-400	Cylinder cover LP red without controlunit	1
004-129-500	Cylinder cover LP orange without controlunit	1

Annex 6 T'port

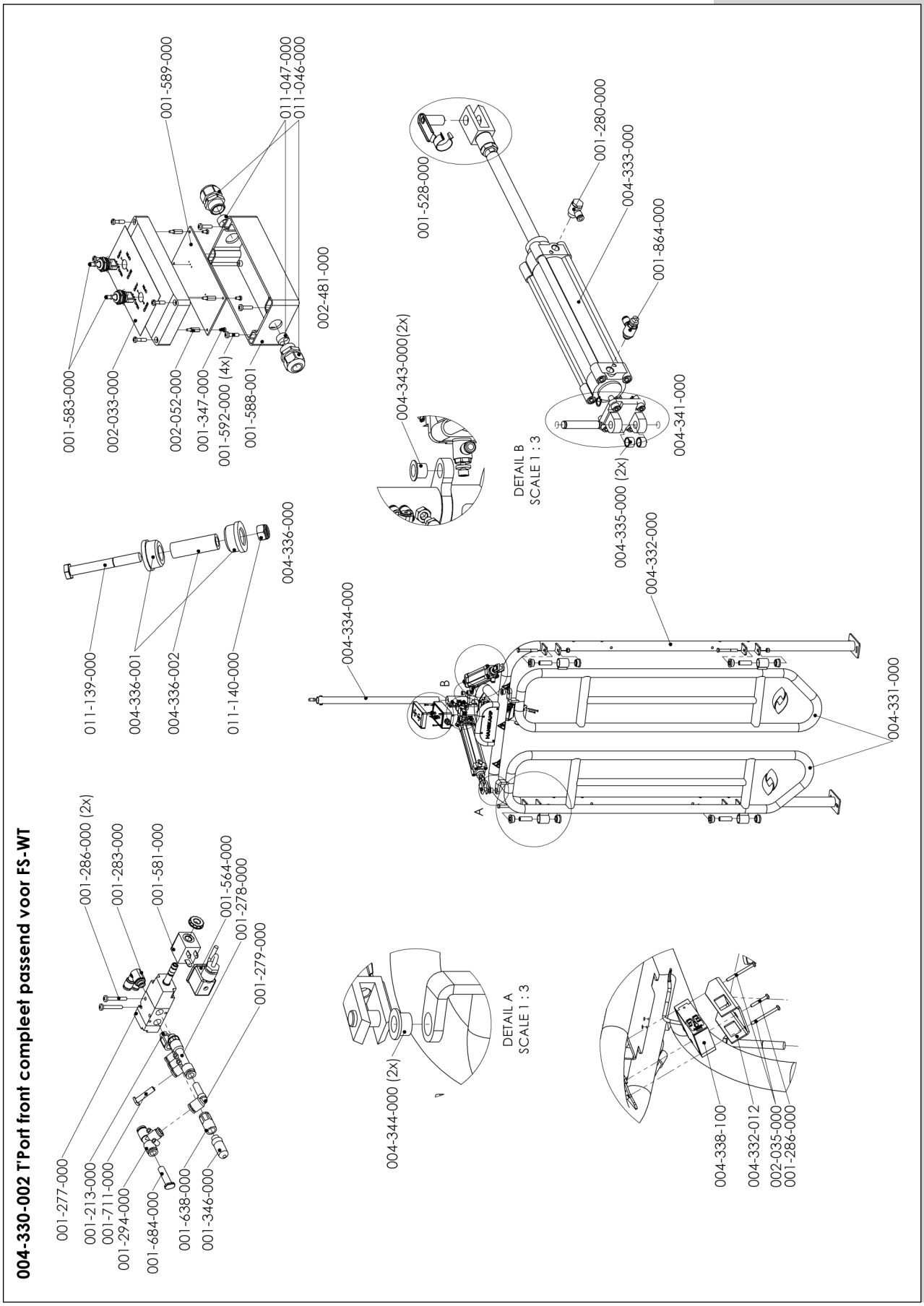

Annex 7 Description components T'port

004-330-002 T'port Front (FS-WT)

Article number	description	Qty,
002-481-000	Control unit T'port with double cable gland, 2x 3-way switch	1
004-331-000	T'port Fence complete	2
004-332-000	Frame T'port complete	1
004-334-000	Tube for cable 1"(33,7x2,6) L=600	1
004-336-000	Plain bearings set incl. M12 bolt and nut	4
004-337-000	Cylinder ClosingGate Ø63 400 XN	1
004-338-000	Photoelectric sensor 24V AC/DC with delay 24V AC/DC	1
004-332-012	Protectionplate for photoelectric sensor T'port	1

Article number	decription	Qty,
001-213-000	Push-in fitting 1/8"x8mm	1
001-277-000	Valve 3/2 1/8" without coil	1
001-278-000	Multiple manifold threaded inlet RL45 Ø8x1 Ø6x3 G1/8	1
001-279-000	L-connector with push-in sleeve RL46 Ø8-Ø8	1
001-280-000	Single rotary ring push-in RL54 Ø6 1/4	2
001-283-000	Double rotary ring push-in Plastic RL25 Ø6 1/8"	1
001-294-000	T-piece R22 8mm entry	1
001-346-000	Silencer 1/8"	1
001-388-000	Luchtslang 6x3,9 PU waterbestending /50mtr.	0,031
001-528-000	Fork GK M63	2
001-564-000	DIN43650 plug black 2 wire 0.5mm2 0.16	1
001-581-000	Coil for valve.	1
001-638-000	Push-in fitting 1/8 bi x 8mm	1
001-684-000	Plug Ø8	1
001-711-000	Plug, RL9T Ø6	1
001-823-000	Tube 8x5 5 PU/PE. /50m	0,036
001-864-000	Flow-micro regulator type C 6-1/8"	2
004-333-000	Cylinder ClosingGate Ø63 400 XN	2
004-341-000	Rear hinge cylinder Ø50	1

004-340-000 Mounting set for T'port (FS-WT)

Article number	Description	Qty,
001-286-000	Screw M4x30 DIN7985 ev 8.8	3
001-702-000	Sticker Warning hand entrapment	2
001-592-000	Screw M4x16 a2	4
004-242-000	Blind rivet nut M4 0.3-3.0 mm 8.8 ev	9
004-335-000	Nylon space 12x16x10	4
004-343-000	Slide bearing for cylinder T'port rear hinge	2
004-344-000	Slide bearing for cylinder T'port	2
010-260-000	Warning sticker starts automatically T'port	2
011-141-000	Hexagon head setscrew M8x12 DIN933 8.8 ev	2

004-336-000 Plain bearings set incl. M12 bolt and nut

Article number	Description	Qty,
004-336-001	Bearing sleeve fitting into tube Ø42,4	2
004-336-002	Spacer Ø20x13mm 61mm long ev.	1
011-139-000	Bolt M12x95 DIN 931 8.8 ev	1
011-140-000	Self locking nut M12 DIN985 8.8ev	1

Hanskamp AgroTech B.V.
Broekstraat 17
7009 ZB Doetinchem
Netherlands
Tel: +31 (0)314 - 393 797
Fax: +31 (0)314 - 393 826
www.hanskamp.nl/en

Please also visit:

