FeedStation Mobile

046-000-000

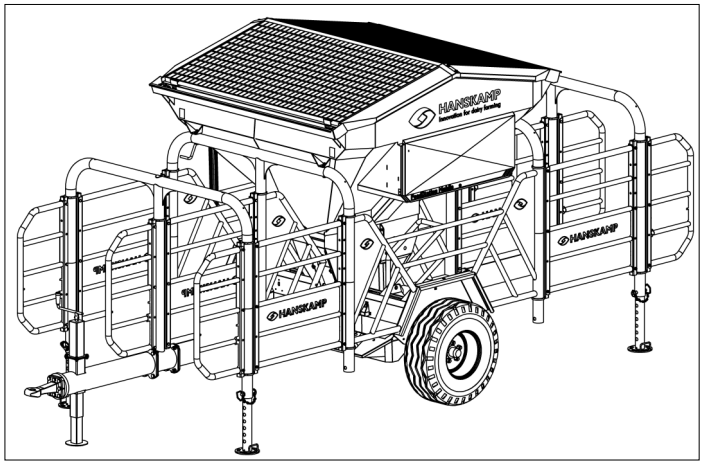

Mobiel voerstation
Mobile out of parlour feeder
Mobiles Futterstation
Station de DAC Mobile

Installation and Operating Instructions **EN**

HANSKAMP
Innovation for dairy farming

Article number: 010-411-000

Date: December 2025
Version 1.2 - Translation of Original Installation and Operating Instructions
According to Annex 1 Chapter 1.7.4 of the Machinery Directive 2006/42/EC

Doetinchem,
The Netherlands
www.hanskamp.com

Foreword

Contents of the Installation and Operating Instructions

This manual contains the necessary information to correctly install and operate the FeedStation Mobile. Please study this information carefully and ensure you fully understand it before configuring the FeedStation Mobile. Failure to do so may result in damage to the equipment. Contact Hanskamp if any information is unclear to you or if you require further information.

All information in this manual has been compiled with care. Hanskamp cannot be held liable for errors or omissions in this manual. The recommendations are intended as guidelines. All instructions, illustrations and specifications in this manual are based on the latest information available at the time of publication. Your FeedStation Mobile may include improvements, features or options not covered in this manual.

Applicability

The table below shows the type numbers of the FeedStation Mobile to which this manual applies.

Model designation

Model	Type number
FeedStation Mobile 2 feeding places	046-02*-000
FeedStation Mobile 4 feeding places	046-04*-000

Contact details of milking technology dealer

We recommend that you write down the name, telephone number and e-mail address of your milking technology dealer in the table below. This ensures that you can easily find the correct contact details when needed.

Name	
Address	
Phone number	
E-mail	

1. Introduction

The FeedStation Mobile enables individual and automated dispensing of concentrate feed to cows during grazing. This sustainable and mobile system is designed to improve the health and welfare of cows, while simultaneously reducing feed costs and optimising milk and meat production. The FeedStation Mobile can also be used in the stable by simply connecting the system to the power outlet. This allows the mobile out of parlour feeder to be used all year round, both indoors and outdoors.

The Hanskamp FeedStation Mobile consists of a silo, two or four feeding places, and can be equipped with one or two feed types, plus a MultiDos.

The information in this manual is intended for dairy farmers and technicians.

- Dairy farmers use the information to test and adjust the FeedStation Mobile.
- Technicians use the information to install and configure the FeedStation Mobile.

2. Safety

2.1 Introduction

The 'Safety Warning' symbol indicates important safety messages on the FeedStation Mobile. Pay attention when you see this symbol: there is a risk of personal injury or death. Follow the instructions in the safety warning(s).



Safety Warning Symbol

2.2 Warning Terms

Note the use of the warnings signs **CAUTION** and **DANGER** with the safety messages. The following guidelines apply to the warning messages:



Caution! Indicates a potentially hazardous situation which, if not avoided, could result in minor personal injury or damage to equipment or the surrounding area.



Danger! Indicates a potentially hazardous situation which, if not avoided, could result in death or serious injury.

2.3 Safety Instructions

You are responsible for the safe operation and maintenance of your FeedStation Mobile. You must ensure that you, and anyone else who operates, maintains or works in the vicinity of the FeedStation Mobile, are familiar with all safety information in this manual.

You are the key to safety. Good safety precautions protect you and those around you. Use these precautions as part of your safety programme. Make sure that everyone who operates, maintains or works in the vicinity of the FeedStation Mobile is familiar with these safety precautions. Do not risk injury or death by ignoring safety precautions.

- FeedStation Mobile owners must train users before the mobile out of parlour feeder is put into operation. This training should be repeated at least once per year.
- The user must read, understand, and follow all safety and operating instructions in the manual.
- A person who has not read and understood all safety and operating instructions is not permitted to operate the FeedStation Mobile.
- Do not modify the equipment. Unauthorised modifications may affect the operation and reduce the service life of the equipment and/or result in personal injury.
- Only use original spare parts and ensure they are installed by authorized technicians.

2.3.1 General Safety

- Make sure you have read and understood the manual and safety instructions before connecting the power supply to operate or adjust the FeedStation Mobile, or before disconnecting it for maintenance.
- Only trained personnel are permitted to operate the FeedStation Mobile.
- Install all guards and safety devices before operating the FeedStation Mobile.
- Always wear appropriate protective clothing and personal protective equipment (PPE) during installation, operation, and maintenance.
- Before cleaning or servicing the FeedStation Mobile, turn off the electrical power to the FeedStation Mobile and isolate the power supply.
- Make sure that the phone numbers of emergency medical care services available in your area are at hand.
- Contact your milking technology dealer if you have further questions.
- Review all safety-related topics regularly (at least annually) with all users.

2.3.2 Electrical Safety

- Only a qualified electrician is permitted to install the power supply for the FeedStation Mobile.
- Check whether the electrical earthing of the electrical system and all components of the FeedStation Mobile is in accordance with local regulations and standards.
- Replace electrical conduits, cable sheaths, switches and components immediately if they are damaged.
- Isolate the electrical power supply before opening the cover and working on the electrical system.

2.3.3 Installation Safety

- Make sure you have read and understood the instructions in this manual.
- Check that the FeedStation Mobile has been correctly installed as described in the manual.

2.3.4 Safe Operation

- Make sure you have read and understood the manual and safety instructions before connecting the power supply to operate or adjust the FeedStation Mobile, or before disconnecting it for maintenance.
- Only trained personnel are permitted to operate the FeedStation Mobile.
- Before cleaning or performing maintenance on the FeedStation Mobile, turn off the electrical power to the FeedStation Mobile. Install the cover and other safety devices before operating the FeedStation Mobile.
- Keep hands, feet, hair and clothing away from live parts.
- Keep all unauthorised persons, especially young children, away from the FeedStation Mobile at all times.
- Before applying power to the FeedStation Mobile, ensure that all components are securely fastened and that all cables and fittings are in good condition.
- Contact your milking technology dealer if you have further questions.

2.3.5 Maintenance Safety

- Make sure you have read and understood the manual and safety instructions before connecting the power supply to operate or adjust the FeedStation Mobile, or before disconnecting it for maintenance.
- Only trained personnel are permitted to maintain the FeedStation Mobile.
- Before cleaning or performing maintenance on the FeedStation Mobile, turn off the electrical power supply to the FeedStation Mobile.
- Wear protective clothing and safety glasses when working on the electrical system.
- Ensure that all guards and safety devices are reinstalled once maintenance work is complete.

2.3.6 Safety Messages

- This chapter on safety messages contains general safety messages. Specific safety warnings are included in the relevant sections of this manual, where potential hazards may occur if procedures or instructions are not followed.

3. Installation and Operating Instructions

General Description
The Hanskamp FeedStation Mobile is a universal and modular mobile out of parlour feeder that has been developed to provide cows individually with their portion of concentrated feed. The FeedStation Mobile is equipped with auger units and can be expanded to a maximum of two feed types (one auger equals one feed type). Additionally, the FeedStation Mobile can be equipped with a MultiDos system.

These installation instructions will guide you through the installation of the FeedStation Mobile. Always read this manual thoroughly and follow the safety instructions. Examples of assembly can be found at www.hanskamp.com. For order numbers and the names of certain parts, please refer to the appendix.

Transport and Storage
The FeedStation Mobile will be transported on a pallet (fig. 2.2). This pallet is fully sealed, and the corners are taped to prevent damage. The storage of the FeedStation Mobile will also be done in this way.

Caution! Always move the pallet using a suitable means of transport (forklift, pallet fork, pump truck, etc.).

Caution! When unpacking the pallet, parts may fall off the pallet.

The pallet contains **1**

1x FeedStation Mobile with 2 or 4 feeding places, all incl.
1x Drawbar incl. towing eye and support leg
1x Intermediate tube under fencing**
1x Towbar
1x 004-601-002 Bag with mounting material**

** variable per version

Loading instructions **2**

- Minimum net weight of loading equipment (forklift, loader, shovel) 3.5 tons.
- Use long forks (minimum 2 metres). See figure 2.2.

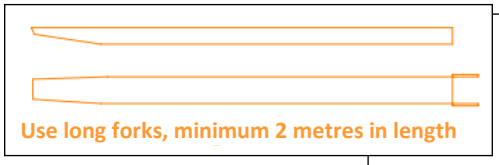

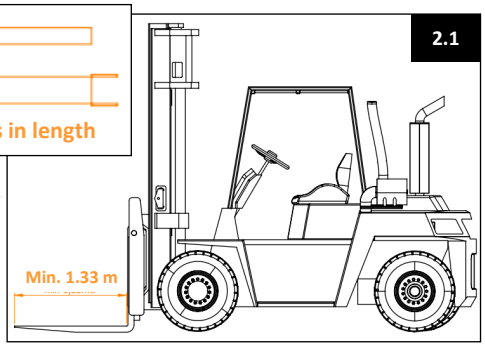

Type designation; can be found on the silo

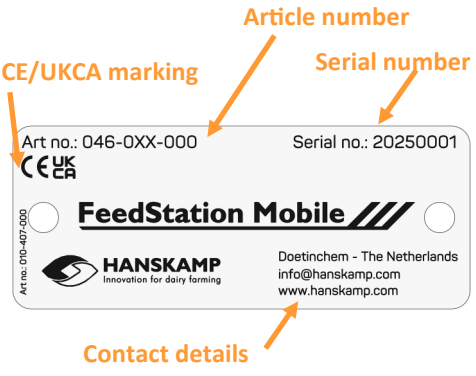

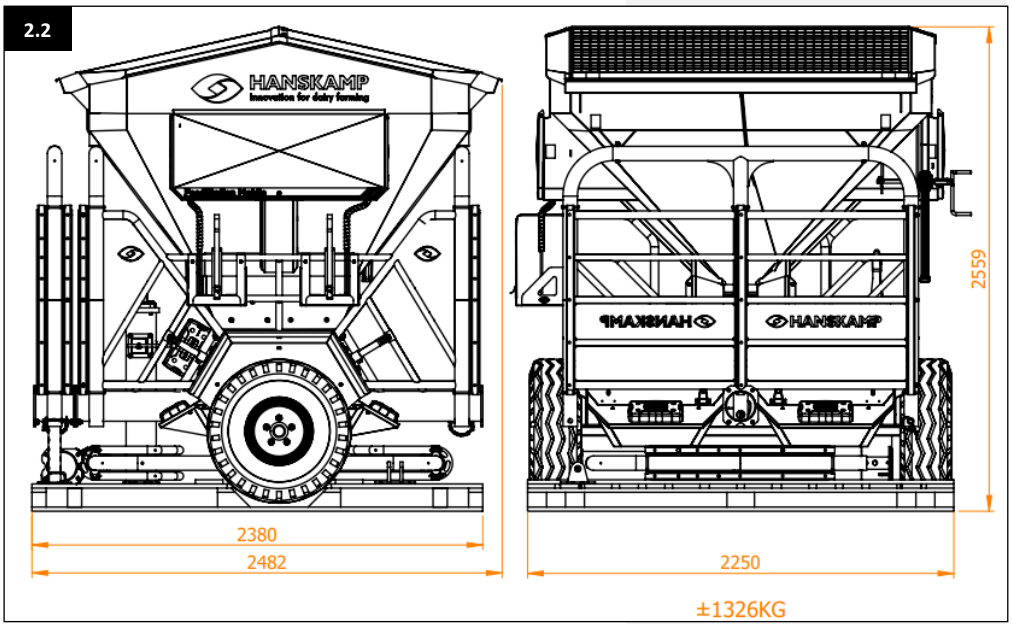

Safety Stickers

The user and installer are responsible for the safe operation and maintenance of the FeedStation Mobile. To ensure safety around the FeedStation Mobile, safety stickers are used. Further on in these installation and operating instructions you can see which sticker should be placed where (e.g. fig. 3).

Applying the Stickers

- Make sure the surface on which the sticker is to be applied is dry and clean.
- Make sure the surface temperature is at least 5 °C.
- Find the right position for the sticker.
- Remove a small portion of the foil on the back.
- Place the sticker on the surface and press a small section of the adhesive layer onto it.
- Carefully remove the foil and apply the remainder of the sticker.
- Remove any air bubbles with a needle and use the foil to smooth out the sticker.

Sticker Maintenance

- Keep safety stickers clean and legible. Clean them using soap and water. Do not use solvents or abrasive products that could damage the safety stickers.
- Replace any missing or unreadable safety stickers.

Safety stickers are available from Hanskamp. Always use the article numbers when corresponding.

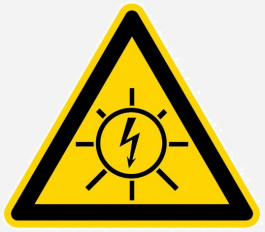

010-405-005 Warning sticker
Solar power



010-405-003 Warning sticker
Charging battery



010-405-004 Warning sticker
Arc flash



010-405-006 Prohibition sticker
Do not extinguish with water



010-405-007 Warning sticker
Read manual before use





Assembly

1. Check the parts list to ensure all components are present.

2. Remove the centre tube (**art. no. 004-600-004**) (fig. 6) from the pallet and place it next to the wheel so it is out of the way.

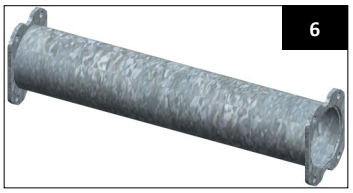
6

3. Next, disassemble the fences of the double anti-jump bracket (fig. 7). Place the fences on the side of the mobile out of parlour feeder. **Attention! Keep the bolts and nuts for later use.**

4. Now disassemble the double anti-jump bracket from the mobile out of parlour feeder and place it approximately 1 metre in front of it (fig. 8). **Again, keep the bolts and nuts for the next step.**

Caution! The double anti-jump bracket may tip over during disassembly. Lay it down on the ground immediately after removing the bolts and nuts.

5. Now attach the centre tube to the frame (out of parlour feeder side 1 & 2) using 4x M16x45 bolts and M16 self-locking nuts (these were loosened in the previous step) (fig. 9).

Caution! If point-to-point Wi-Fi is being used (fig. 31), do not forget to route the coiled Cat5e cable through to the front.



5

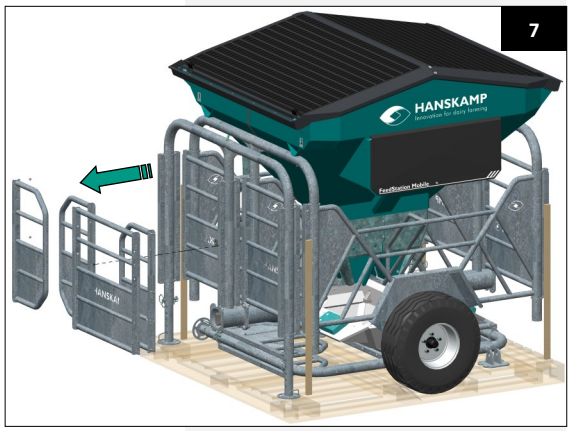

7

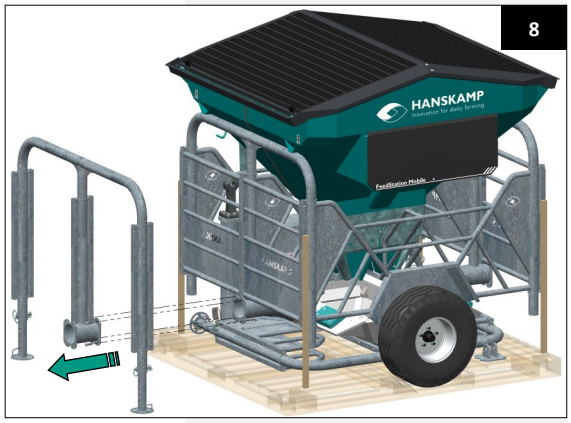

8

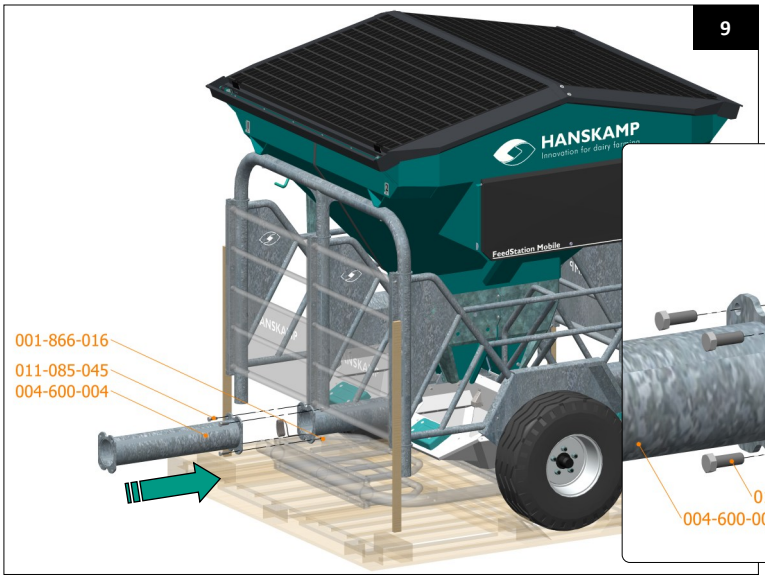

9

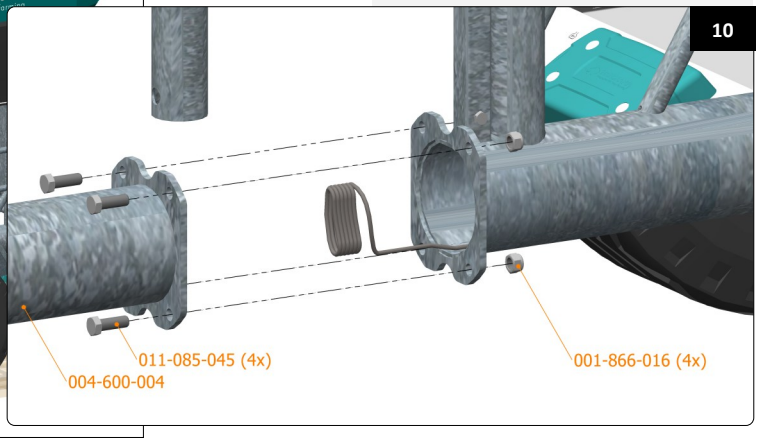

10

6. Position the double anti-jump bracket in front of the previously mounted lower tube. Secure it with 4x bolt M16x45 and lock nuts M16. Place the support legs on the ground and lock them (fig. 11).

7. Now remove the wooden reinforcement at the front so that the side fences can be dismantled.

8. Disassemble the 2 side fences that have been released and reinstall them rotated 90 degrees. Use the M10x60 bolts and M10 lock nuts that were just removed. Each gate requires 6 bolts and nuts (fig. 13). Additional bolts and nuts can be found in the bag of mounting materials (**art. no. 004-601-002**).

11

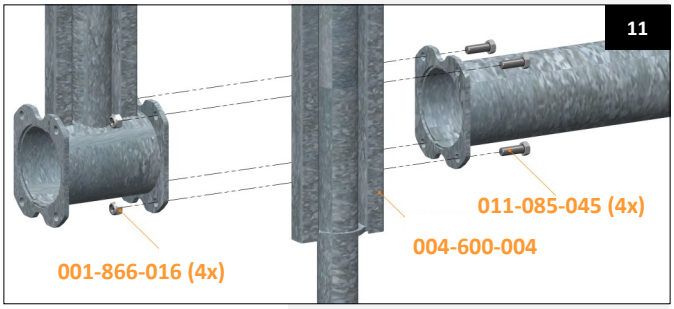

12

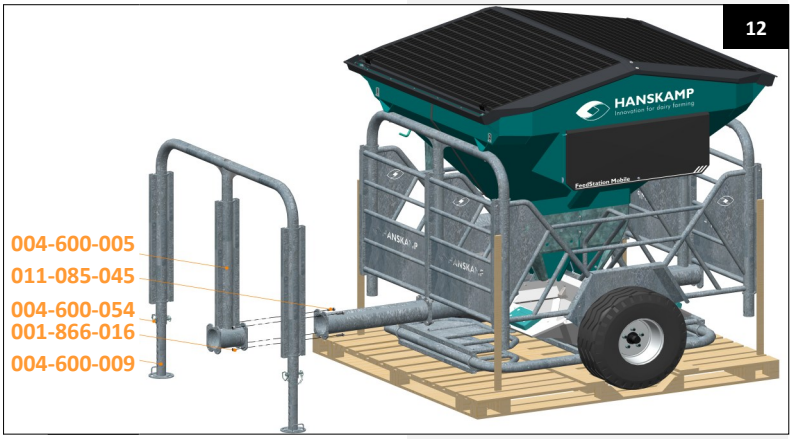

13



9. Mount the drawbar using M16x45 bolts and M16 locking nuts (fig. 14).

Caution! If point-to-point Wi-Fi is used (fig. 31), route the Cat5e cable upward through the centre tube of the double anti-jump bracket before mounting the drawbar.

14



10. Now attach the hinged gates to the double anti-jump bracket (fig. 15).

11. Slide in the support legs (with holes) and remove the wooden planks at the rear. Then drive the FeedStation Mobile forward off the pallet using a tractor or other suitable vehicle.

If the FeedStation Mobile has 4 feeding places, a double anti-jump bracket including fences will now be exposed. Mount the double anti-jump bracket including fences according to steps 5 to 10 and 12 on the other side.

15

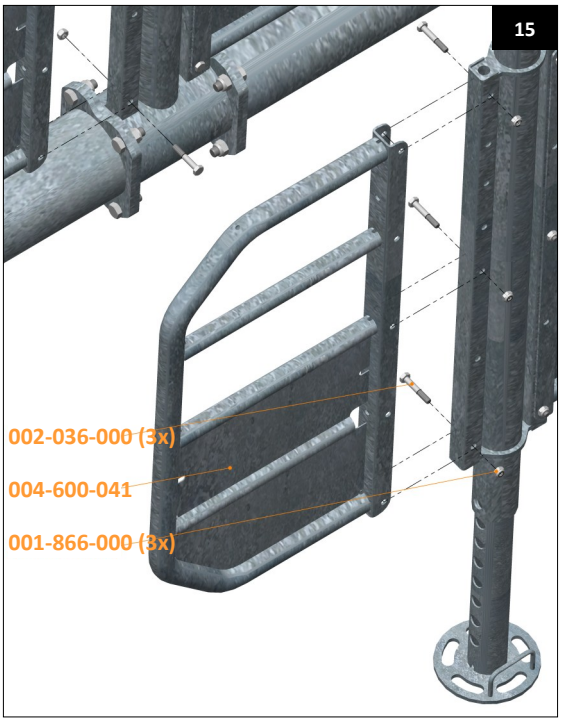

16

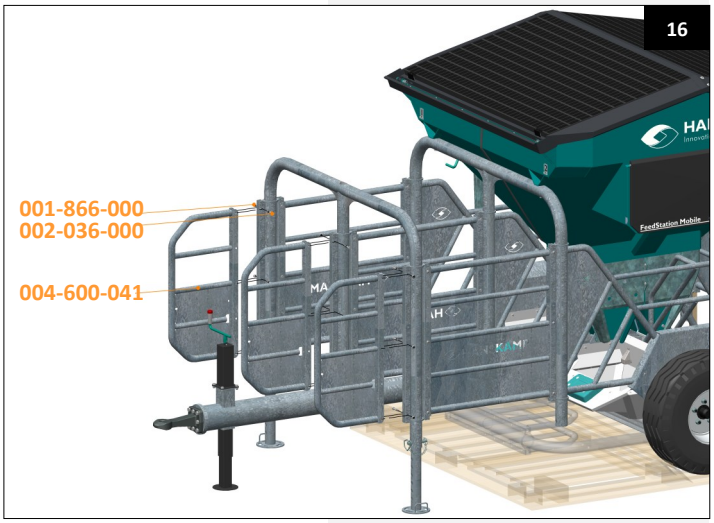

12. Next, mount the towing eye using M16x45 bolts and M16 self-locking nuts.
Note: A pin is not included (fig. 17).





13. Check whether the correct plate is installed inside the silo, depending on the selected configuration.

Caution! Fully open the flaps (each fitted with a solar panel) so that they move past the dead centre. Otherwise, they may slam shut forcefully.



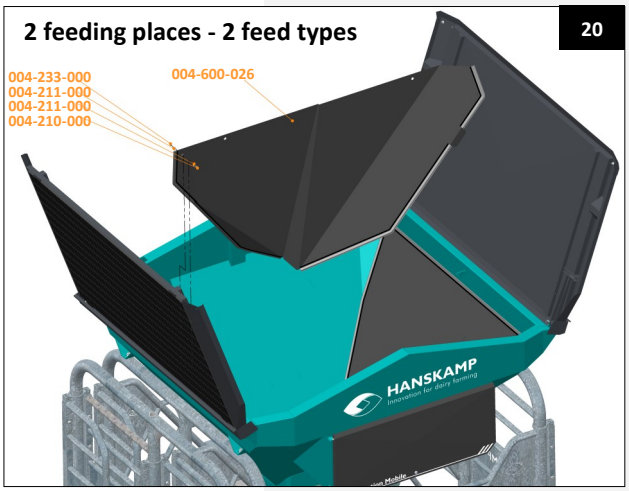

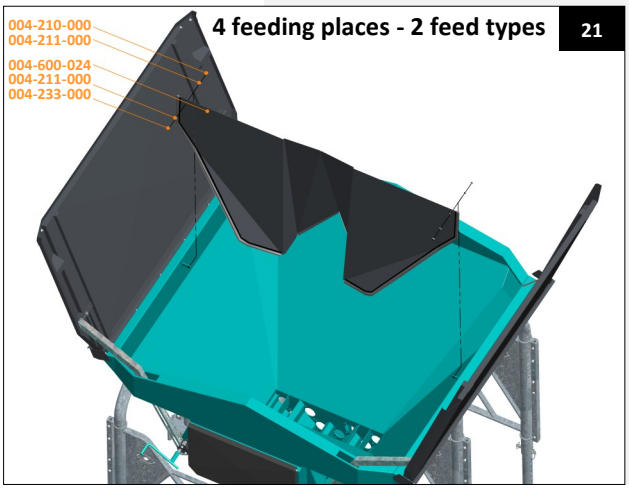

* Fig. 19 - Station with 2 feeding places and **1 feed type**.
* Fig. 20 - Station with 2 feeding places and **2 feed types**.
* Fig. 21 - Station with 4 feeding places and **2 feed types**.
* No additional plate is required for a mobile out of parlour feeder with 4 feeding places and **1 feed type**.

Commissioning

14. Check that the auger units are mounted correctly and that the drop-out trays are adjusted correctly (with the opening facing upwards).

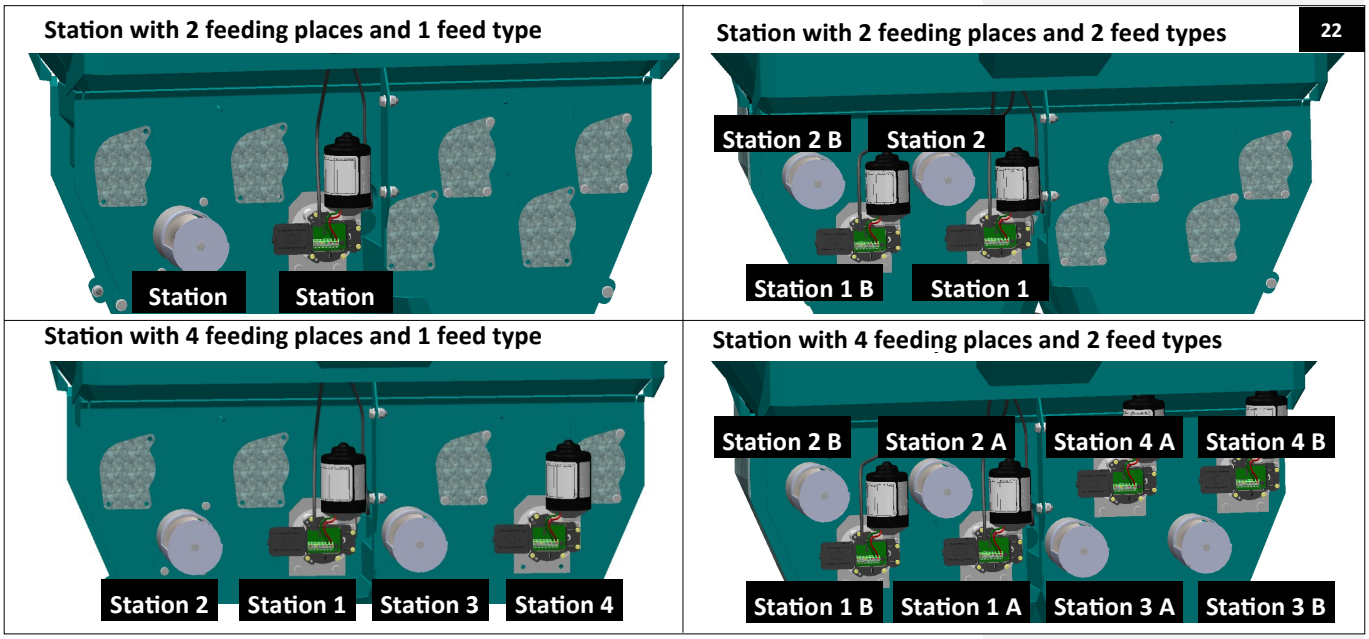

15. Check that the installation is connected correctly and check for damage before switching on the power. The installation can be found behind the cover with safety stickers.

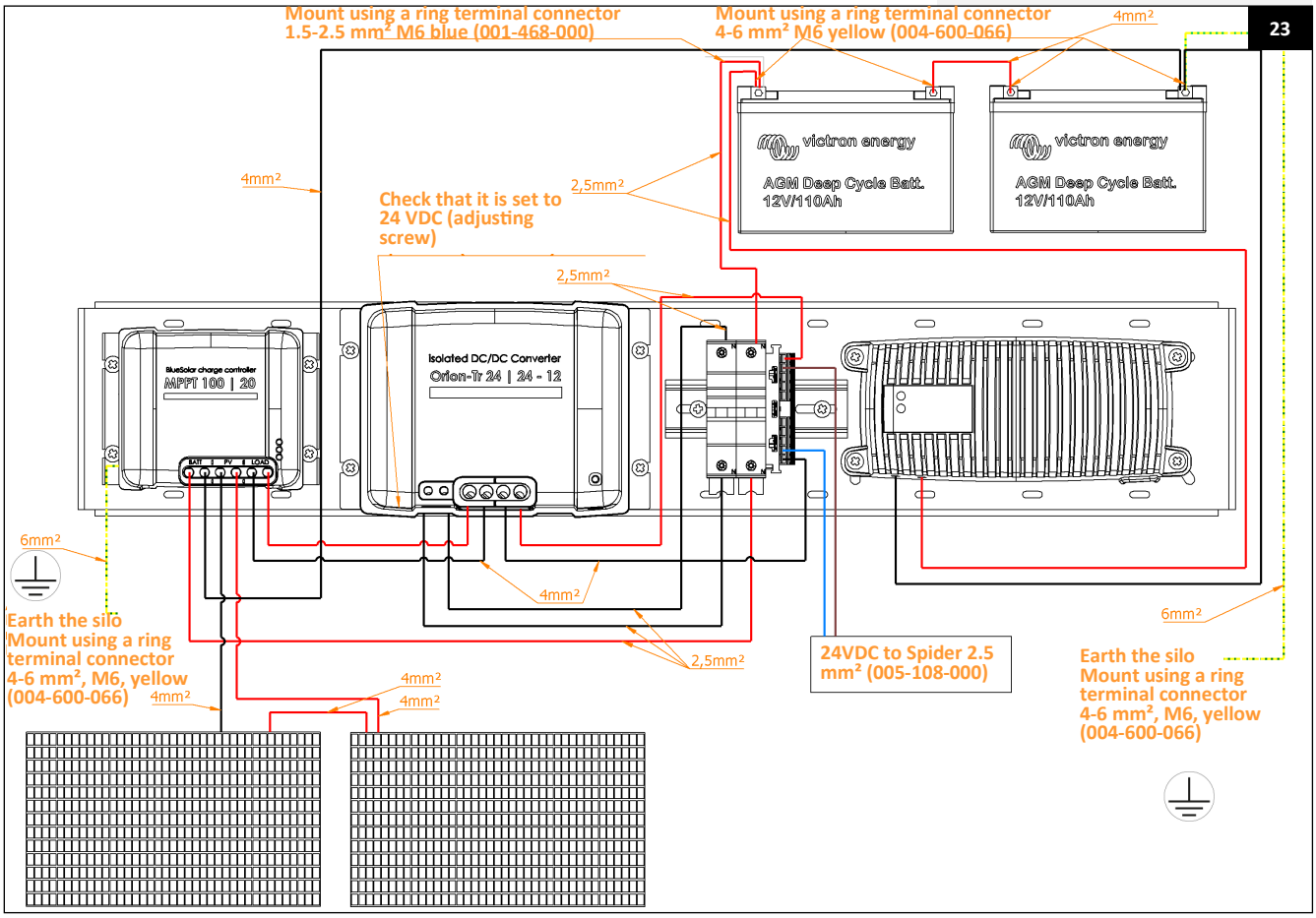

16. Then connect to Spider to configure the FeedStation Mobile. Follow the Spider manual for detailed instructions.

17. Fill the FeedStation Mobile with the desired concentrate feed to calibrate the feed dispensers and start the system.

Caution! Open the lids of the FeedStation Mobile completely so that they do not fall shut (fig. 24).

24

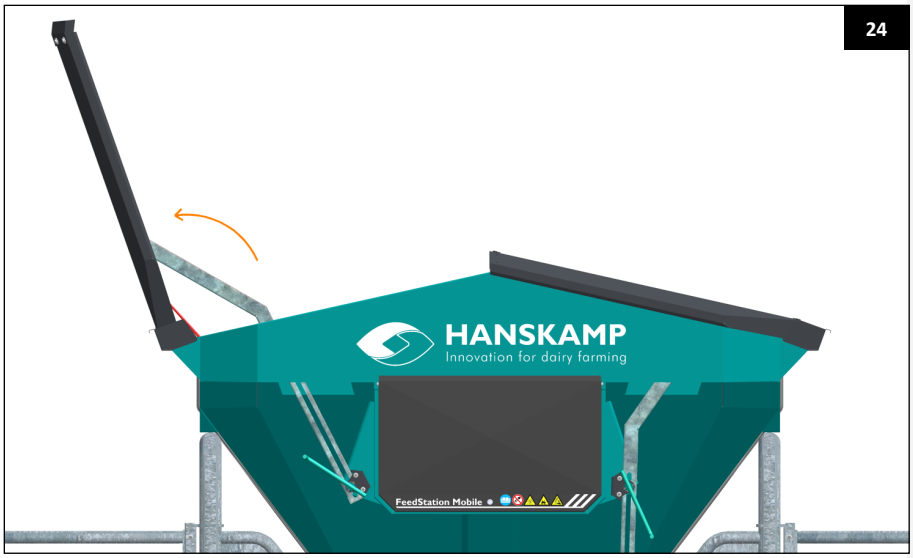

Attention! After opening the lid, insert the locking pin into the first available hole above the turning mechanism (fig. 25).

25



Scan to go to the download page. Here you will find the manual of Spider.

Caution! When closing the lids, make sure that the lid with the cam is closed last (fig. 26).



Attention! After closing the lids, insert the locking pin into the first available hole below the turning mechanism (fig. 27).



Important! Make sure that the person operating the FeedStation Mobile is always positioned in a safe location. While the FeedStation Mobile is in operation, no persons should be near the station, and climbing on the fencing is strictly prohibited.

Maintenance
Check the FeedStation Mobile daily for malfunctions, dirt and wear. Do this by means of a test on the outputs of the feed motors. Ensure that additional noise and other vibrations caused by the operation of the auger unit are reduced as much as possible.

Disassembly
When disassembling, all parts must be separated by material type and included in the designated waste processing cycle.

Caution! Always switch off the electrical power of the mobile out of parlour feeder first during maintenance and disassembly.

Overview of changes included in these installation and operating instructions

No.	Release date	Chapter(s)	Comments
1.0	05/2025	All	First release
1.1	08/2025	Commissioning	DC/DC converter added to the wiring diagram. Images added showing locking pin placement after opening and closing the lids.
1.2	12/2025	Page 26	Change of Address Hanskamp

Warranty limitations
Costs and expenses resulting from the following are excluded from the warranty:

- Incorrect use of equipment, not in accordance with the specifications in the installation and operating instructions;
- The consequences of any intervention by mechanics other than mechanics who have approval from Hanskamp to perform certain actions;
- Incidents such as freezing, ice, fire, flooding, inundation or any other form of extreme water damage, and lightning;
- Defect of the electrical system or the earthing;
- Damage to the electrical system due to vermin and the like.

The warranty does not apply to consequential damage that does not relate to the machine itself. All systems have been tested. However, in the event of malfunctions, Hanskamp cannot be held responsible for consequential damage.

Copyright and Disclaimer
The information in this publication is intended for informational purposes only and does not constitute a sales offer. The products shown may differ from the illustrations. References to brands and/or products in this manual are provided solely for identification purposes. The company and product names mentioned in this manual are trademarks of their respective owners. No part of this publication may be reproduced or made public without the prior written permission of Hanskamp AgroTech BV. Although this publication has been compiled with the greatest possible care, Hanskamp AgroTech BV accepts no liability for any damage that may arise from errors or omissions in this publication. The Dutch-language installation and operating instructions are the original version. Translations into other languages are based on the Dutch installation and operating instructions. Hanskamp AgroTech BV accepts no liability for discrepancies between translations. In case of any doubts about the content or accuracy of the translated installation and operating instructions, the Dutch version shall be regarded as the authoritative document.

Additional Options

MultiDos

MultiDos can easily be added to the FeedStation Mobile. For this, set **art. no. 004-600-100** is available. This set includes 2 MultiDos pumps with nozzle, hoses and a jerrycan holder (fig. 28 & 29).

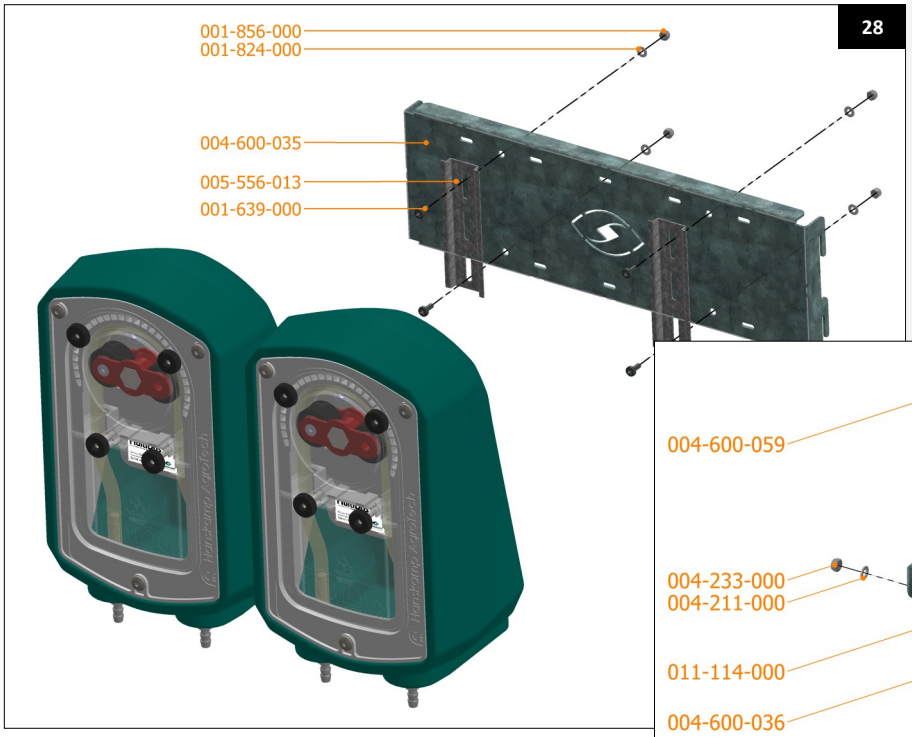

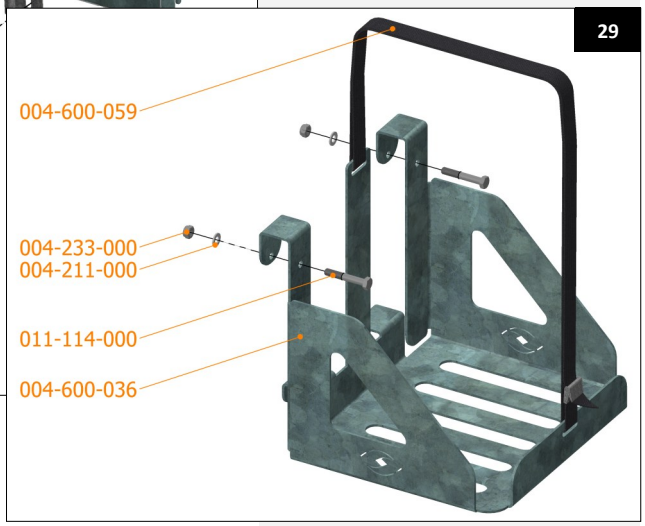

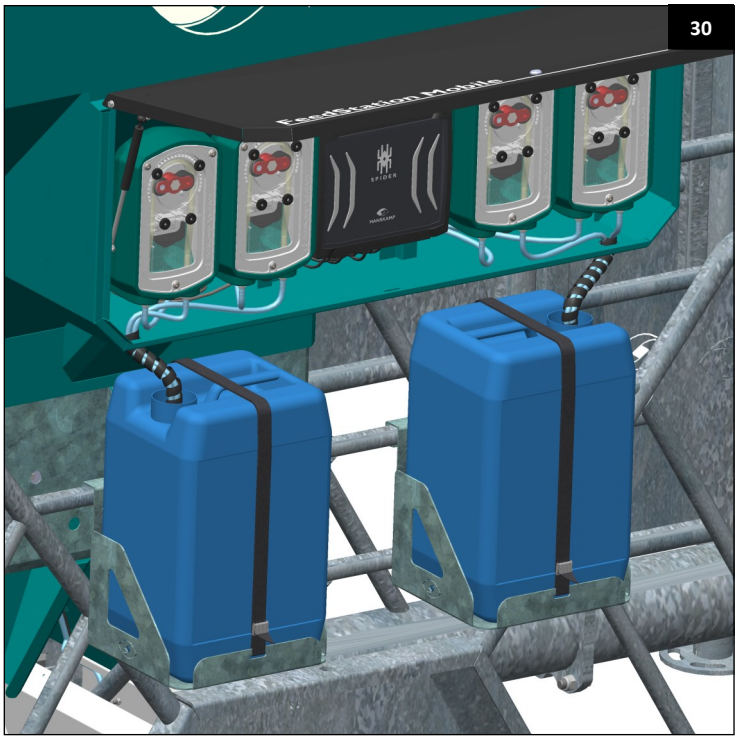

Point to Point Wi-Fi

Use this set to create a stable network connection between your SpiderServer and SpiderClient, or multiple SpiderClients. For installation on Spider, refer to Service information **010-391-000**, Service Information **005-140-000** and **005-140-100**.

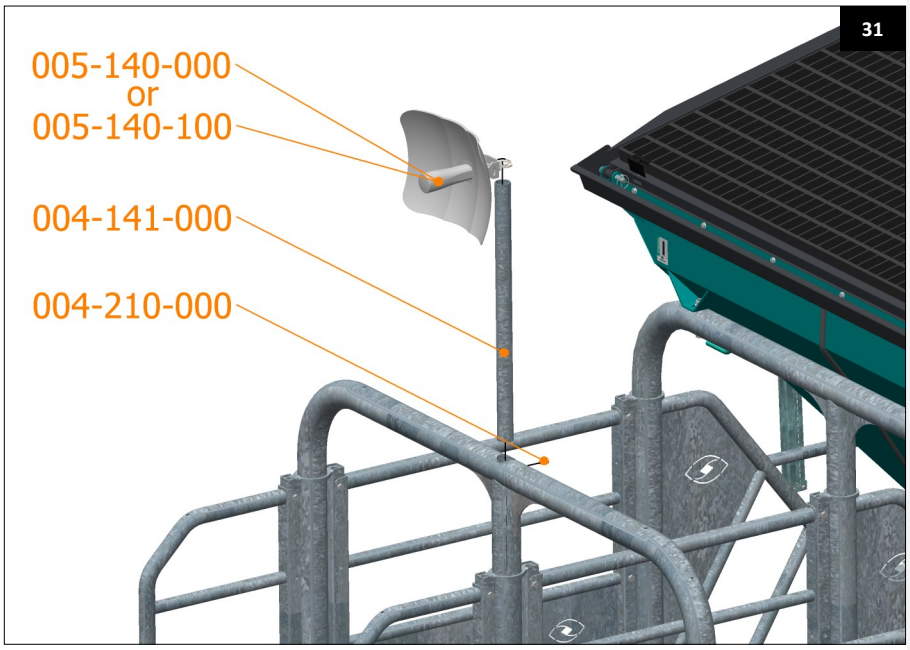

002-514-000 Feed auger with 100 gram auger
002-517-000 Feed auger with 50 gram auger

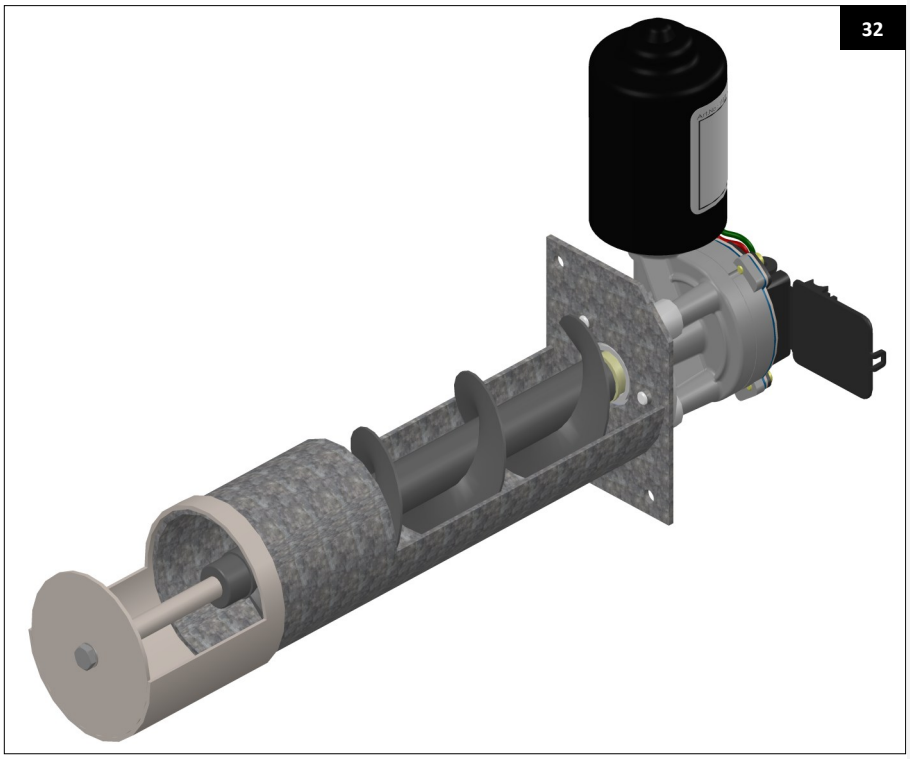

Declaration of incorporation of complete machines IIA

According to Annex IIA of the Machinery Directive 2006/42/EC, for completed machines

We,
Hanskamp AgroTech BV
Broekstraat 17
7009 ZB Doetinchem
The Netherlands,

Authorised compiler(s) of the technical file:

H.J. Hanskamp,

declare under our sole responsibility that the following product:

046-000-000 FeedStation Mobile
Mobile out of parlour feeder from Hanskamp AgroTech BV,

to which this declaration relates, complies with the provisions of the following directive(s):

- Machinery Directive 2006/42/EC

The product also complies with the provisions of the following standards:

- NEN-EN-ISO 12100
- NEN-EN-IEC 60204-1
- NEN-EN-IEC 13849-1

If the FeedStation Mobile is not connected and the prescribed safety instructions are not used, this Declaration of Conformity is not applicable and no rights can be derived from this declaration.

Doetinchem, the Netherlands, 8-04-2025 H.J. Hanskamp



FAQ

Common problem	Possible cause	Solution
No solar panel yield	Panels damaged	Replace panels
	Cable break	Replace cable
	Main power switch is off	Switch on the main power switch
Auger unit does not dose	No feed supply	Refill feed supply
	Cow has no feed allowance	Check set feed allowance and intake
	Motor fault	Check whether motor is running/slow. Make sure it runs smoothly
	Feed blockage in silo	Remove blockage, possibly use other feed that flows more easily
No power	Battery empty or not connected to power grid	Charge or replace the battery. Connect to power supply
Water in stock	Roof does not close properly, or gutter is blocked	Close roof properly or empty the gutter
Water in the feed trough	Holes in feed trough blocked	Clear the holes in the feed trough to allow water to drain out

Technical specifications

Specification	
Container capacity	± 2230 litres -> ± 1340 kg
Max. speed 	25km/h (or as permitted in the country concerned). Equip the FeedStation Mobile with appropriate lighting and have it inspected by the relevant authority before using it on public roads. Follow the regulations for agricultural vehicles that are allowed to tow machines.
Voltage (system)	24 VDC
Empty weight	2 boxes = 1091 kg / 4 boxes = 1218 kg (excl. dosators and antennas)
Max. weight	3100 kg (maximum axle load)
Tire size and pressure	10.0/75-15.3 TBL - max. 5.5 bar

Appendix 1 Dimensions

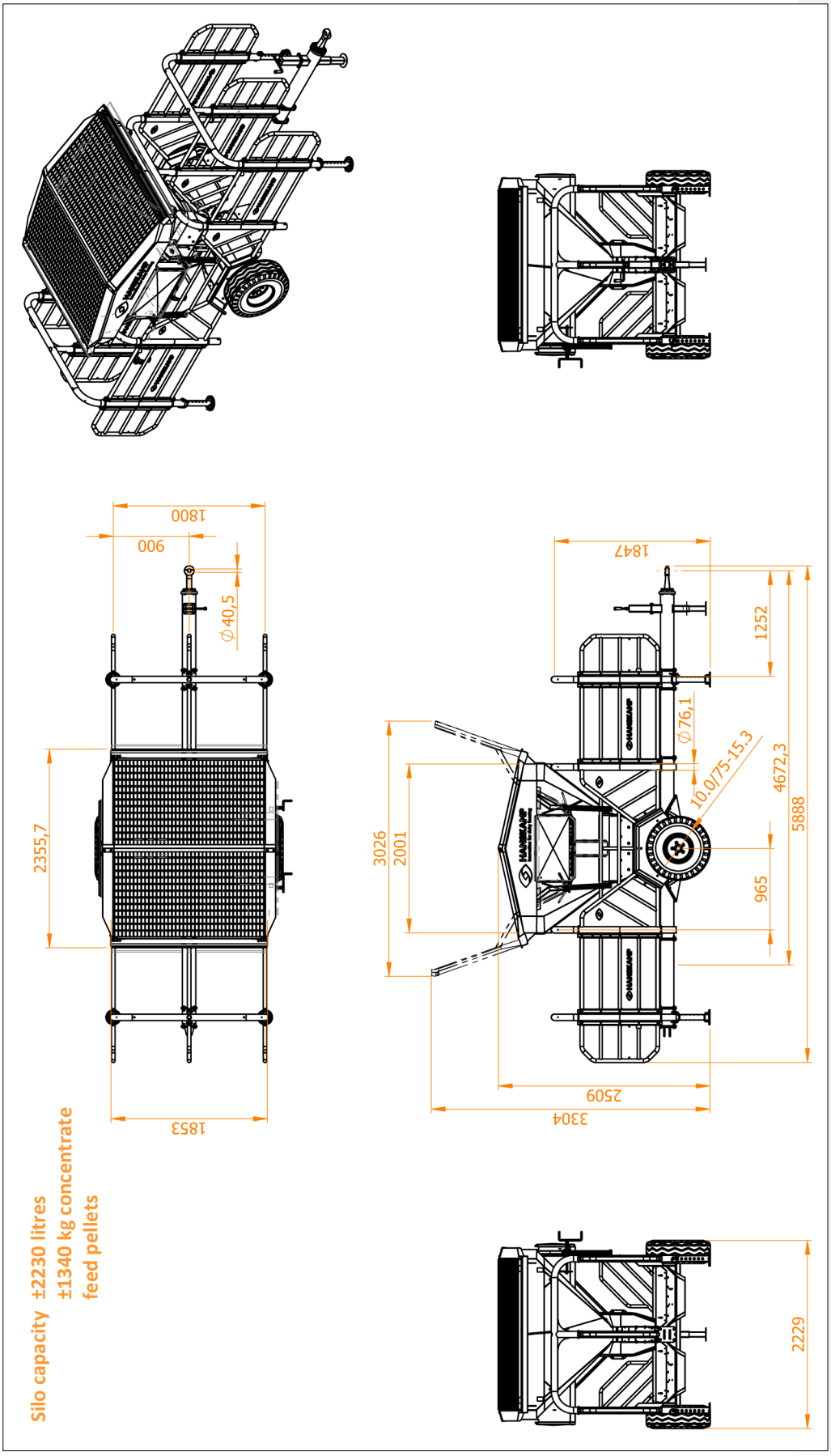

Appendix 2 Dimensions

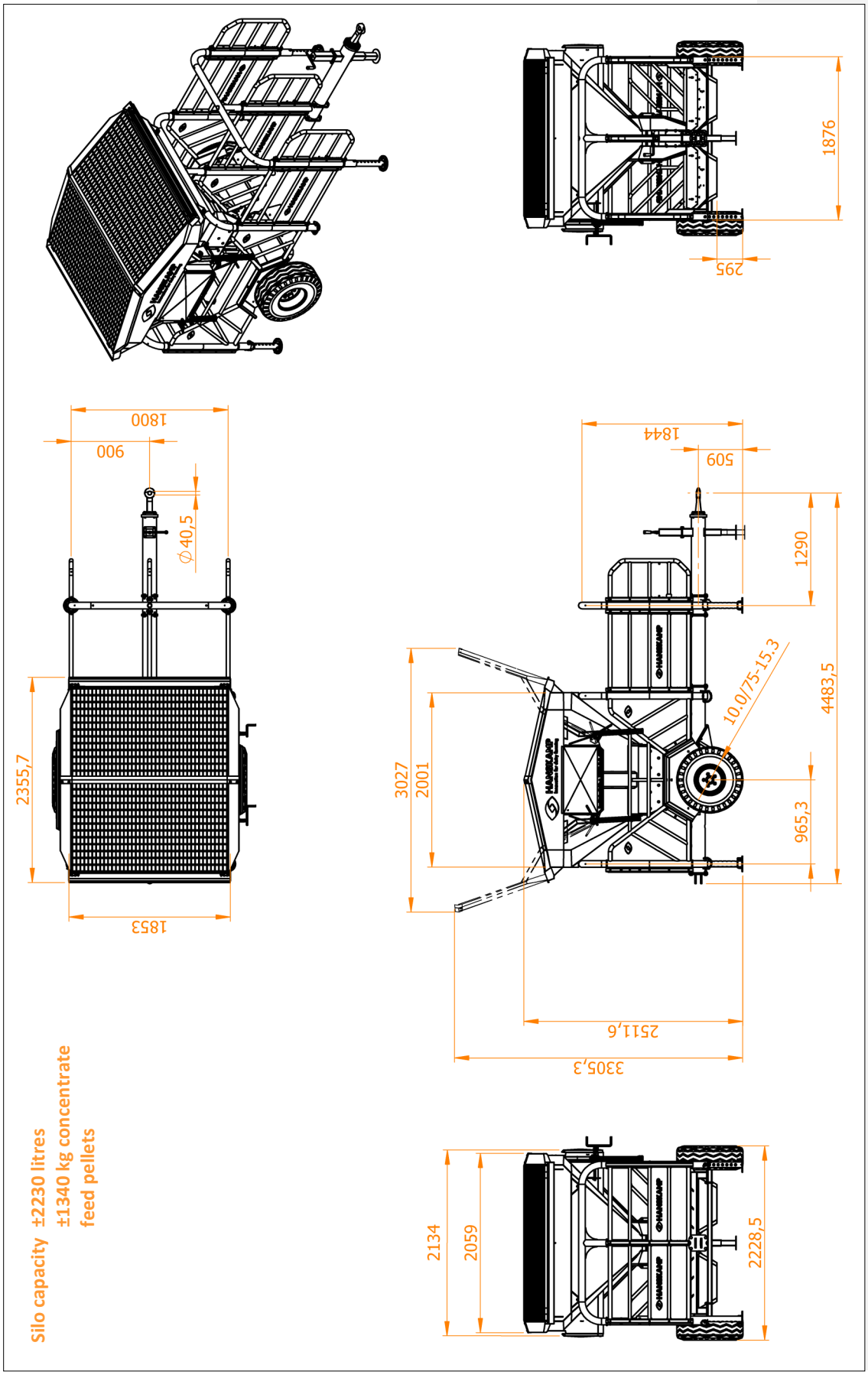

Appendix 3 Description of Components of Appendix 1 & 2 FeedStation Mobile

Article number	Description	Quantity 2 feeding places	Quantity 4 feeding places
004-600-003	Feed trough FeedStation Mobile	2	4
004-600-004	Intermediate tube under fencing FeedStation Mobile	1	2
004-600-005	Double anti-jump bracket FeedStation Mobile	1	2
004-600-006	Side fence FeedStation Mobile	5	6
004-600-022	Mounting profile 90° for insert plate 2 boxes FeedStation Mobile	1	0
004-600-024	Partition stock FeedStation Mobile	0	0/1
004-600-025	Insert plate for 2 feeding places FeedStation Mobile	1	0
004-600-026	Partition 2 feed types for 2 boxes FeedStation Mobile	0/1	0
004-600-028	Towing eye	1	1
004-600-029	Axle 1950 mm 94/140/5 unbraked	1	1
004-600-037	Solar mounting clamp	8	8
004-600-040	U-bracket M12x1.75	4	4
004-600-041	Hinged gate FeedStation Mobile	3	6
004-600-045	Gel battery 90Ah 12 Volt	2	2
004-600-047	Solar panel 355 watt peak	2	2
004-600-052	Complete wheel FeedStation Mobile	2	2
004-600-060	Intermediate plate 2mm PA for silo and auger unit	2/4	4/8
004-601-000	FeedStation Mobile base	1	1
004-601-002	Bag of mounting materials FeedStation Mobile	1	2
010-405-000	Sticker set cutting texts FeedStation Mobile	1	1
010-406-000	Safety stickers inside cabinet FeedStation Mobile	1	1

Appendix 4 Feed dispenser with auger 50 grams

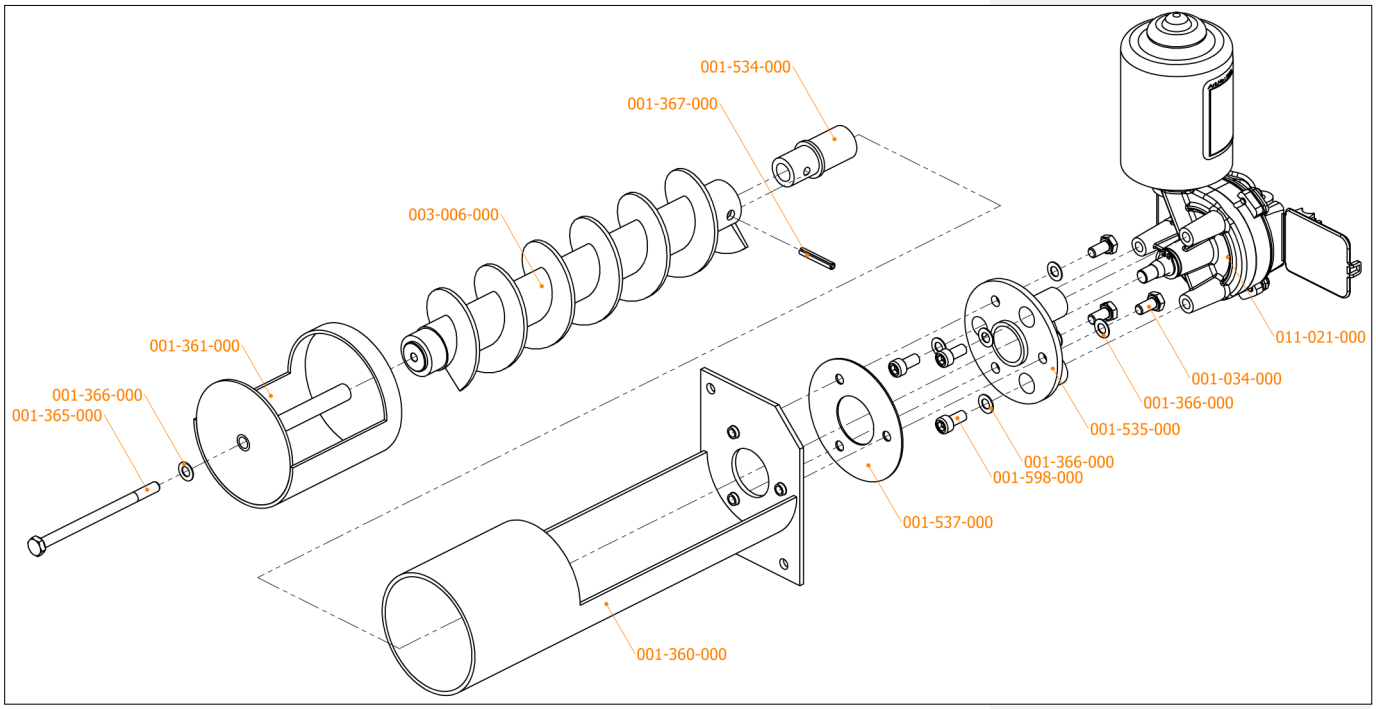

Article number	Description	Quantity
001-034-000	Bolt M6x12 A2 DIN 933	3
001-360-000	Motor plate and auger tube	1
001-361-000	Drop-out head complete	1
001-365-000	Bolt M6x95 DIN 931	1
001-366-000	Spring washer M6 A2 DIN 137B	7
001-367-000	Tension pin 4x26mm A2 DIN 1481	1
001-534-000	Coupling piece M8 plastic for DC motors	1
001-535-000	Plastic insulation housing	1
001-537-000	Insulating paper	1
001-598-000	Allen screw M6x12 A2 DIN 912	3
003-006-000	DeltaFeeder auger steel 50 g	1
011-021-000	SolidState5 Motor	1

Appendix 5 Energy control unit

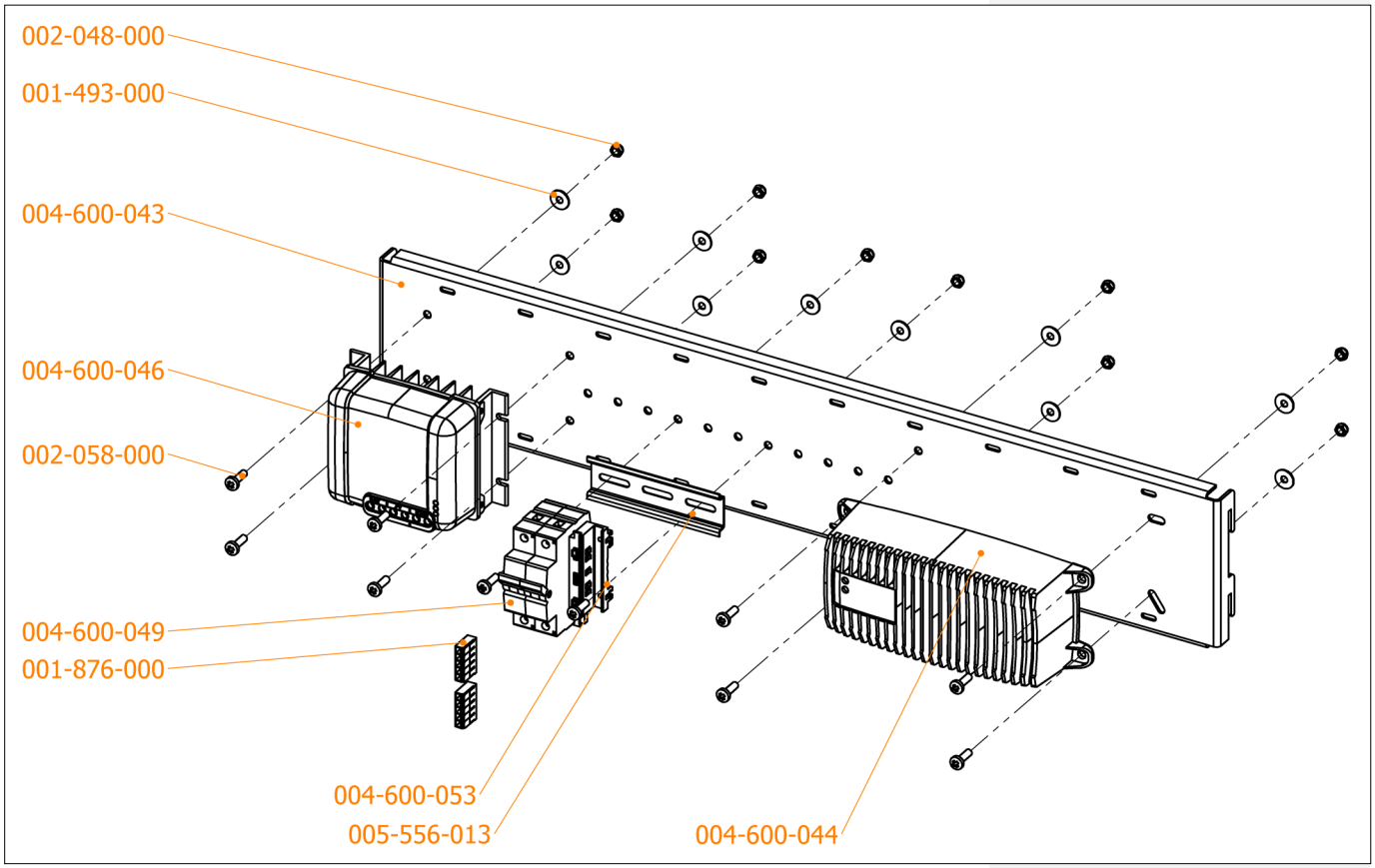

Article number	Description	Quantity
001-468-000	Ring terminal connector 1.5-2.5mm² M6 blue	8
001-493-000	Body washer M5 DIN 9021	14
001-876-000	Wago 5-way connector terminal	2
002-048-000	Nut M5	14
002-058-000	Metal screw M5x16 A2 DIN 7985 PZ	14
004-600-043	Mounting plate for solar panel components FS-Mobile	1
004-600-044	Battery charger 24V/5A	1
004-600-046	MPPT charge controller	1
004-600-049	Installation machine AC/DC 1-pole 16A	2
004-600-053	Wago DIN rail mounting adapter	1
004-600-074	DC/DC converter 24 VDC / 24 VDC	1
005-556-013	DIN rail	1

Hanskamp AgroTech BV
Xenonstraat 6
7031 HX Wehl
The Netherlands
Tel: +31 (0)314 - 393 797
www.hanskamp.com

Also take a look at:

