FeedStation Walk-Through Extended

044-060-001 to 044-090-001
& 044-060-002 to 044-090-002

Out of parlour feeder
Voerstation
Futterstation
Distribution alimentation concentré (DAC)

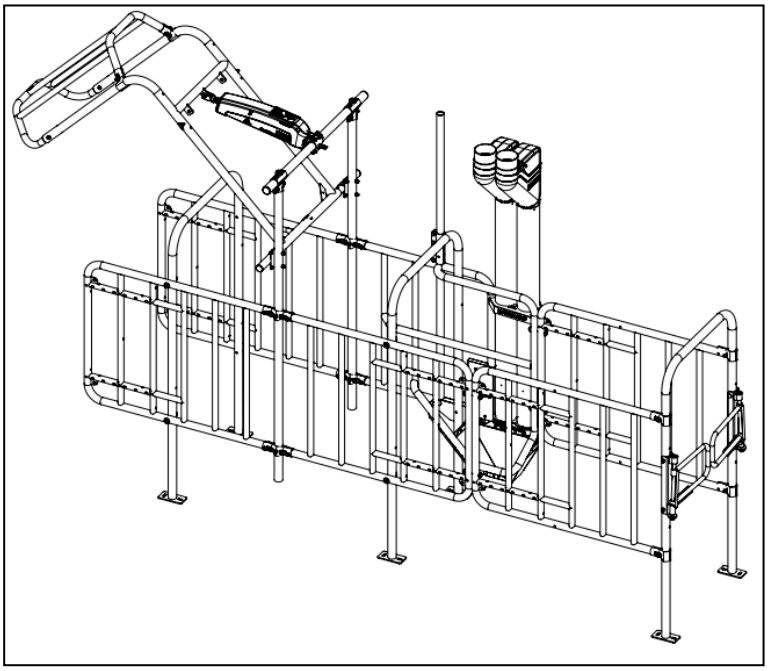

Service information **EN**

HANSKAMP
Innovation for dairy farming

Item number: 010-330-000

Date: December 2025
Version 1.2 - Translation of Original Instructions for use
According to Annex 1 Chapter 1.7.4 Machine Guideline 2006/42/EG

Wehl,
The Netherlands
www.hanskamp.com

1

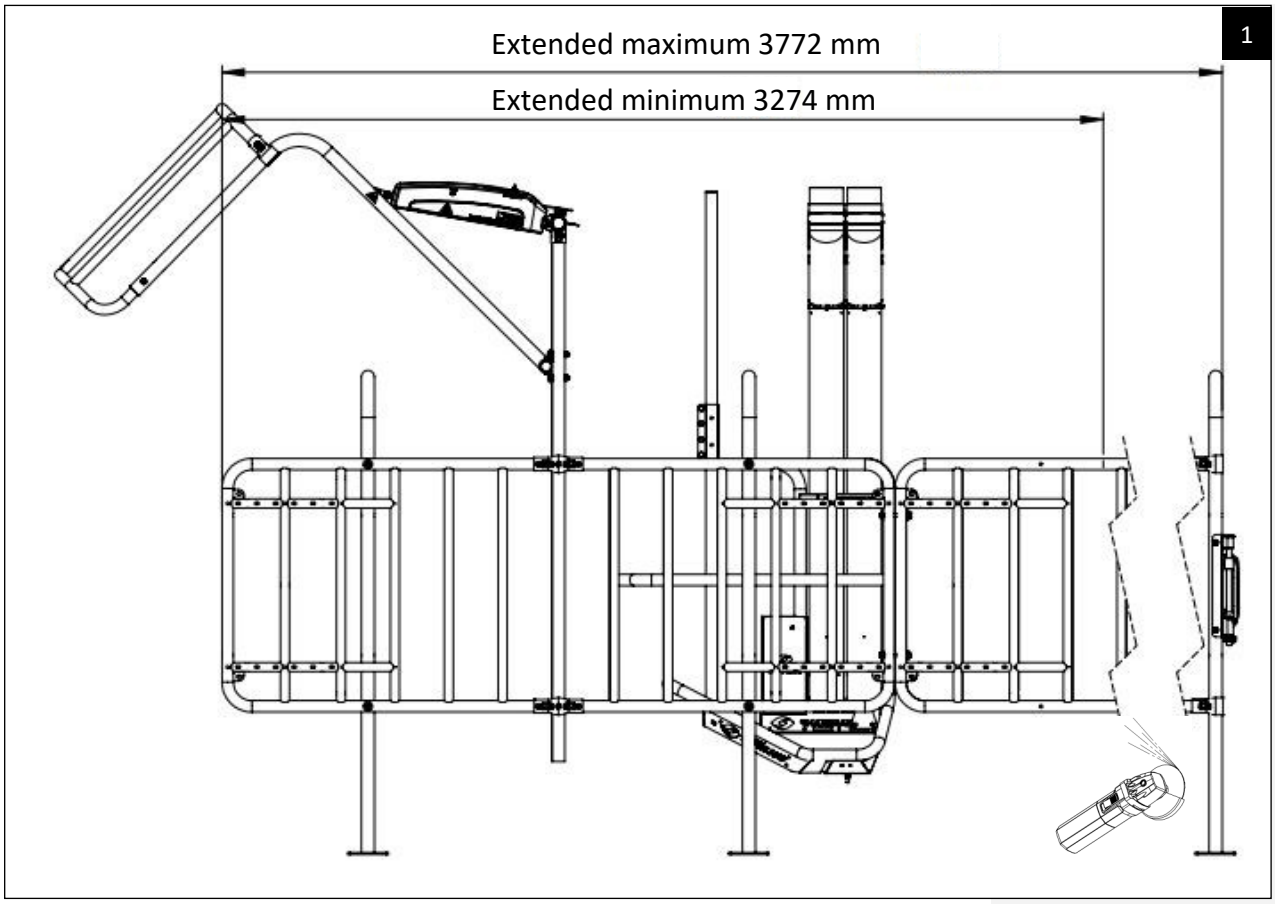
Extended maximum 3772 mm
Extended minimum 3274 mm

2

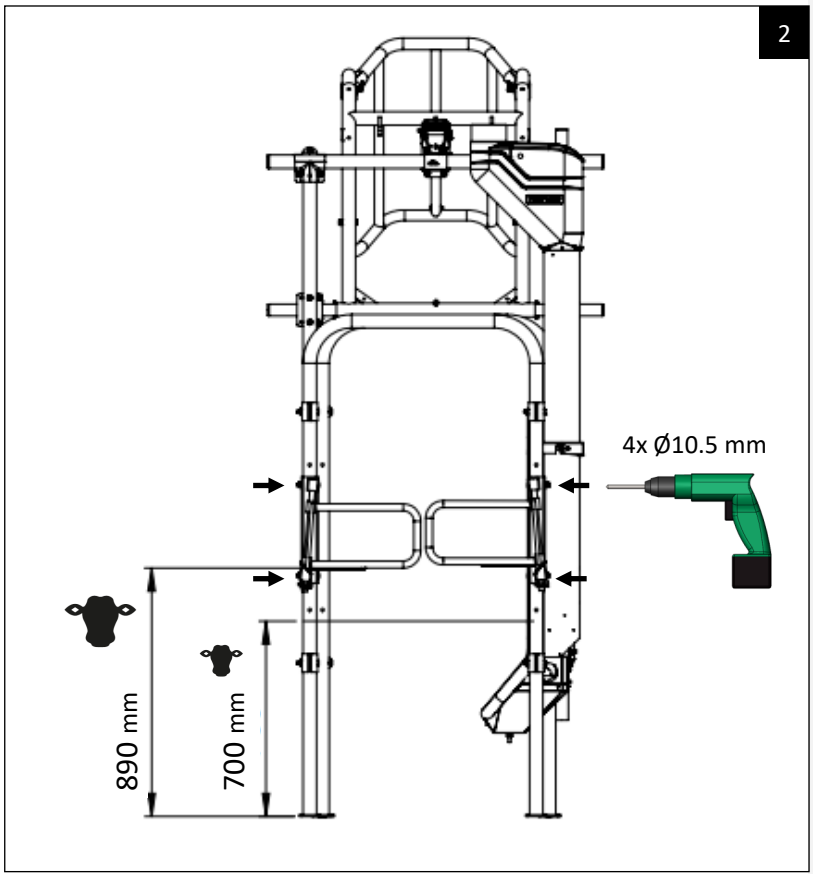
4x Ø10.5 mm
890 mm
700 mm

3

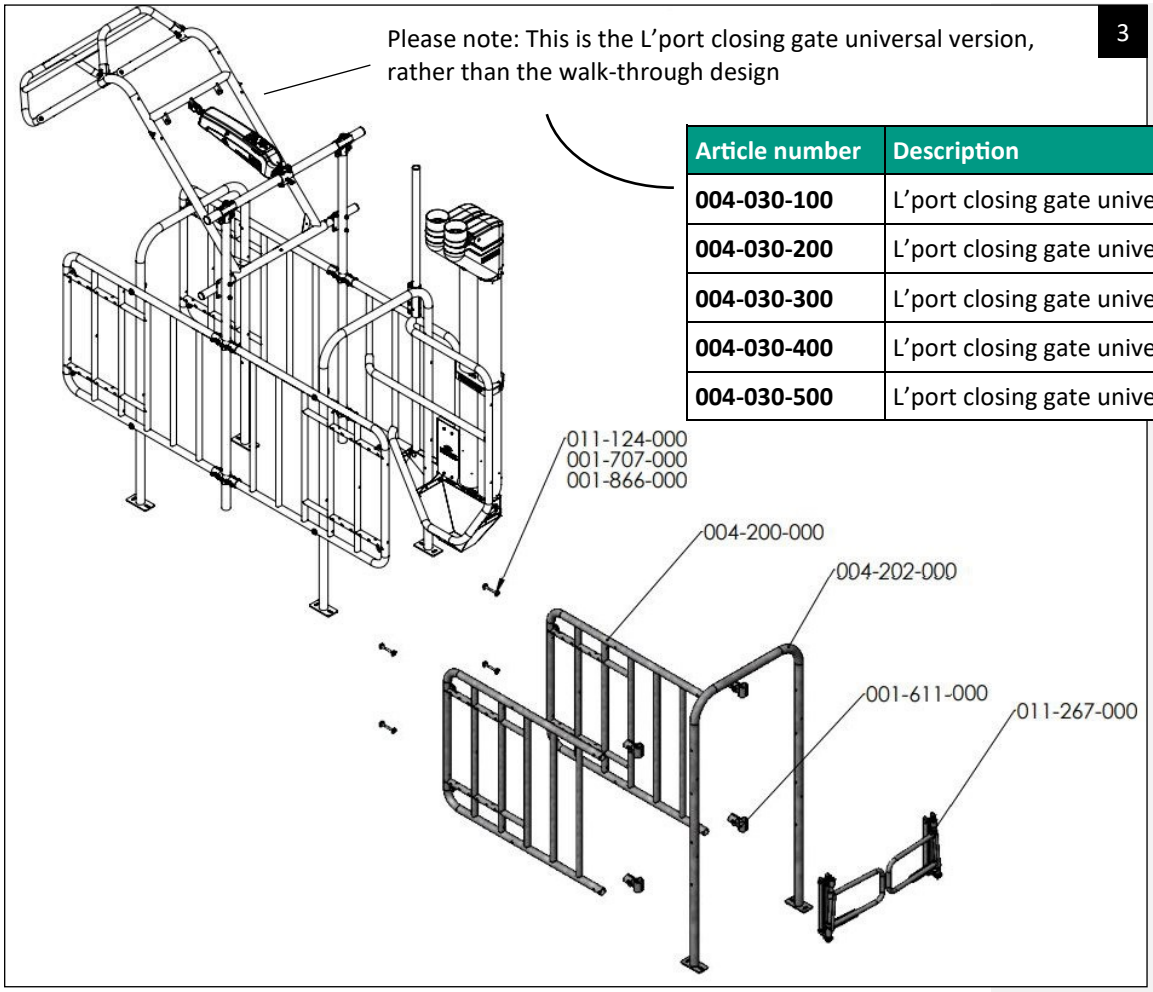

Article number	Description
004-030-100	L'port closing gate universal, black
004-030-200	L'port closing gate universal, green
004-030-300	L'port closing gate universal, blue
004-030-400	L'port closing gate universal, red
004-030-500	L'port closing gate universal, orange

	Mono	
Article number	**Description**	**Quantity**
011-124-000	Bolt M10 x 105 DIN 931	4
001-707-000	Washer M10 x 34 x 3 DIN 440	8
001-866-000	Self-locking nut M10	4
004-200-000	Side fence FS complete	2
004-202-000	Frame FS complete	1
001-611-000	T-clamp with bolts 1½ x 1¼	4
011-267-000	Return gate set	1

Option for mounting **with** T'port.

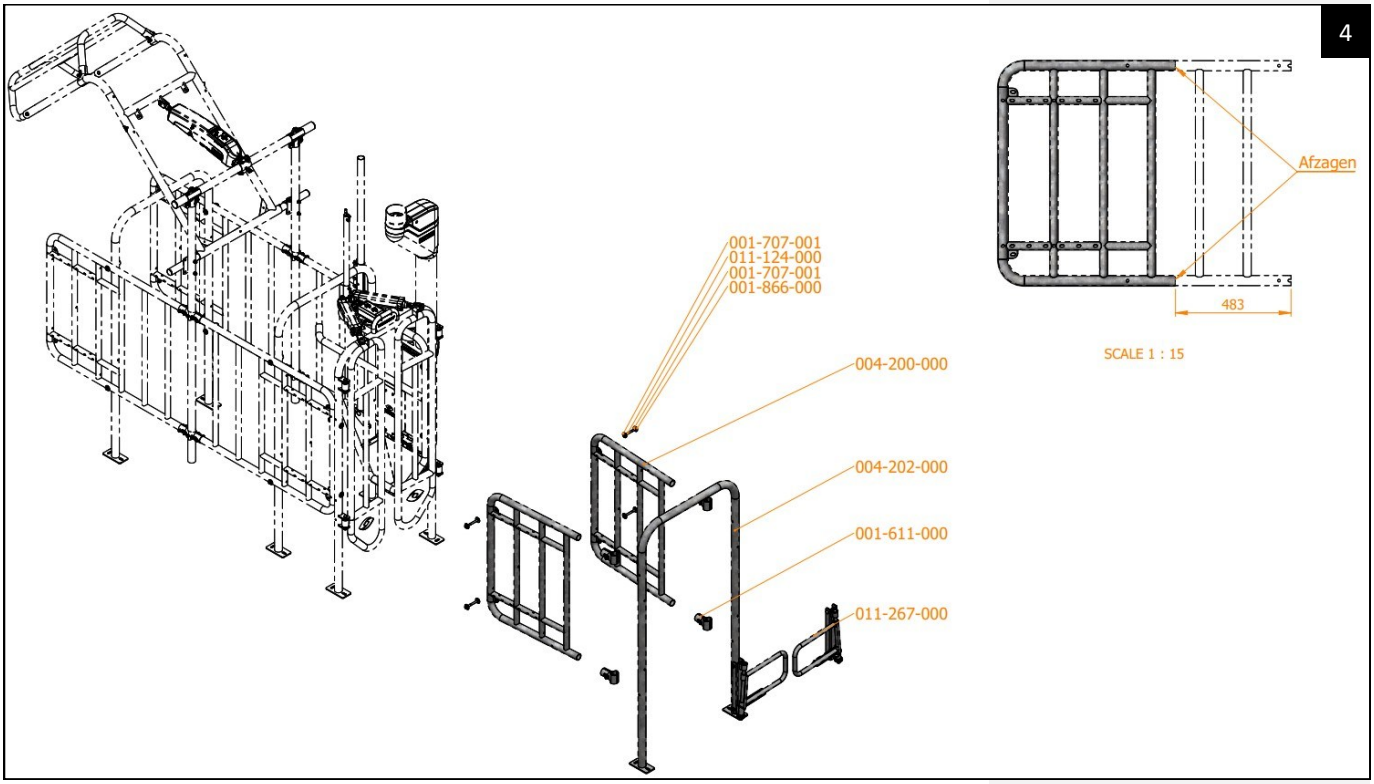

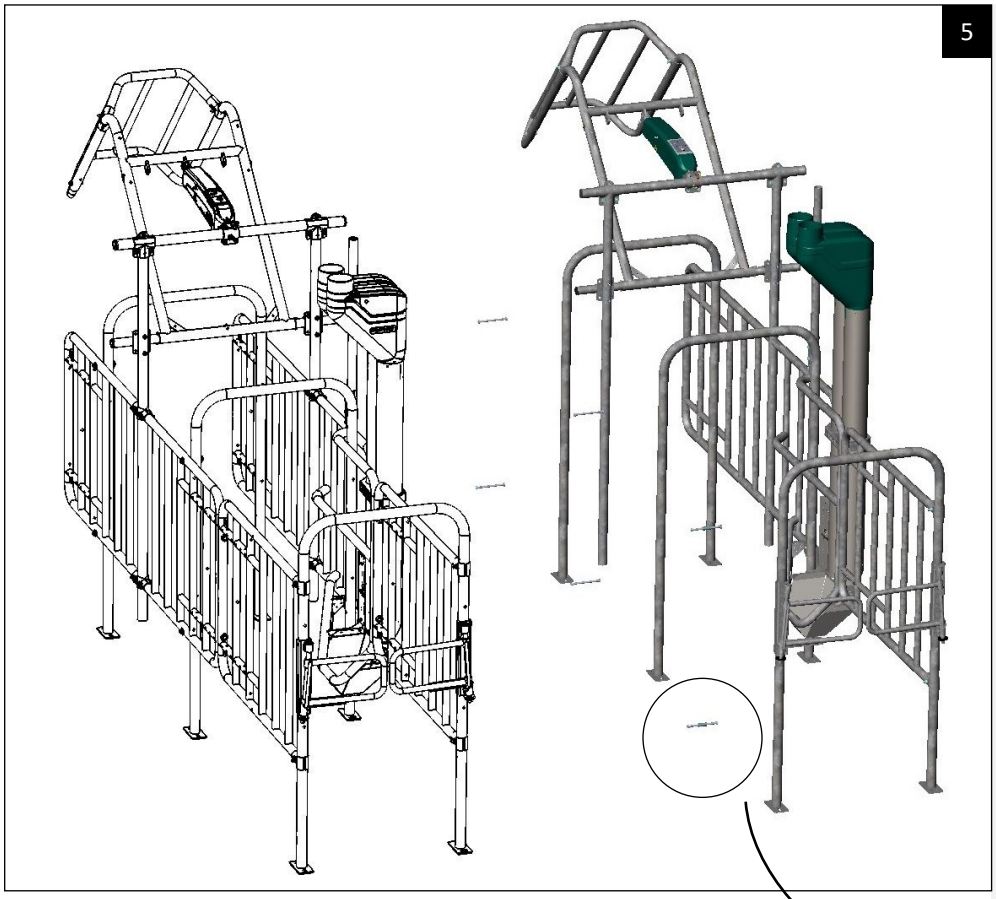



	Duo	
Article number	**Description**	**Quantity**
011-124-000	Bolt M10 x 105 DIN 931	6
001-707-000	Washer M10 x 34 x 3 DIN 440	12
001-866-000	Self-locking nut M10	12
004-200-000	Side fence FS complete	3
004-202-000	Frame FS complete	2
001-611-000	T-clamp with bolts 1½ x 1¼	6
011-267-000	Return gate set	2
004-342-000	Distance bushing	2
011-129-000	Bolt M10 x 150 DIN 931	6

	Tri	
Article number	**Description**	**Quantity**
011-124-000	Bolt M10 x 105 DIN 931	8
001-707-000	Washer M10 x 34 x 3 DIN 440	16
001-866-000	Self-locking nut M10	20
004-200-000	Side fence FS complete	4
004-202-000	Frame FS complete	3
001-611-000	T-clamp with bolts 1½ x 1¼	8
011-267-000	Return gate set	3
004-342-000	Distance bushing	4
011-129-000	Bolt M10 x 150 DIN 931	12

	Tetra	
Article number	**Description**	**Quantity**
011-124-000	Bolt M10 x 105 DIN 931	10
001-707-000	Washer M10 x 34 x 3 DIN 440	20
001-866-000	Self-locking nut M10	28
004-200-000	Side fence FS complete	5
004-202-000	Frame FS complete	4
001-611-000	T-clamp with bolts 1½ x 1¼	10
011-267-000	Return gate set	4
004-342-000	Distance bushing	6
011-129-000	Bolt M10 x 150 DIN 931	18

	Penta	
Article number	**Description**	**Quantity**
011-124-000	Bolt M10 x 105 DIN 931	12
001-707-000	Washer M10 x 34 x 3 DIN 440	24
001-866-000	Self-locking nut M10	36
004-200-000	Side fence FS complete	6
004-202-000	Frame FS complete	5
001-611-000	T-clamp with bolts 1½ x 1¼	12
011-267-000	Return gate set	5
004-342-000	Distance bushing	8
011-129-000	Bolt M10 x 150 DIN 931	24

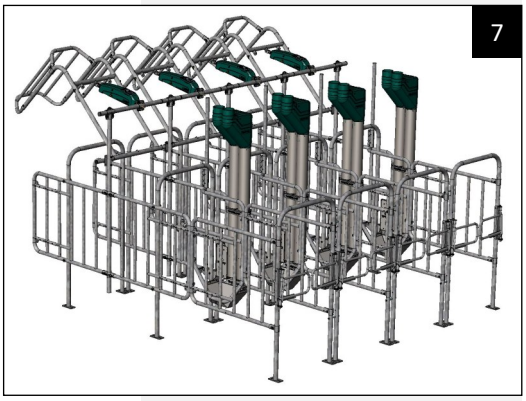

Hanskamp AgroTech BV
Xenonstraat 6
7031 HX Wehl
The Netherlands

Telephone +31 (0)314 - 393 797
E-mail info@hanskamp.nl
Website www.hanskamp.com

Visit us on: