PipeFeeder

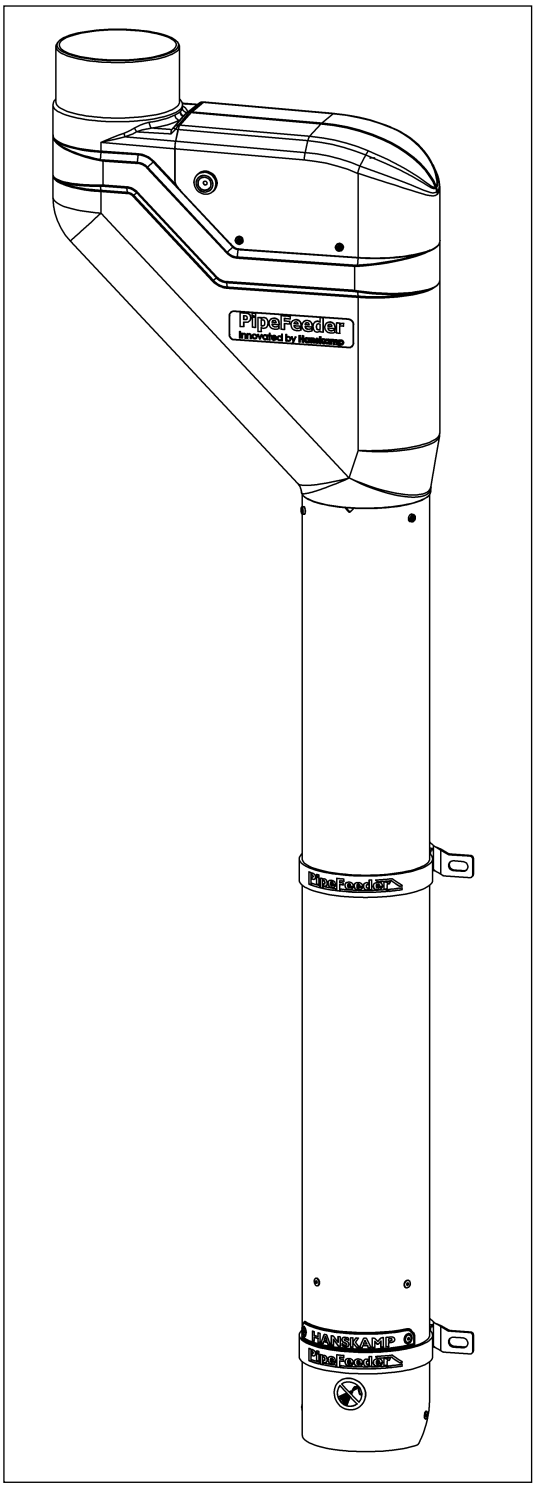

Krachtvoerdosator
Feed dispenser
Kraftfutterdosierer
Doseur d'alimentation

Installation and Operating Instructions **EN**

HANSKAMP
Innovation for dairy farming

Article number: 001-847-000

Date: December 2025
Version 3.6 - Translation of Original Installation and Operating Instructions
According to Annex 1 Section 1.7.4 of the Machinery Directive 2006/42/EC

Wehl,
The Netherlands
www.hanskamp.com

Foreword

Contents of the installation and operating instructions

This manual contains the information required to install and operate the PipeFeeder correctly. Please read this information carefully, and make sure you understand everything before configuring the PipeFeeder. Failure to do so may result in damage to the equipment. Please contact Hanskamp if the information is not clear to you, or if you need more information.

All the information in this manual was compiled with care. Hanskamp is not liable for any errors or shortcomings in this manual. The recommendations are intended as guidelines. All instructions, illustrations and specifications in this manual are based on the latest information available at the time of publication. Your PipeFeeder may have improvements, features, or options that are not covered in this manual.

Applicability

The table below shows the type numbers of the PipeFeeder to which this manual applies.

Model designation

Model	Type number
PipeFeeder grit	026-000-000
PipeFeeder 80 g per rotation	027-000-000
PipeFeeder 35 g per rotation	028-000-000
PipeFeeder HighSpeed (Manual 010-107-000)	029-000-000

Contact number of milking technology dealer

We recommend that you enter the name, phone number and e-mail of your milking technology dealer in the table below, so that you can always find the right information easily.

Name	
Address	
Phone number	
E-mail	

1. Introduction

The PipeFeeder excels in durability, simplicity and precision. The concentrate dosing unit was designed by technicians from the farming sector. They are experts who know that dairy farmers want to save on feed costs by dispensing precisely the right amount.

The FeedStation is supplied with an innovative PipeFeeder concentrate feeding system from Hanskamp, which ensures pellets are fed precisely and silently. The PipeFeeder features an ingenious anti-spill system, also developed by Hanskamp. Once the desired amount of feed has been released no further concentrate falls into the trough thus discouraging cows from banging against the FeedStation, robot or in the milking parlour.

The information in this manual is intended for dairy farmers and technicians.

- Dairy farmers can use the information to test and adjust the PipeFeeder.
- Technicians can use the information to install and set up the PipeFeeder.

2. Safety

2.1 Introduction

The 'Safety Warning' symbol warns about important safety messages on your PipeFeeder and in the manual. Use caution if you see this symbol; it means there is a risk of personal injury or death. Follow the directions of any safety messages.



Safety Warning Symbol

2.2 Warning texts

Note the use of the warnings **CAUTION** and **DANGER** in the safety messages. The following guidelines apply to these warnings:



Caution! Indicates a potentially hazardous situation which could result in minor personal injury or damage to equipment or the environment if the warning is ignored.



Danger! Indicates a potentially hazardous situation which could result in death or serious injury if ignored.

2.3 Safety instructions

You are personally responsible for operating and maintaining your PipeFeeder safely. You must make sure that you and anyone else who operates the equipment, performs maintenance on the PipeFeeder or works in the vicinity of the PipeFeeder, are familiar with all the safety information in this manual.

Safety is in your hands. Proper safety measures protect you and the people around you. Incorporate these measures into your safety programme. Make sure that everyone who uses, carries out maintenance, or works in the vicinity of the PipeFeeder is aware of these safety measures. Do not risk injury or death by ignoring the safety precautions.

- PipeFeeder owners must train users before the PipeFeeder is used. This training must be repeated at least once a year.
- The user must read, understand and follow all the safety and operating instructions in the manual.
- Anybody who has not read and understood all the safety and operating instructions must not operate the PipeFeeder.
- Do not make any modifications to the equipment. Unauthorised modifications may affect operation, affect the service life of the equipment, and/or result in personal injury.
- Only use original spare parts, and make sure that they are fitted by authorised technicians.
- The PipeFeeder must be shielded so that the dosing system is inaccessible. This separation must comply with European standards and guidelines. Without this separation, the PipeFeeder does not meet the safety requirements that Hanskamp sets for the product.

2.3.1 General safety

- Make sure that you have read and understood the manual and the safety instructions before connecting the power supply to operate or adjust the PipeFeeder, or turning it off for maintenance.
- Only trained personnel may operate the PipeFeeder.
- Install all guards and safety devices before using the PipeFeeder.
- Wear proper protective clothing and equipment.
- Before cleaning the PipeFeeder or performing maintenance on it, switch off the power supply of the PipeFeeder by removing the plug from the socket, also be sure that the compressed air supply is depressurised.
- Make sure that phone numbers of emergency medical care available in your area are at hand.
- If you have any other questions, please contact your milking technology dealer.
- Review all safety-related topics with all users at least once a year.
- The PipeFeeder must be shielded so that the dosing system is inaccessible. This separation must comply with European standards and guidelines. Without this separation, the PipeFeeder does not meet the safety requirements that Hanskamp sets for the product.

2.3.2 Electrical safety

- Only a qualified electrician may install the PipeFeeder power supply.
- Check whether the earthing of the electrical system and all parts of the PipeFeeder comply with local rules and regulations.
- Replace any damaged electrical cables, cable sheaths, switches and parts immediately.
- Isolate or switch off the power supply before you open the lid of the PipeFeeder to work on the electrical system.

2.3.3 Safety during installation

- Make sure that you have read and understood the instructions in this manual.
- Check whether the PipeFeeder has been installed correctly, as described in the manual.

2.3.4 Safe operation

- Make sure that you have read and understood the manual and the safety instructions before connecting the power supply to operate or adjust the PipeFeeder, or turning it off for maintenance.
- Only trained personnel may operate the PipeFeeder.
- Before cleaning the PipeFeeder or performing maintenance on it, switch off the power supply of the PipeFeeder by removing the plug from the socket.
- Install the covers and guards before you operate the PipeFeeder.
- Keep hands, feet, hair and clothing away from live parts.
- Keep all unauthorized persons, especially small children, away from the PipeFeeder at all times.
- Before connecting the PipeFeeder to the power supply, make sure that all parts are properly tightened and that all cables and mountings are in good condition.
- If you have any other questions, please contact your milking technology dealer.

2.3.5 Safety during maintenance

- Make sure that you have read and understood the manual and the safety instructions before connecting the power supply to operate or adjust the PipeFeeder, or turning it off for maintenance.
- Only trained personnel may service and maintain the PipeFeeder.
- Before cleaning the PipeFeeder or performing maintenance on it, switch off the power supply of the PipeFeeder by removing the plug from the socket.
- Wear protective clothing and safety glasses when working on the pneumatic and electrical system.
- Make sure all guards and safety devices are installed when you have finished maintenance work.

2.3.6 Safety messages

- This chapter lists the general safety messages. Specific safety messages, where potential hazards may arise if the procedures or instructions are not followed, are included in the appropriate sections of this manual.

3. Installation and Operating Instructions

General description

Hanskamp's PipeFeeder is an electric feed dosing system developed for feeding concentrates in pellet form (Fig. 1). PipeFeeder is designed for the supply of concentrate, either linked to the feed computer or used for in parlour feeding. Read the complete installation instructions and keep the safety instructions in mind.

If the PipeFeeder is controlled by an ControlUnit from Hanskamp, see also installation instructions art. no. 001-841-000. This can be requested from the manufacturer. If the PipeFeeder is not controlled by the ControlUnit, always consult the manual for the relevant control unit.

The order numbers and names of some parts are listed in the appendix.

Transport and storage

The PipeFeeder will be shipped in a box containing two PipeFeeders. When shipping a complete milking parlour feeding system, all included boxes will be transported on a pallet. This pallet is completely sealed and the corners are covered with tape to prevent damage. The PipeFeeder must be stored in the same way.

Caution! Always move the pallet using a suitable means of transport (forklift, pallet fork, pallet truck, etc.).
Caution! Parts may fall off the pallet/out of the box when opening and unpacking the pallet/box.

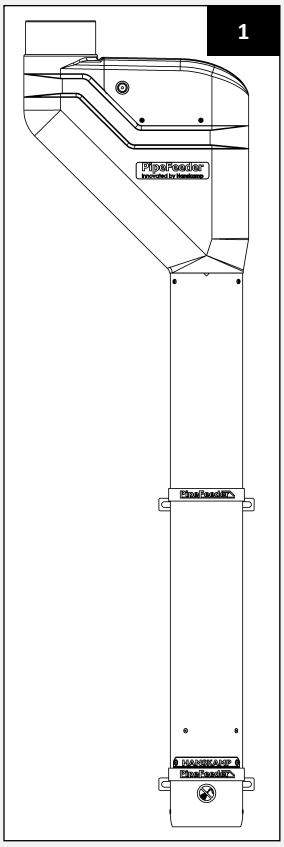

Box contents:

1. 2 x PipeFeeder feeding dosator;
2. 2 x bag with 2 pipe clamps, art. no. 001-902-000;
3. 2 x cover for motor;
4. 2 x bag with screws for cover and grommet.

Type designation;
can be found on the backside of the pipe, just under the plastic part

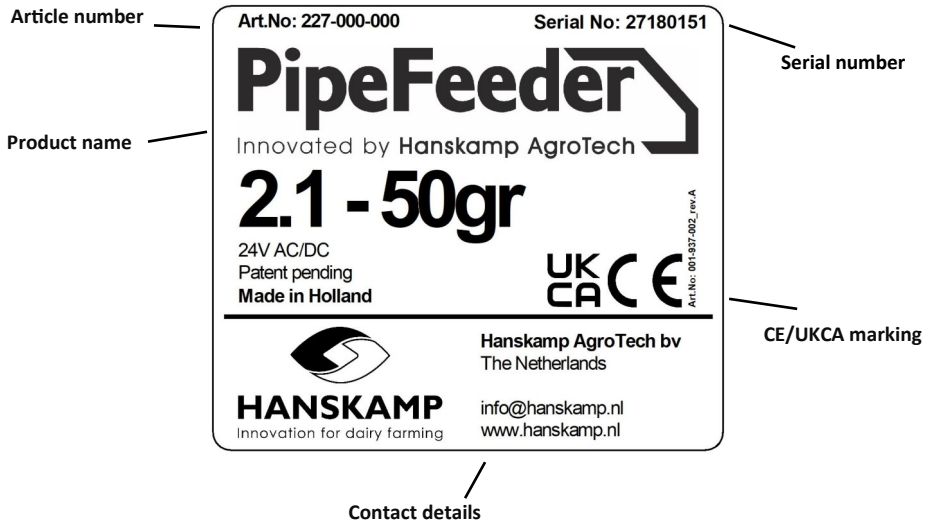

Safety stickers

The user and installer are responsible for the safe operation and maintenance of the PipeFeeder. Safety stickers are used to ensure safety in and around the PipeFeeder. These stickers must be placed correctly. Information about which stickers should be attached where can be found further on in these instructions for installation and use.

Application of sticker(s)

- Clean and dry the surface to which the sticker is to be applied.
- Make sure that the surface temperature is above 5 °C.
- Determine the correct position of the sticker.
- Remove a small part of the foil on the backside of the sticker.
- Place the sticker on the surface and press a small part of the adhesive layer onto the surface.
- Carefully remove the foil and apply the whole sticker on the surface.
- If necessary, poke small air holes in the sticker with a needle and use the foil to smoothen the sticker.

Sticker maintenance

- Keep safety stickers clean and legible. Clean safety stickers with water and mild soap. Do not use solvents or abrasives that could damage the safety stickers.
- Replace missing or illegible safety stickers.

Safety stickers are available from Hanskamp. Always use the article numbers in correspondence.



001-702-000
Warning sticker
Danger risk of getting your hand stuck under the pipe.



001-755-000
Warning sticker
The PipeFeeder can start automatically.

Installation

1. The PipeFeeder is designed to be mounted on a wall or feed station. First determine where the PipeFeeder should be mounted and at what height. To do this, use the mounting brackets provided (art. no. 001-902-000).
2. Before mounting the bolts and nuts, lubricate them with sufficient copper grease.
3. If the distance between the feed trough and the dosing unit is too large, we recommend using a down pipe fitted directly underneath the dosing unit. The PipeFeeder is designed for hanging directly above the feed trough, so the fall height remains low and noise and dust are reduced. Always mount the PipeFeeder slightly above the feed trough so that sufficient air can flow through (Fig. 2). Always mount the PipeFeeder pipe with the long side towards the animal (Fig. 3). Examples for assembly can be viewed at www.hanskamp.com.

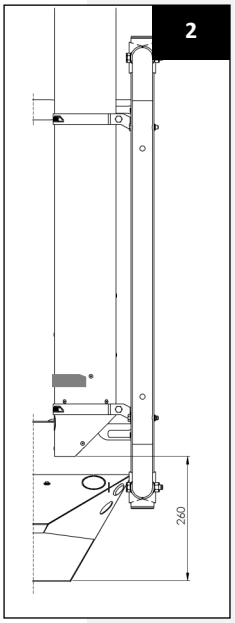

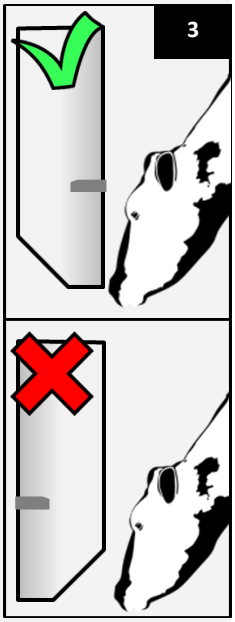

Caution! Mounting material to mount the PipeFeeder to the wall or on the feeding station, is not included.

Caution! Always leave ± 3 cm of space between the bottom of the Pipe-Feeder and the top of the feed trough. This allows air to flow under the PipeFeeder.

Caution! Always mount the PipeFeeder with the long side towards the animal.

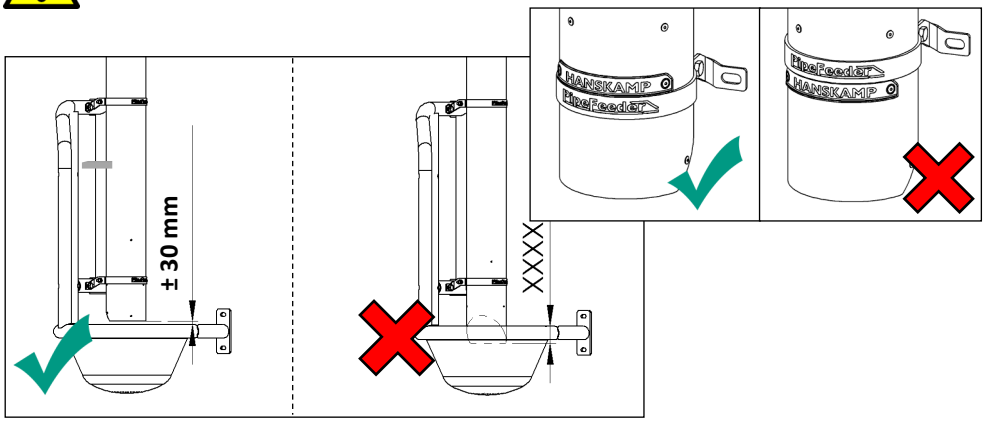

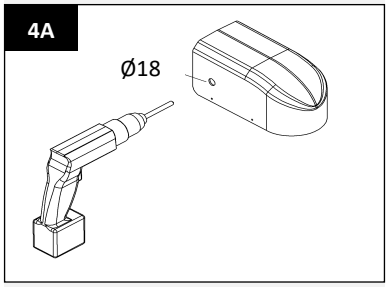

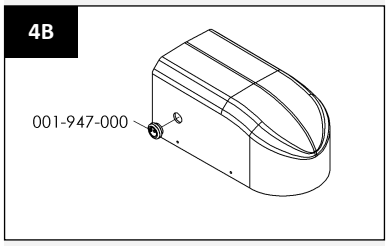

4. Use a well-shielded electricity cable to connect the dosing unit. By default, the motor rotates counterclockwise.

Caution! Always switch off the electricity to the control unit before mounting.

Caution! Make sure there is always a plug or lockable switch placed between the PipeFeeder and the energy supply that allows the PipeFeeder to be disconnected from the energy supply.

5. Fit the cable through the lid of the PipeFeeder using the supplied membrane grommet (art. no. 001-947-000). To do this, drill a hole (Ø16 mm) through the lid at the desired location (Fig. 4A). Then connect the other end of the cable to the desired output of the control unit.
6. Make a solid and tight connection with the supply auger. The top connection of the PipeFeeder is Ø125 mm. This fits a slide coupling socket of PVC or PP exactly across. This prevents water, moisture or dirt from entering the stock of the PipeFeeder (Fig. 5).

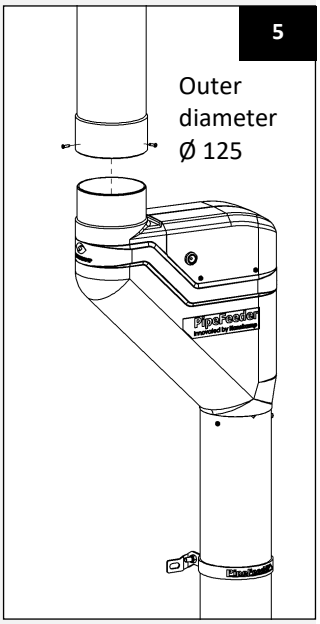

Caution! Insufficient sealing with the supply auger can cause problems that affect the operation of the PipeFeeder.

Adjusting the DC PipeFeeder anti-spill device

7. The PipeFeeder should be correctly adjusted before putting into service. Adjustments are performed as follows:

Caution! Before the next step, first switch off the electrical supply of the control unit.

- Remove the lid from the PipeFeeder. Remove the motor plate by unscrewing the 4 bolts (Fig. 6).
- Remove the motor with motor plate and coupling piece from the shaft (Fig. 6).
- Turn the star on top of the drive shaft.
- Make sure that the arrow on the star is aligned with the recess on top of the stainless steel pipe (Fig. 7).
- Push the motor with motor plate and coupling piece back onto the drive shaft. Install these by tightening the 4 bolts again.
- Place the lid back on the PipeFeeder (Fig. 8).
- Switch on the electric power.
- Fill the PipeFeeder and allow to rotate once to check (give signal).

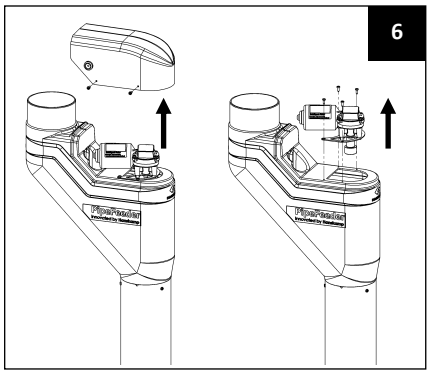

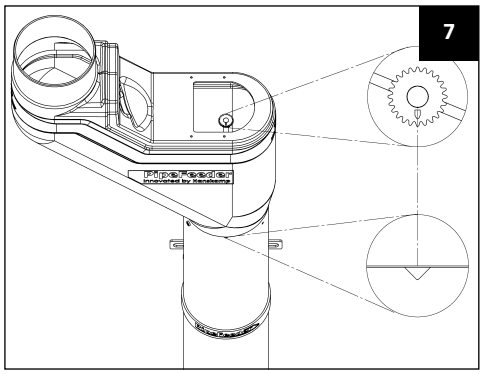

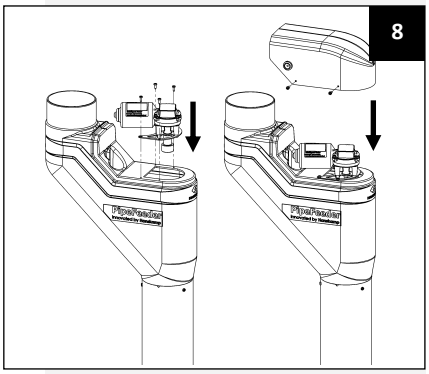

This adjustment should ensure that the drop opening is closed. As a result, a bumping cow is not rewarded (anti-spill principle). This adjustment should be applied in both the in parlour installation as well as in the concentrate feeding box.

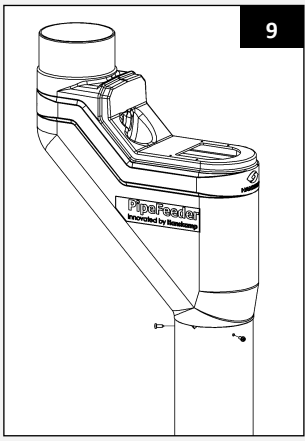

8. When installation is not completely correct the plastic part will be able to rotate freely with respect to the stainless steel tube. When the plastic part is rotated the adjustment procedure must be followed again (step 7). In addition, it must be ensured that after mounting or twisting of the plastic part, the motor is correctly placed on the shaft.

Important!

- Hanskamp can only guarantee that the PipeFeeder is anti-spill if the motor is correctly adjusted.
- Make sure that all the wires are carefully concealed out of the reach of the animals. Otherwise hazardous situations may arise.
- Always carefully mount the lid covering the motor before operating the PipeFeeder. Otherwise dangerous situations may arise (Fig. 8).

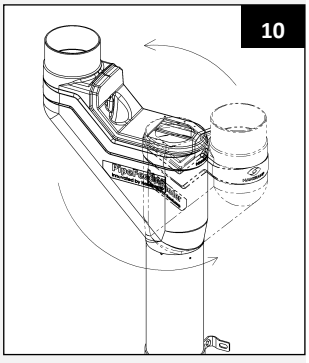

9. The PipeFeeder works completely electrically. The motor drives the shaft that rotates a scoop mechanism at the bottom of the stainless steel pipe (Ø129 x 2 mm). This mechanism doses the feed. If several dosing units are controlled simultaneously with a switch, for example per side (during in parlour feeding), then several PipeFeeder dosing units can be connected to a single feeding line. Make sure that the maximum allowed current is not exceeded, which is indicated on the power supply (art. no. 002-812-000 or 002-813-000 PowerUnit).

Calibration

10. The PipeFeeder is calibrated by having the feeding computer send out a pulse 10 times. You then weigh the supplied feed, divide it by 10 and enter this value in the feed computer. Repeat this procedure monthly and also after changing feed types.

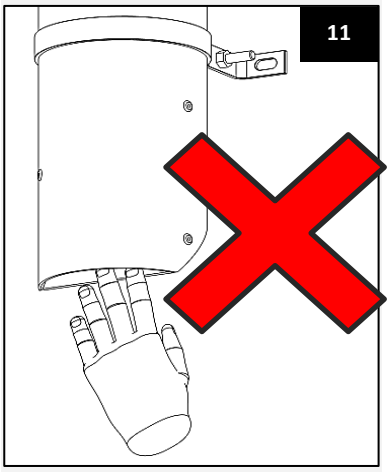

Caution!

- **The PipeFeeder is only suitable for cylindrical concentrate pellets with a diameter of Ø2 to Ø8 mm. The manufacturer cannot guarantee proper functioning with feed of other shapes or dimensions.**
- **When installing the PipeFeeder, make sure that the pressure of the concentrate on the doser does not exceed 50 kg.**
- **Never insert your hand into the bottom of the PipeFeeder when it is still in operation or is connected to the electrical power supply (Fig. 11). The size of the exit point is limited by a bar to prevent cuts.**

Maintenance

1. Check the PipeFeeder installation daily for faults and wear. Do this by means of a control test on the feed motors. Make sure that possible operating noises and vibrations caused by the PipeFeeder are reduced or eliminated as much as possible.
2. If the PipeFeeder needs maintenance and is connected to the control unit, ensure that the PipeFeeder cannot start unexpectedly. Make sure there is no voltage on the installation! To do this, completely de-energise the system by disconnecting the power supply to the control unit and the dosing motor.
3. It is recommended that repairs and maintenance be carried out by a specialist.
4. To avoid electric shocks or getting trapped in the feed auger never open the housing when the PipeFeeder is still running.
5. In the interest of the safety of all concerned, the user/owner of the PipeFeeder is obliged to follow the recommendations and instructions given in the instruction manual. Failure to do so is the responsibility of the user. The manufacturer cannot be held liable in any way for injury or damage to or caused by the product.

Caution! Always disconnect the power supply to the system before carrying out maintenance work or disassembling the PipeFeeder!

Cleaning

Clean the PipeFeeder regularly with a moist cloth. Do not spray water under the hood or in the storage pipe. To guarantee proper functioning of the equipment make sure the outlet is clean and stays clean.

Caution! Do not use a high pressure cleaner in/on the PipeFeeder. This can lead to blockages in the system.

Disassembly

In case of disassembly, all parts must be separated according to material type and must be disposed of via the proper type of waste management systems.



001-976-000
Ban sticker
It is prohibited to spray with water.

Warranty limitations

Costs and expenses resulting from the following are excluded from the warranty:

- Using the equipment improperly, in violation of the specifications in the installation and operating instructions;
- The consequences of any intervention by mechanics other than mechanics approved by Hanskamp for carrying out certain work;
- Incidents such as freezing, ice, fire, flood, flooding or any other problems caused by excessive water, and lightning;
- Defective electrical system or earthing;
- Using compressed air that does not meet Hanskamp's quality standards;
- Damage to the electrical system caused by pests and the like.

The warranty does not apply to consequential damages unrelated to the machine itself. All systems have been tested, However, in the event of defects, Hanskamp AgroTech BV cannot be held responsible for consequential damage.

Overview of changes made in these installation and operating instructions

No.	Release date	Chapter(s)	Comments
1	06/2012	All	First release
1.1	01/2013	Installation	Addition DosPrint
2.0	10/2013	All	Up-to-date for version 2
2.1	06/2014	All	Update to standard for 2014
2.2	08/2014	All	New name and logo added
2.3	10/2015	All	General inspection
2.4	07/2016	CE-Declaration	Redundant guidelines deleted
2.5	11/2016	Page. 12	Scraper spring
3.0	2/2017	All	Update pictures, and old instructions which no longer apply deleted
3.1	8/2017		Scraper spring removed
3.2	1/2018	Installation	Image installation MF height added
3.3	4/2018	Annexes	Added numbers PF 2.0
3.4	01/2023	Pages 7 + 13	UKCA logo added. Changes made can be requested from Hanskamp.
3.5	04/2024	Pages 9 + 11 + 18	Page 9: Ø16 changed to Ø18 in Figure 4A. Page 11: Ø4 - Ø6 mm changed to Ø2 - Ø8 mm. Page 18: 228 - 35g version added.
3.6	12/2025	Pages 1 + 20	Page 1 Change of place name. Page 20 Change of address Hanskamp.

Copyright and disclaimer

The information in this publication is for informational purposes only, and is not intended as a sales quote. The products offered may differ from the images. Any brand or product references in this manual are for identification purposes only. The company and product names mentioned in this manual are trademarks. No part of this publication may be reproduced or made public without the prior written consent of Hanskamp AgroTech BV. Although this publication has been compiled with the greatest care, Hanskamp AgroTech BV is not liable for any damage that may arise due to any errors or omissions it might contain. The Dutch installation and operating instructions are the original installation and operating instructions. Translations into other languages are based on the Dutch installation and operating instructions as a source document. Hanskamp AgroTech BV accepts no liability for differences between the translations. If there are any doubts about the content and accuracy of the translated installation and operating instructions, the Dutch installation and operating instructions shall prevail.

Declaration of incorporation of complete machines IIA

(According to Annex IIA of the Machinery Directive 2006/42/EC, for completed machines)

We,
Hanskamp AgroTech BV
Broekstraat 17
7009 ZB Doetinchem
The Netherlands,

Authorised compiler(s) of the technical file:

H.J. Hanskamp,

declare under our sole responsibility that the following product:

PipeFeeder, type number 027-000-000,
Dosator for concentrate supply for dairy cattle,

to which this declaration relates, complies with the provisions of the following directive(s):

- Machinery Directive 2006/42/EC

The product also complies with the provisions of the following standards:

- NEN-EN-ISO 12100
- NEN-EN-IEC 60204-1
- NEN-EN-IEC 13849-1

If the PipeFeeder is not connected and the prescribed safety instructions are not used, this Declaration of Conformity is not applicable and no rights can be derived from this declaration.

Doetinchem, the Netherlands, 29 July 2016 H.J. Hanskamp



4. FAQs

Common problem	Possible cause	Solution
No feed dispension.	No feed in stock pipe.	Check auger and silo.
	Motor is not controlled by the controller.	Remove the cover of the motor and check the indicator lights on the PCB. Check power supply and control (voltage). (See manual ControlUnit. Provided when it is used as a control.)
	Check if the rotor spins. Connection piece between the motor and drive-shaft could be broken.	Remove the motor from the rotor and reinsert. Note the correct setting for anti-spill function (see page 10, step 7).
	Blockage by e.g. wood or plastic.	Remove the PipeFeeder from the wall and shake it empty. It should be possible to rotate the rotor by hand when the PipeFeeder is empty.
PipeFeeder is not anti-spill.	PipeFeeder is not set.	For readjustment, see page 10, step 7.
PipeFeeder does not dispense the right amount.	Calibration is incorrect.	Calibrate the controller (see page 11, step 10).

Appendix - Hanskamp can supply the following types of dosing units:

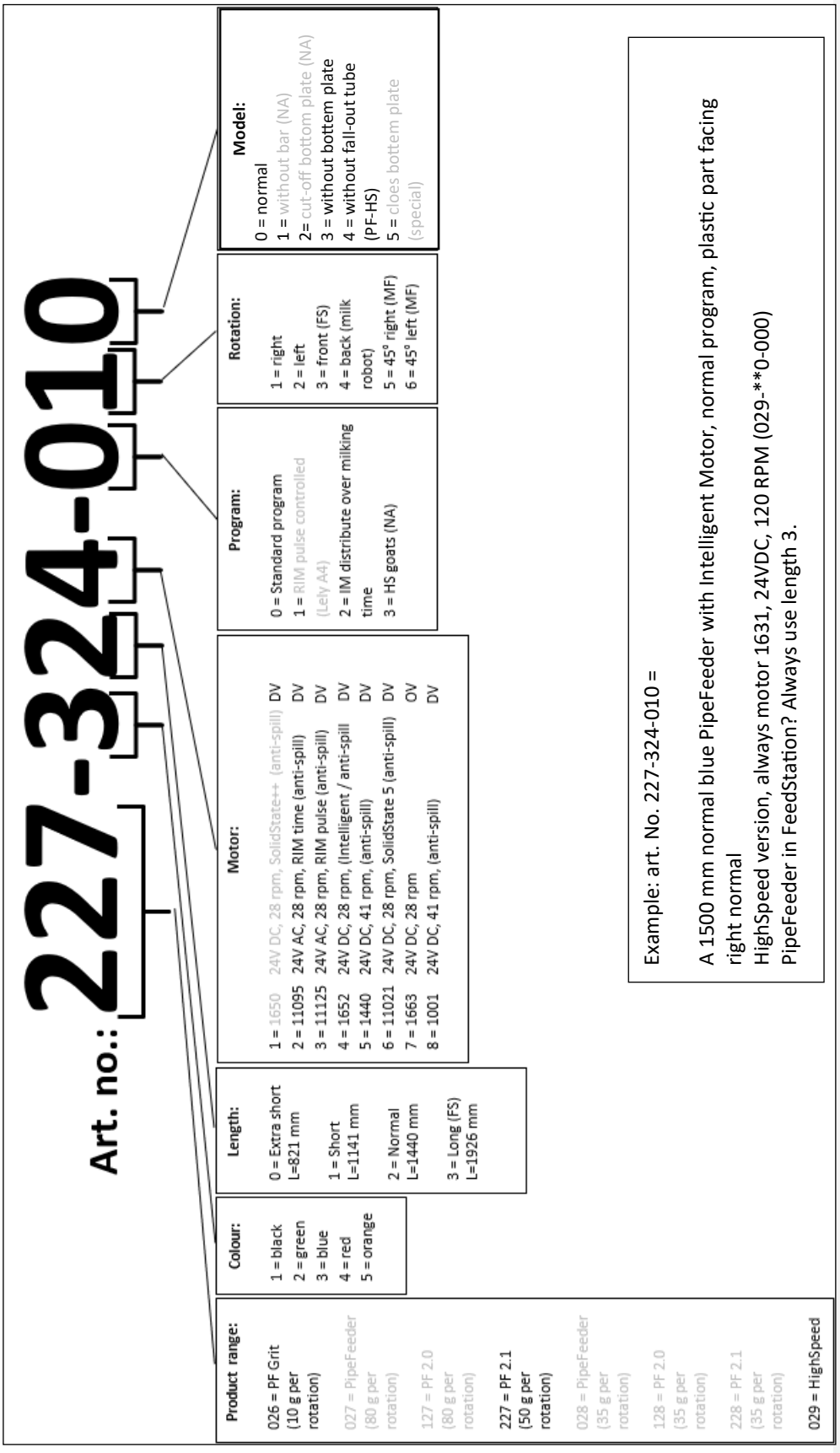

Appendix - Hanskamp can supply the following types of dosing units:

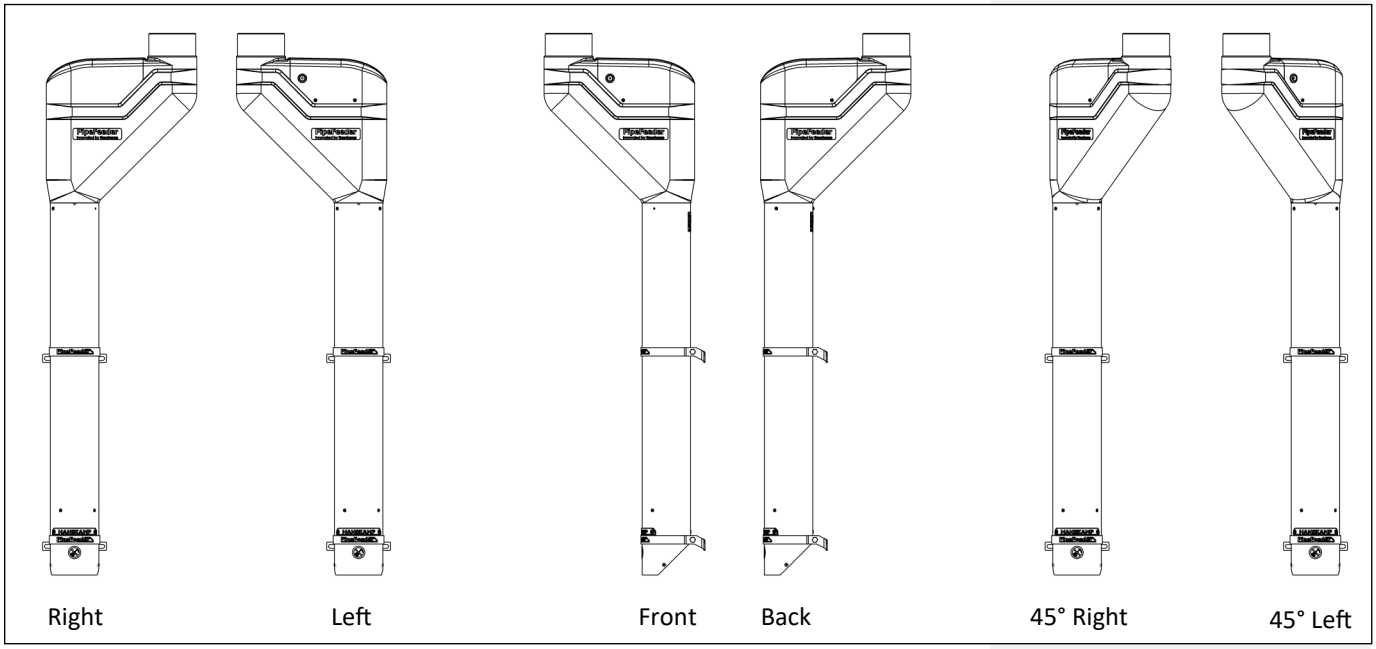

Appendix - Loose components

For maintenance or any other reason, spare parts can be ordered from Hanskamp.
Please use the product numbers indicated in the drawings below.

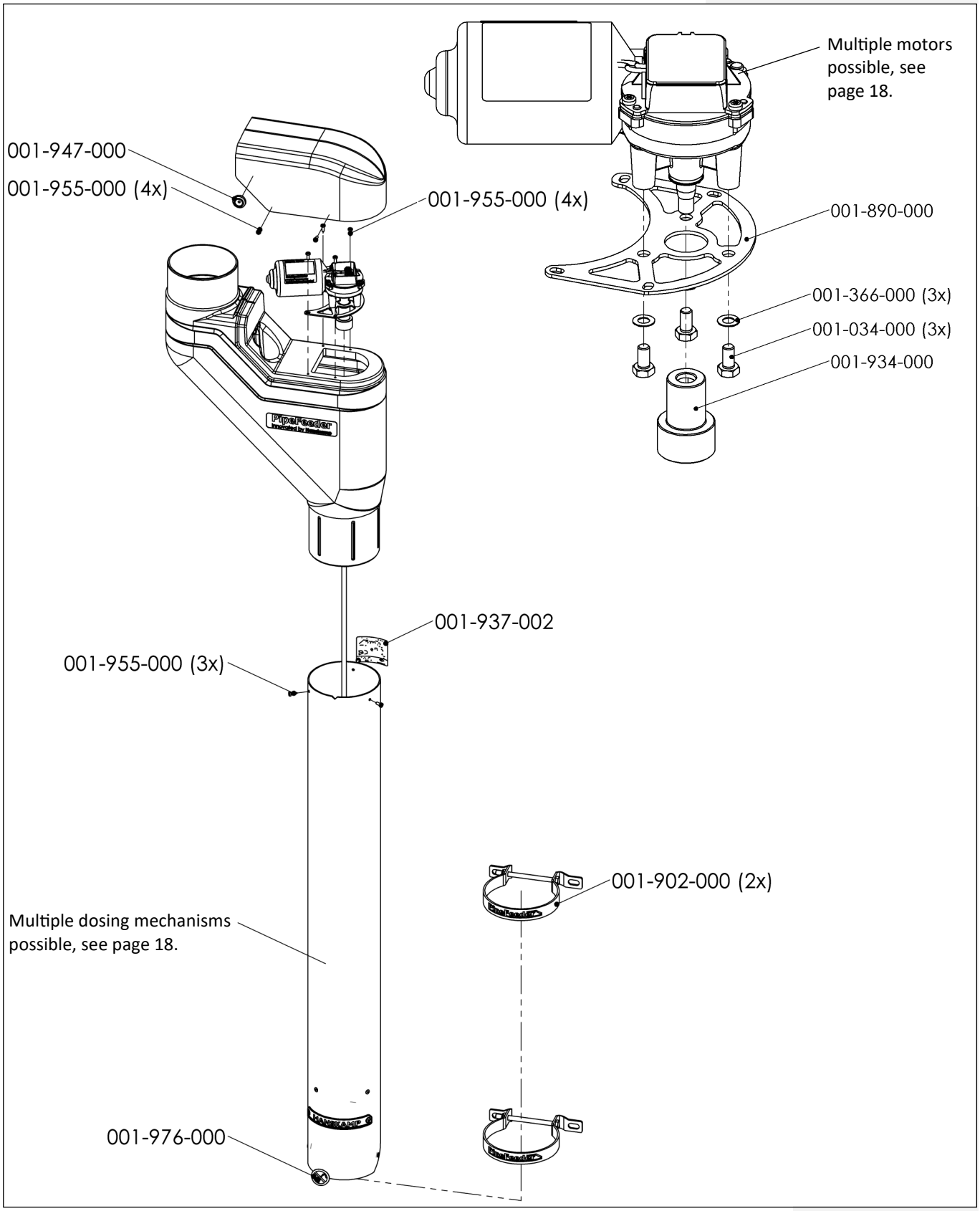

Appendix - Description of the components

Parts description		
Article number	**Description**	**Quantity**
001-034-000	Tap bolt M6 x 12 A2 DIN 933	3
001-366-000	Spring wave washer M6 A2 DIN 137B	3
001-890-000	Motor plate for DC motor	1
001-902-000	Wall mounting bracket Ø129 complete	2
001-934-000	Connector DC motor	1
001-947-000	Membrane grommet thermo-plastic elastomer	1
001-955-000	Chipboard screw 4 x 13 A2	11
001-976-000	Ban sticker	1

Plastic element		
Article number	**Description**	**Quantity**
001-903-001	MDPE plastic element 45° with lid, green	1
001-904-001	MDPE plastic element 45° with lid, black	1
001-924-001	MDPE plastic element 45° with lid, blue	1
001-925-001	MDPE plastic element 45° with lid, red	1
002-024-001	MDPE plastic element 45° with lid, orange	1

Tubes incl. dosing mechanisms			
Article number	**Description**		**Quantity**
026 - Grit (10 grams)			
026-001-000	Extra short	370mm	1
026-011-000	Short	690mm	1
026-021-000	Normal	990mm	1
026-031-000	Long	1475mm	1
227 - (50 grams)			
127-000-021	Extra short	370mm	1
127-010-021	Short	690mm	1
127-020-021	Normal	990mm	1
127-030-021	Long	1475mm	1
228 - (35 grams)			
128-000-021	Extra short	370mm	1
128-010-021	Short	690mm	1
128-020-021	Normal	990mm	1
128-030-021	Long	1475mm	1

Motor				
PipeFeeder number	**Article number**	**Description**	**Maintenance info Article number**	**Quantity**
***2*-**2-0*0**	**011-095-000**	RIM motor 28 rpm 24VAC with feedback, time-controlled	010-225-0**	1
***2*-**3-0*0**	**011-125-000**	RIM motor 28 rpm 24V AC/DC with feedback, pulse-controlled	010-225-0*5	1
***2*-**4-0*0**	**001-652-000**	Intelligent Motor 28 rpm	010-086-000	1
***2*-**4-2*0**	**001-652-1****	Intelligent Motor 28 rpm dispense over milking time	010-247-000	1
***2*-**5-0*0**	**001-440-000**	Motor grey, 41 rpm without cable	011-133-000	1
***2*-**6-0*0**	**011-021-000**	Motor SolidState 5, 28 rpm	011-027-000	1
***2*-**8-0*0**	**001-001-000**	Dosing motor, grey, 41 rpm with cable	011-027-000	1

Appendix 5 - Installation dimensions

Long version - 1926 mm
26 l - 16.6 Kg

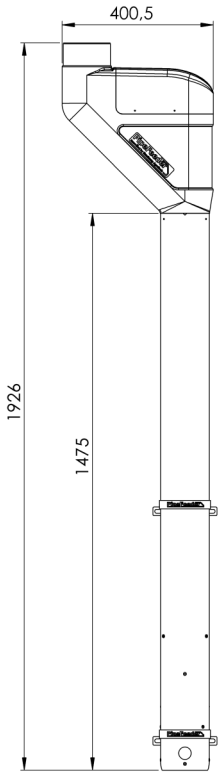

Normal version - 1440 mm
20 l - 12 Kg

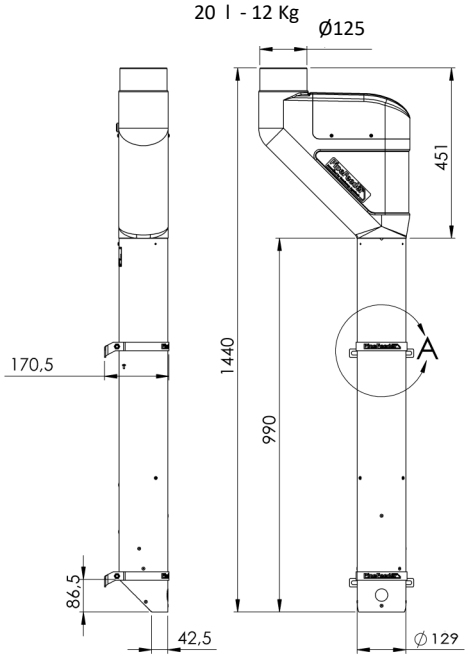

Short version - 1141 mm
16 l - 9.6 Kg

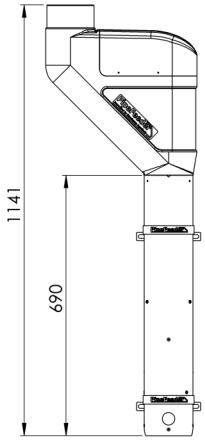

Extra short version - 821 mm
11.4 l - 6.8 Kg

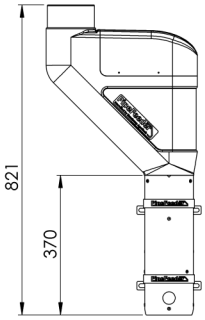

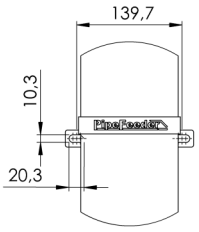

DETAIL A
SCALE 1 : 5

Also available:
Extra long version - 2411 mm
32 l - 19.2 Kg

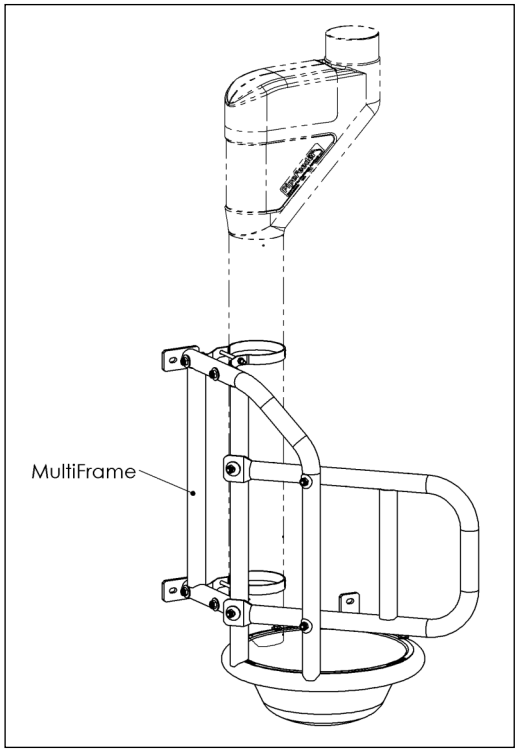

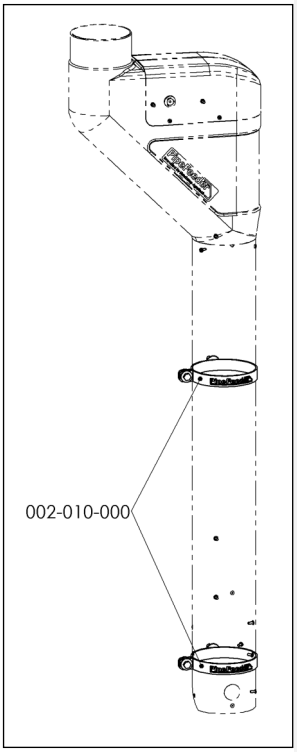

Hanskamp AgroTech BV
Xenonstraat 6
7031 HX Wehl
The Netherlands
Tel: +31 (0)314 - 393 797
www.hanskamp.com

Stay up to date: