MultiDos 035-000-000
036-000-000

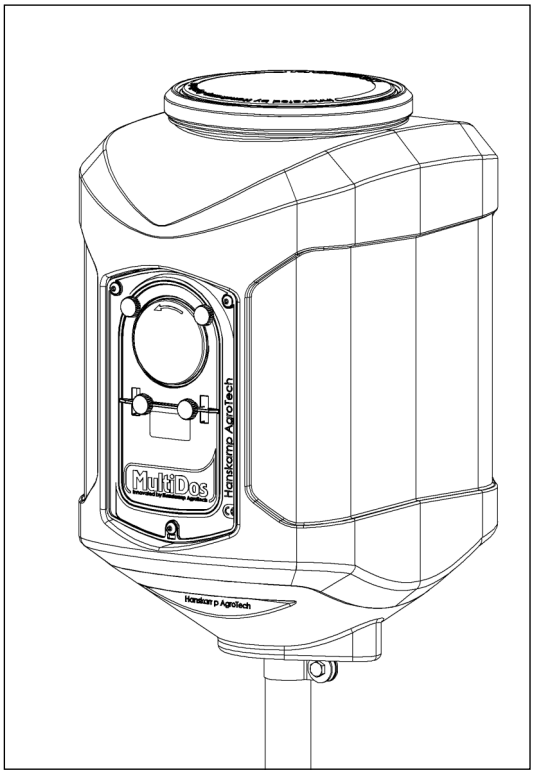

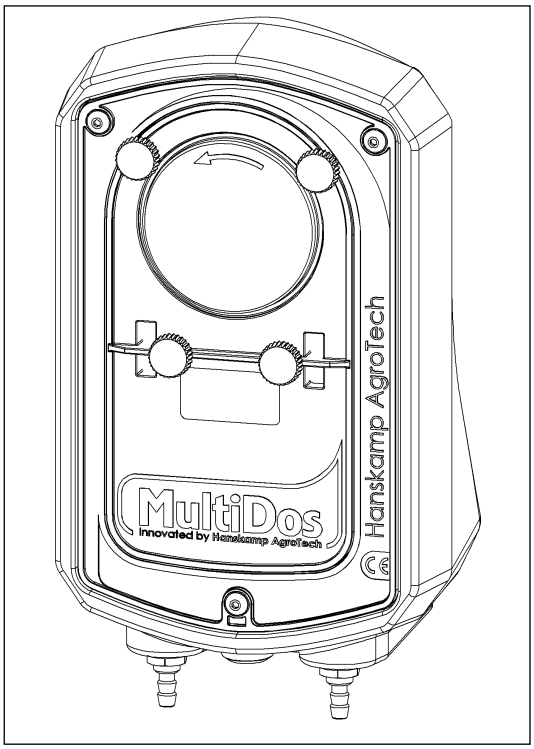

Vloeistofdoseersysteem
Liquid dosing system
Flüssigkeitsdosiersystem
Système de dosage pour liquide

Installation and Operating Instructions **EN**

HANSKAMP
Innovation for dairy farming

Article number: 010-100-000

Date: April 2026
Version: 2.4 - Translation of original Installation and Operating Instructions
According to Annex 1 Section 1.7.4 of the Machinery Directive 2006/42/EC

Wehl,
The Netherlands
www.hanskamp.com

Foreword

Contents of the installation and operating instructions

This manual contains the information necessary for the correct installation and operation of a Hanskamp MultiDos. Please read this information carefully, and make sure you understand everything before configuring the MultiDos. Failure to do so could result in damage to equipment. Please contact Hanskamp if the information is not clear to you, or if you need more information.

All the information in this manual was compiled with care. Hanskamp is not liable for any errors or shortcomings in this manual. The recommendations are intended as guidelines. All instructions, illustrations, and specifications in this manual are based on the latest information available at the time of publication. Your MultiDos may have improvements, features, or options that are not covered in this manual.

Applicability

The table below shows the type numbers of the MultiDos for which this manual is applicable.

Model designation

Model	Type number	
MultiDos in container (AC &DC)	035-001-000 035-002-000 036-001-000 036-002-000	Page 8 to 12
MultiDos wall mount (AC&DC)	035-003-000 036-003-000	Page 13 to 17

Contact details of the milking technology dealer

We recommend that you enter the name, phone number and e-mail of your milking technology dealer in the table below, so that you can always find the right information easily.

Name	
Address	
Phone number	
E-mail	

1. Introduction

The MultiDos from Hanskamp is a piece of proven, sustainable technology that makes dosing the right amount of liquid additive per day and per cow very simple. It is a smart, fast, and affordable solution. MultiDos doses liquid concentrates over feed as if it were gravy, and cows love it.

The information in this manual is intended for dairy farmers and technicians.

- Dairy farmers can use the information to test and adjust the MultiDos.
- Technicians can use the information to install and set up the MultiDos.

2. Safety

2.1 Introduction

The 'Safety Warning' symbol warns about important safety messages on your MultiDos and in the manual. Use caution if you see this symbol; it means there is a risk of personal injury or death. Follow the directions of any safety messages.



Safety Warning Symbol

2.2 Warning Texts

Note the use of the warnings **CAUTION** and **DANGER** in the safety messages. The following guidelines apply to these warnings:



Caution! Indicates a potentially hazardous situation which could result in minor personal injury or damage to equipment or the environment if the warning is ignored.



Danger! Indicates a potentially hazardous situation which could result in death or serious injury if ignored.

2.3 Safety Instructions

You are personally responsible for operating and maintaining your MultiDos safely. You must make sure that you and anyone else who operates the equipment, performs maintenance on the MultiDos or works in the vicinity of the MultiDos, are familiar with all the safety information in this manual.

Safety is in your hands. Proper safety measures protect you and the people around you. Incorporate these measures into your safety programme. Make sure that everyone who uses, carries out maintenance, or works in the vicinity of the MultiDos is aware of these safety measures. Do not risk injury or death by ignoring the safety precautions.

- MultiDos owners must train users before the MultiDos is used. This training must be repeated at least once a year.
- The user must read, understand and follow all the safety and operating instructions in the manual.
- Anybody who has not read and understood all the safety and operating instructions must not operate the MultiDos.
- Do not make any modifications to the equipment. Unauthorised modifications may affect operation, affect the service life of the equipment, and/or result in personal injury.
- Only use original spare parts, and make sure that they are fitted by authorised technicians.

2.3.1 General safety

- Make sure that you have read and understood the manual and the safety instructions before connecting the power supply to operate or adjust the MultiDos, or turning it off for maintenance.
- Only trained persons may operate the MultiDos.
- A first-aid kit must be available near the MultiDos. Store it in a highly visible place.
- A carbon dioxide or foam fire extinguisher must be available near the Multi-Dos. Store it the fire extinguisher in a highly visible place.
- Install all guards and safety devices before using the MultiDos.
- Always wear appropriate personal protective equipment (PPE).
- Before cleaning the MultiDos or performing maintenance on it, switch off the power supply of the MultiDos by removing the plug from the socket.
- Make sure that the phone numbers of emergency medical care available in your area are at hand.
- If you have any other questions, please contact your milking technology dealer.
- Review all safety-related topics with all users at least once a year.

2.3.2 Electrical safety

- Only a qualified electrician may install the MultiDos power supply.
- Check whether the earthing of the electrical system and all parts of the MultiDos comply with local rules and regulations.
- Replace any damaged electrical lines, conduits, switches and components immediately.
- Isolate the electrical power supply before you open the MultiDos to work on the electrical system.

2.3.3 Safety during installation

- Make sure that you have read and understood the instructions in this manual.
- Check whether the MultiDos has been installed correctly, as described in the manual.

2.3.4 Safe operation

- Make sure that you have read and understood the manual and the safety instructions before connecting the power supply to operate or adjust the MultiDos, or turning it off for maintenance.
- Only trained personnel may operate the MultiDos.
- Before cleaning the MultiDos or performing maintenance on it, switch off the power supply of the MultiDos by removing the plug from the socket.
- Install the lid and other safety devices before using the MultiDos.
- Keep hands, feet, hair and clothing away from live parts.
- Keep all unauthorised persons, especially small children, away from the MultiDos at all times.
- Before connecting the MultiDos to the power supply, make sure that all parts are properly tightened and that all cables and mountings are in good condition.
- If you have any other questions, please contact your milking technology dealer.

2.3.5 Maintenance safety

- Make sure that you have read and understood the manual and the safety instructions before connecting the power supply to operate or adjust the MultiDos, or turning it off for maintenance.
- Only trained personnel may service and maintain the MultiDos.
- Before cleaning the MultiDos or performing maintenance on it, switch off the power supply of the MultiDos by removing the plug from the socket.
- Wear protective clothing and safety glasses when working on the electrical system.
- Make sure all guards and safety devices are installed when you have finished maintenance work.

2.3.6 Safety messages

- This chapter lists the general safety messages. Specific safety messages, where potential hazards may arise if the procedures or instructions are not followed, are included in the appropriate sections of this manual.

3. Installation and Operating Instructions

General description

The Hanskamp MultiDos dosing system is a liquid dosing system. The MultiDos is suitable for fluids with a low viscosity like glycerine, propylene glycol, Tirsana or KetoProtect, which are based on water or oil. The MultiDos is not suitable for fluids with a high viscosity. The MultiDos can be connected to any general feeding system, just like the PipeFeeder and other Hanskamp dosators.

This instruction will help you install the MultiDos system (fig. 1). Read this instruction carefully and follow the safety instructions. Examples of installation can be found at **www.hanskamp.com**.

Order numbers and names of accessories can be found in the attachment.

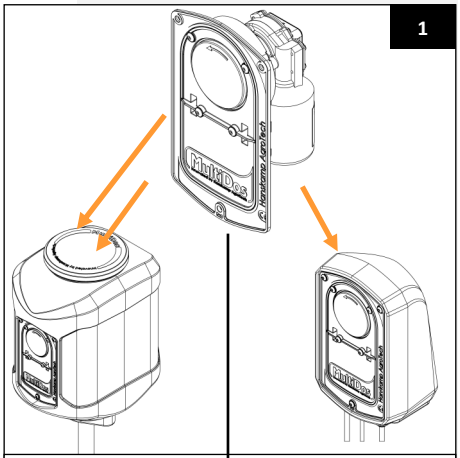

Page 8 to 12 | Page 13 to 17

Transport and storage

A complete MultiDos system set consists of a MultiDos wall mount or a MultiDos container, including 1 or 2 MultiDos pumps. The container and/or wall mount will be sent in a box. These boxes can be put on top of each other on a pallet. The MultiDos system can also be sent in a box.

Caution! Always move the pallet using a suitable means of transport (forklift, pallet fork, pallet truck, etc.).

Caution! When unpacking the pallet, parts may fall from it.

Safety

The user and installer are responsible for operating and maintaining the MultiDos safely. In case of changing the Hanskamp Quality Tube of the pump (art. no. 003-512-00*), always disconnect the electrical system.

Type designation; can be found on the pump housing

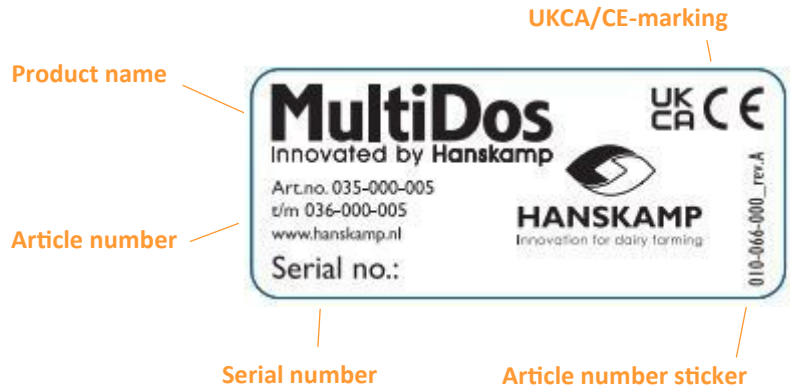

Caution: the stickers present may not be removed!

Maintaining stickers

- Keep safety stickers clean and legible.
- Clean safety stickers with water and soap.
- Do not use solvents or abrasives that could damage safety stickers.
- Replace missing or illegible safety labels immediately.
- Safety stickers are available from Hanskamp. Always use the article numbers in correspondence.

Mounting of container version

Look for the assembly of the wall-bracket version at page 13.

This manual contains the information for the installation of one pump unit. When you have two pump units, use exactly the same information to mount the second pump at the other side of the container.

With 2 pumps: Also drill a hole Ø13 on the other side of the container (fig. 3). Afterwards attach the extra supplied feed-through coupling (art. no. 003-572-000) in the hole and secure this with a coupling nut (art. no. 001-886-000).

1. Check the parts list to ensure all components are present (p. 29).

Caution! No fixing materials are supplied to mount a mounting pipe to the feed station.

2. Attach the mounting pipe (art. no. 003-521-000) 1¼" (Ø 42.4) to a feed station or another feeding system.
3. Place the MultiDos container over the mounting pipe (fig. 2).
4. Slide the fixing band (art. no. 003-538-000) over the mounting pipe until it touches the container. Secure the fixing band so that the container can no longer rotate (fig. 4).

Caution! Be aware of potential pinch hazards when mounting the mounting pipe.

Caution! If the container rotates easily on the pipe, it must be secured. If the container can rotate multiple times, this may negatively affect operation.

5. Loosen and remove the three external socket head screws (art. no. 003-510-000) securing the MultiDos pump and remove the pump (fig. 5).

1x pump hose Ø11.5 (HanskampQualityTube) (art. no. 003-512-000*)
1x suction hose = 20 centimetres (PVC hose Ø10×7) (art. no. 003-575-000)
1x pressure hose = 5 metres (PVC hose Ø10×7) (art. no. 001-006-005)

6. Take the 5-metre PVC hose and cut it to size. This will be the pressure hose to the nozzle.
7. Insert the pressure hose (art. no. 001-006-005) through the hole in the container and through the mounting pipe (figs. 6A and 6B). This hose goes to the nozzle.

Caution! When feeding or installing the hose through the mounting pipe, minor injuries may occur due to sharp edges.

Caution! Ensure that the PVC hose retains its shape during installation. Do not overtighten the cable ties to avoid pinching the hose.

8. For nozzle installation, see page 22.

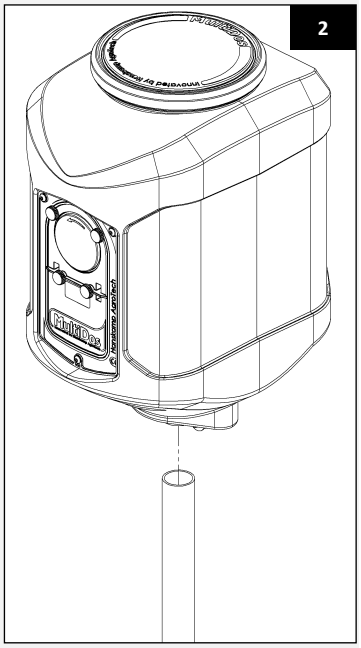

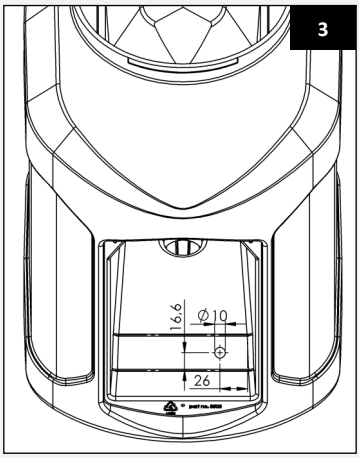

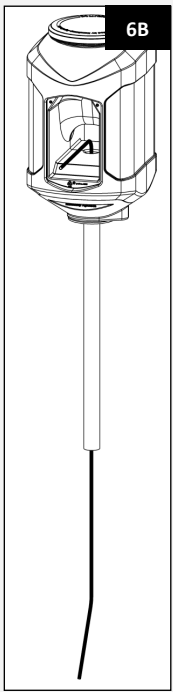

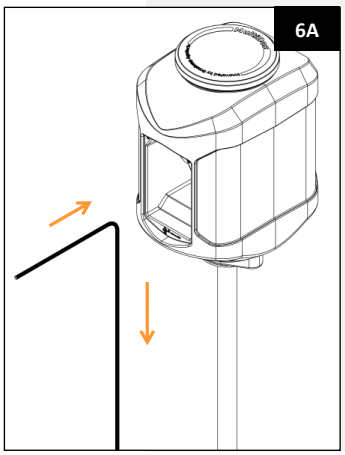

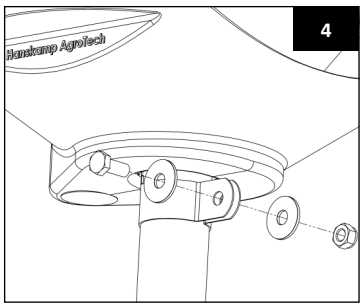

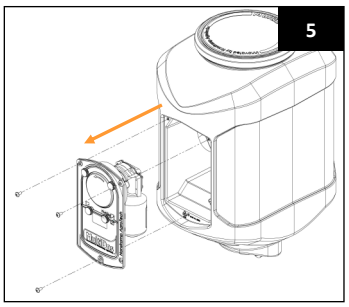

9. Take the existing pressure hose and pull it through the rear wall of the pump housing to the front.
10. Install the feed-through coupling (art. no. 003-572-000) into the container and onto the pressure hose, as shown in fig. 7.
11. Then install the suction hose (art. no. 003-575-000) onto the feed-through coupling, as shown in fig. 8.
12. Take the pump, remove the four knurled bolts (art. no. 003-509-001), and remove the transparent cover (art. no. 003-502-000) from the pump housing (art. no. 003-501-000) (fig. 9).
13. Take the pump housing with the electric motor attached to the pump. Push the end of the electrical cable of the motor through the hole in the container where the discharge hose also passes through (fig. 10).
14. Place the pump housing into the container, ensuring that the cable and the pressure hose are not pinched.
15. Tighten the pump housing evenly by hand using the corresponding screws (art. no. 003-510-000).

Caution! The HanskampQualityTube is not suitable for acids. A suitable hose kit for acids can be ordered from Hanskamp on request.

7

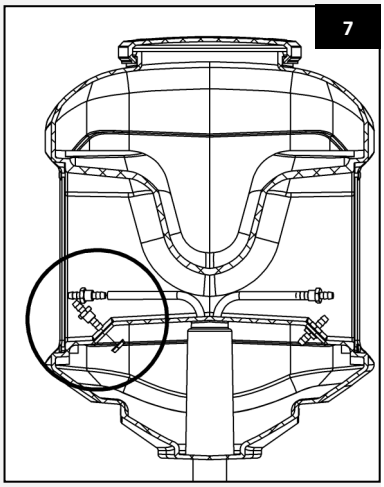

8

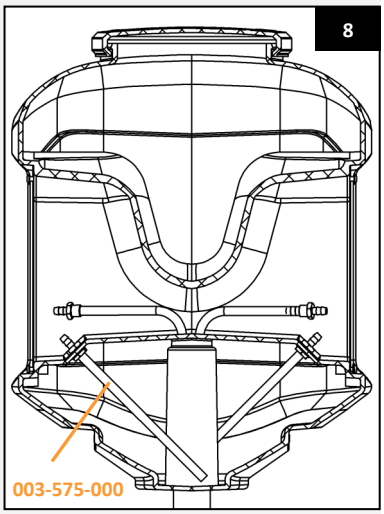

9

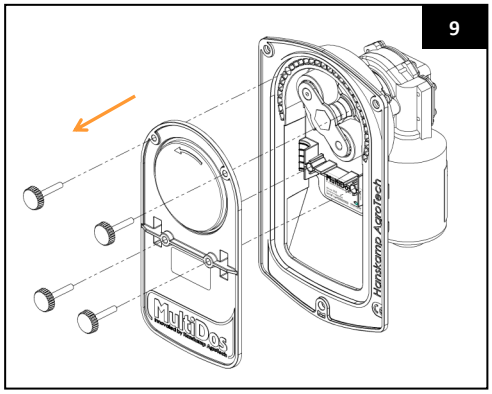

10

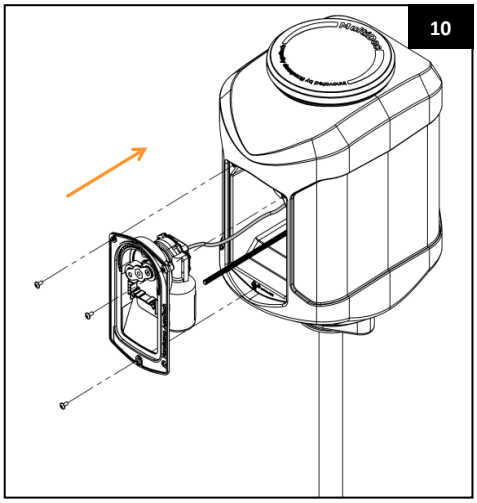

11

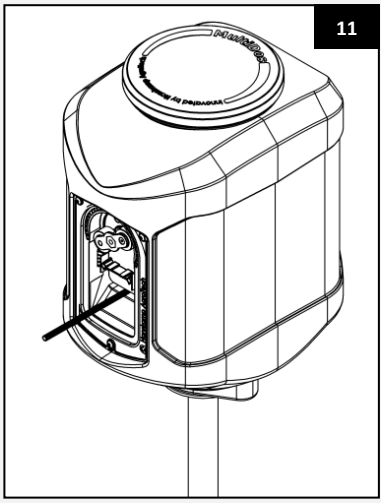

16. Take the pressure hose, the HanskampQualityTube (located inside the pump), and one feed-through coupling (art. no. 003-572-000). Install these as shown in figures 12 and 13.

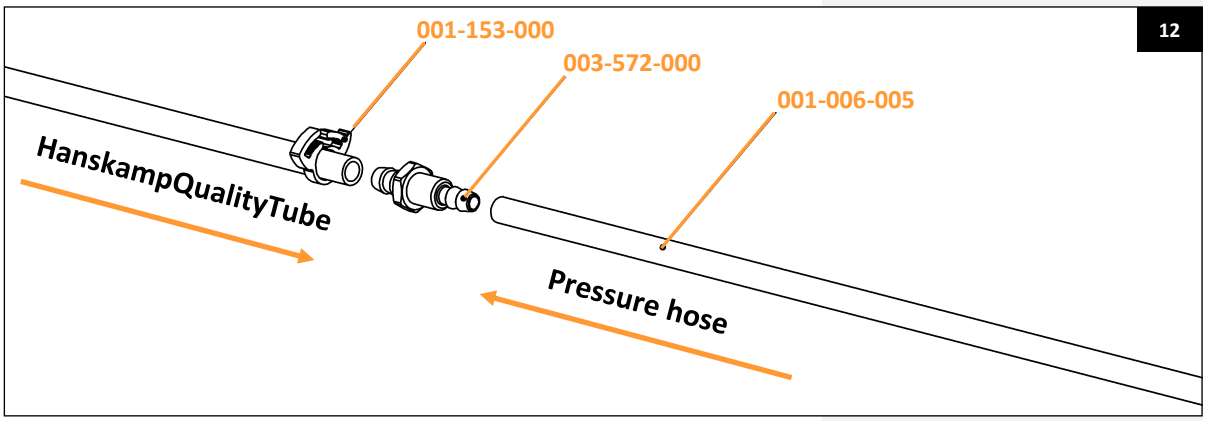

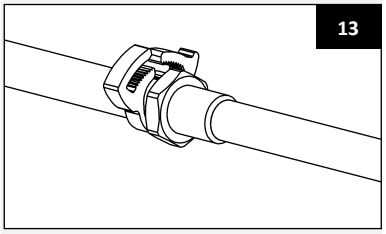

Caution! When installing the hoses, there is a risk of minor pinching

Caution! Always cut the hose straight. If the hose is cut at an angle, this may negatively affect performance.

17. Turn the pump rotor by hand anticlockwise to loosen it and remove it (fig. 14).

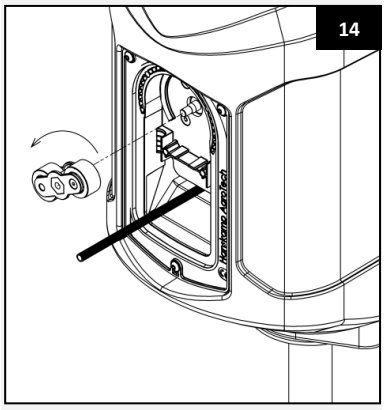

Caution! Turning the rotor by hand may result in minor injuries.

18. Bend the HanskampQualityTube and slide it over the feed-through coupling protruding from the pump housing (fig. 15).
19. Take the HanskampQualityTube and bend it as much as possible into the shape of the pump housing. Ensure that the pressure hose is pushed as far back as possible into the mounting pipe (fig. 17).
20. Take the rotor and place the side with the conical recess onto the shaft of the pump motor. During the final rotation, press the HanskampQualityTube firmly into the recess of the pump housing. The hose is now clamped between the rollers and the pump housing. Tighten the rotor onto the motor shaft by hand (figs. 18 and 19).

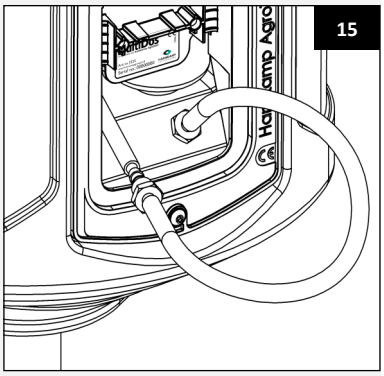

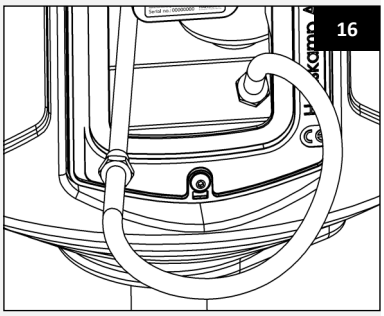

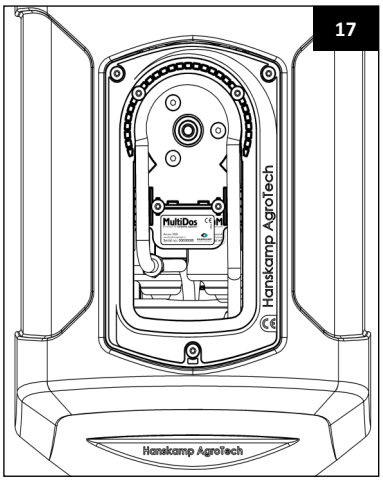

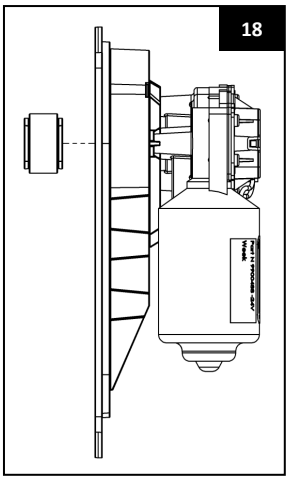

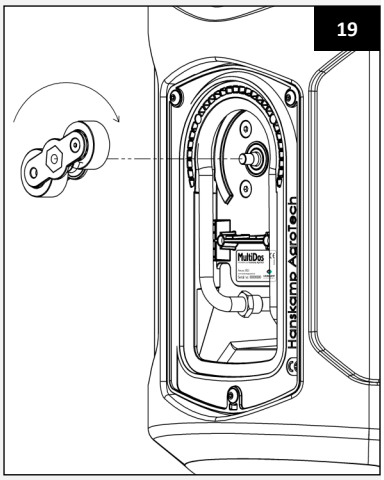

Caution! The hose must be pressed as closely and neatly as possible into the curve of the pump housing (fig. 20).

21. Take the transparent pump cover (art. no. 003-502-000) together with the four corresponding knurled bolts (art. no. 003-509-001). Position the cover so that it aligns correctly with the cover recess in the pump housing. Tighten the bolts evenly until the cover is securely fixed in place (fig. 21).
    Attention: hand-tight is sufficient.
22. Disconnect the control board of the feed station from the power supply before connecting the motor cable. Connect the motor of the MultiDos to the control board of the feed station.

Caution! When connecting the motor to the control board, minor electric shocks may occur.

23. Always install the cover to prevent dirt from entering the storage container.
24. For a single pump unit: install a stainless steel blanking plate on the opposite side of the container. Secure it using the supplied hex socket screws (art. no. 003-545-000) (fig. 23).

20

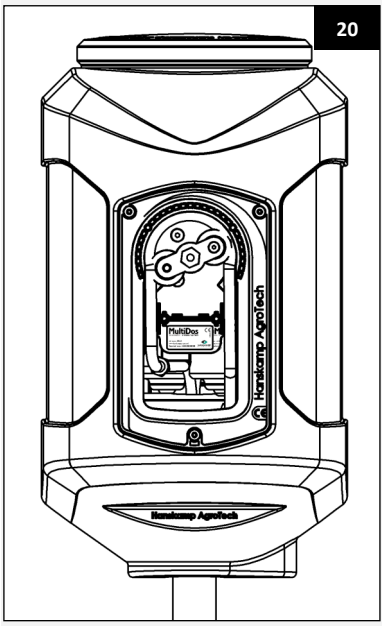

21

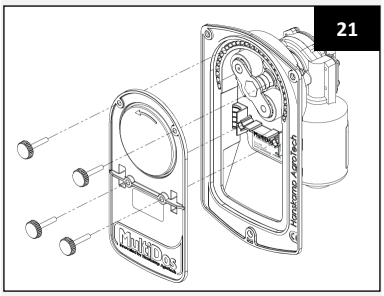

Maintenance

Inspect the MultiDos system daily for faults and wear. This can be done by visually checking the inlet and outlet hoses and the electrical wiring. Periodically check the dosing volume and recalibrate if necessary. When the HanskampQualityTube becomes worn due to intensive use (for example, leakage), it must be replaced according to the prescribed procedure. A refurbishment kit is available from Hanskamp. Also inspect the rollers and bearings for wear. These components are likewise available in a refurbishment kit from Hanskamp.

Caution! Replace the pump hose annually, or once it has pumped 1,000 litres.

Calibration

For calibration, manually activate the motor until liquid emerges from the nozzle.

Caution! During the first rotations, nothing may be visible yet, as the rotor is tightening onto the motor shaft.

Calibration of the MultiDos is carried out by letting the feed computer send ten pulses. Then measure the dispensed volume and divide it by ten. Enter this value into the feed computer. Repeat this procedure monthly and also after any change of liquid. This is one method of calibration. If the calibration method described in the manual of your feed computer differs, that method must be applied for the MultiDos.

22

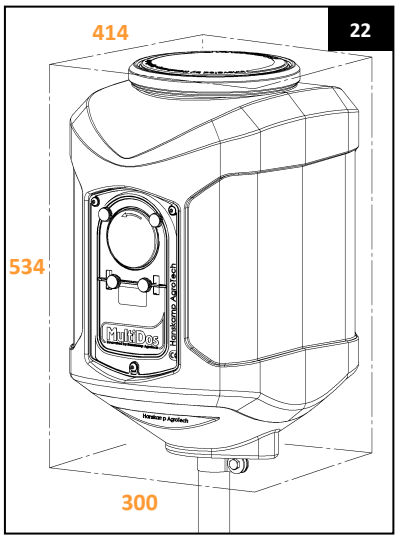

23

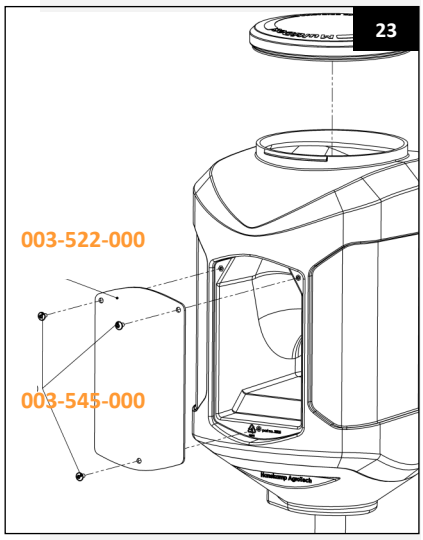

Wall-mounted installation version

1. Check the parts list to ensure all components are present.
2. Loosen the outer 3 socket head screws (art. no. 003-510-000) securing the Multi-Dos pump and remove the pump.

Caution! Position the housing at a maximum of 2 metres from the bottom of the storage tank.

The MultiDos can be mounted in two different ways.

3a. **Wall mounting**
Install the supplied DIN rail vertically on the wall. Fixing materials are not included. Then slide the wall bracket from above onto the DIN rail (fig. 26).

3b. **Surface mounting**
Drill holes in the underside of the MultiDos. The position of the holes can be determined as required. The minimum distance between the hoses and the mounting plate is shown in figure 27. Then secure the wall bracket in place. Fixings are not included.

24

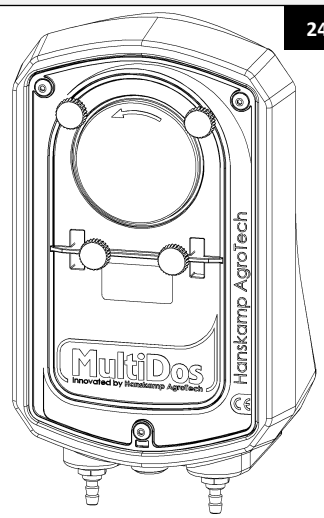

25.1

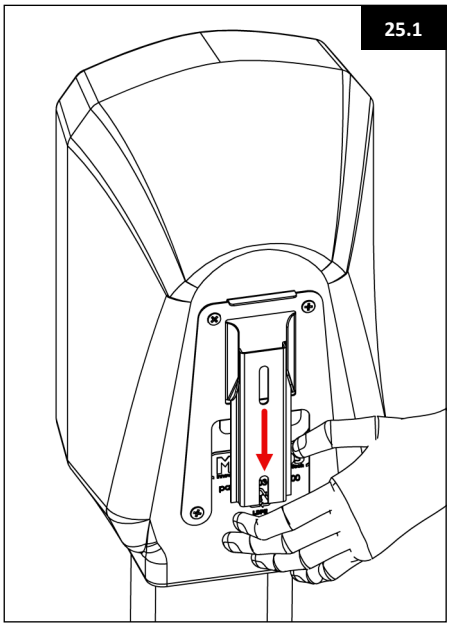

25.2

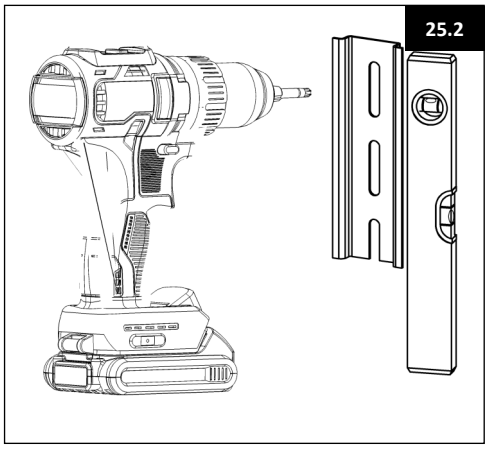

26

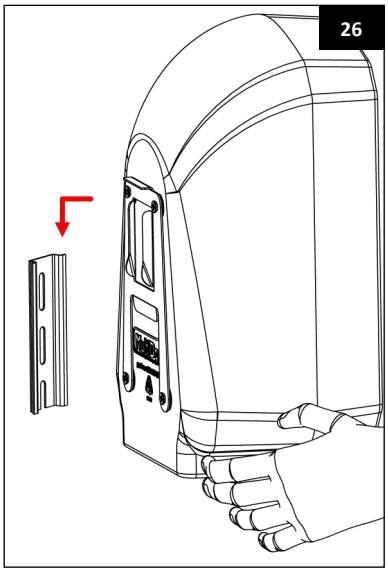

27

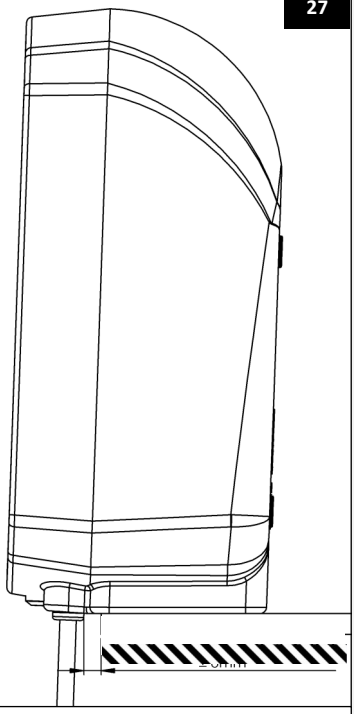

Distance between the tube and the plate: ± 8mm

4. Unscrew the cover of the pump housing.
5. Make a hole in the central grommet using a small flat-head screwdriver. Push the motor cable through this opening. This cable is connected to the corresponding control unit. For correct installation, refer to the installation instructions of the respective control unit. Do this only once the entire installation has been completed.
6. Install the feed-through coupling (art. no. 003-572-000) in the two outer holes of the wall bracket and secure it with a locknut (art. no. 001-886-000), as shown in figure 29.
7. Secure the pump housing to the wall bracket by tightening the corresponding screws (art. no. 003-510-000) evenly by hand.
8. Turn the pump rotor anticlockwise by hand to loosen it and remove it.

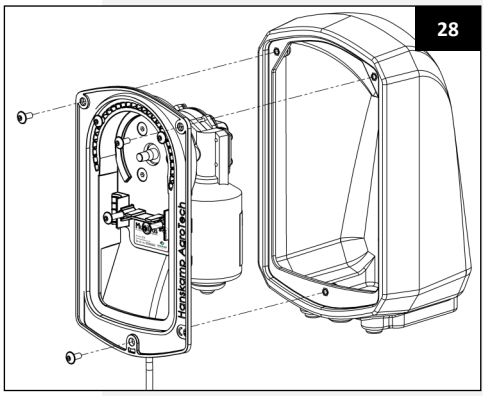

Caution! Turning the rotor by hand may cause minor hand injuries.

Caution! Hanskamp only guarantees correct operation when the suction hose is 2 metres or shorter. Use the 5-metre PVC hose as the pressure hose.

Caution! The HanskampQualityTube is not suitable for acids. A suitable hose kit for acids can be ordered from Hanskamp on request.

Caution! Always cut the hose straight. If the hose is cut at an angle, this may negatively affect performance.

Caution! Ensure that the end of the hose is fully positioned at the bottom of the storage tank, otherwise the pump cannot pump out all liquid.

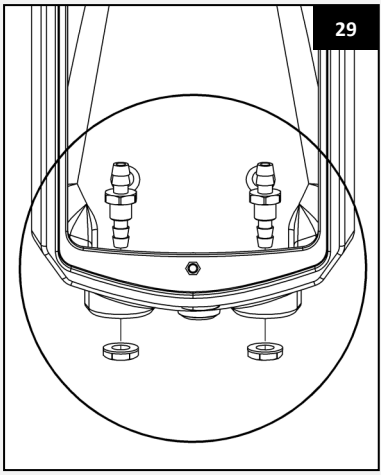

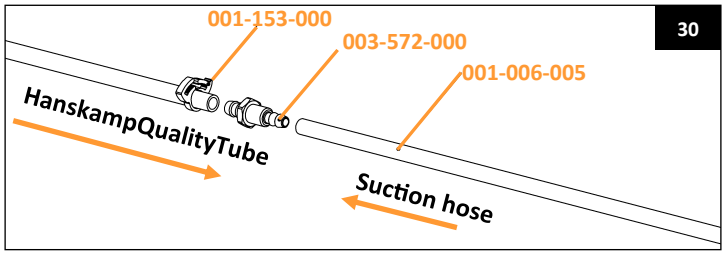

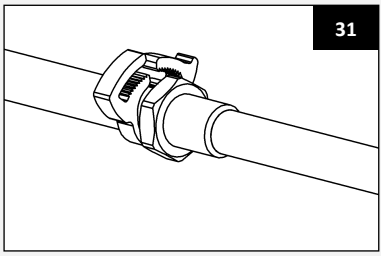

9. Take the right-hand side of the HanskampQualityTube and slide it onto the feed-through coupling (art. no. 003-572-000) (fig. 30).
10. Bend the HanskampQualityTube into a loop and slide it over the left feed-through coupling (fig. 32).
11. Then slide the suction hose onto the right feed-through coupling.
12. Repeat this with the pressure hose on the left side.
13. Take the HanskampQualityTube and shape it as closely as possible to the form of the pump housing (fig. 34).

Caution! Always cut the hose straight. If the hose is cut at an angle, this may negatively affect performance.

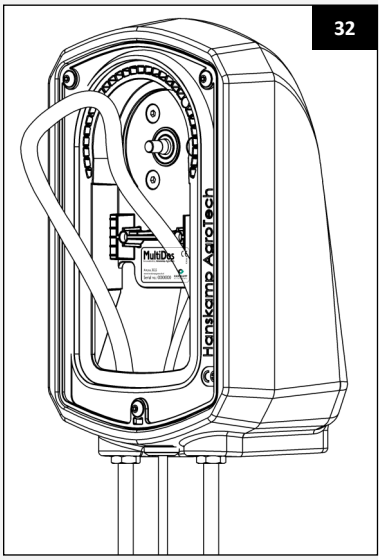

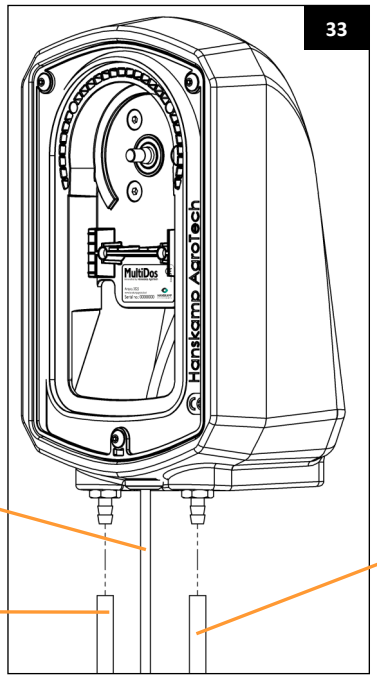

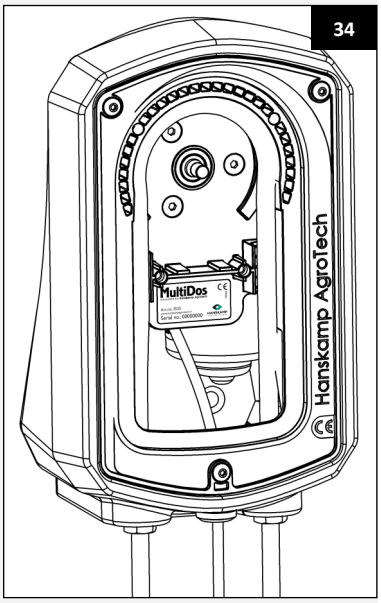

14. Take the rotor and position it with the side of the conical recess onto the shaft of the pump motor. During the final turn, press the HanskampQualityTube firmly into the recess of the pump housing. The HanskampQualityTube is now clamped between the rollers and the pump housing. Then tighten the rotor by hand onto the motor shaft (figs. 35 and 36).

Caution! The hose must be pressed as well as possible into the curve of the pump housing (fig. 36).

15. Take the transparent pump cover (art. no. 003-502-000) together with the four associated knurling bolts (art. no. 003-509-001). Position the cover so that it is correctly aligned with the cover recess in the pump housing. Tighten the screws evenly until the cover is securely fixed (figs. 37 and 38). Attention: tight is tight!
16. Disconnect the control board of the feed station from the power supply before connecting the motor cable. Then connect the motor of the MultiDos to the control board of the feed station.

Caution! When connecting the motor to the control board, minor electric shocks may occur.

Maintenance

Check the MultiDos system daily for faults and wear. This can be done by visual inspection of the inlet and outlet hoses and the electrical wiring. Periodically check the dosing output and recalibrate if necessary. When the HanskampQualityTube is worn due to intensive use (leaking), replace it according to the prescribed steps. A refurbishment kit is available from Hanskamp. Also check the rollers and bearings for wear. These components are also available as a refurbishment kit from Hanskamp. We recommend disconnecting the rotor when the system is temporarily out of operation.

Caution! Replace the pump hose annually, or once it has pumped 1,000 litres.

Calibration

For calibration, manually activate the motor until liquid emerges from the nozzle.

Caution! During the first rotations, nothing may be visible yet, as the rotor first tightens onto the motor shaft.

The MultiDos is calibrated by letting the feed computer send ten pulses. Then measure the dispensed volume and divide it by ten. Enter this value into the feed computer. Repeat this procedure monthly and also after any change of liquid. Liquid feed is distributed simultaneously with regular concentrate feed over the entire active period of the day. For the use of a feeding curve, refer to the manual of your feed computer. This is one possible calibration method. If the calibration method described in the manual of your feed computer differs, that method must be applied for the MultiDos.

Caution! The pump hose performs optimally after a one-week run-in period. Therefore recalibrate after one week.

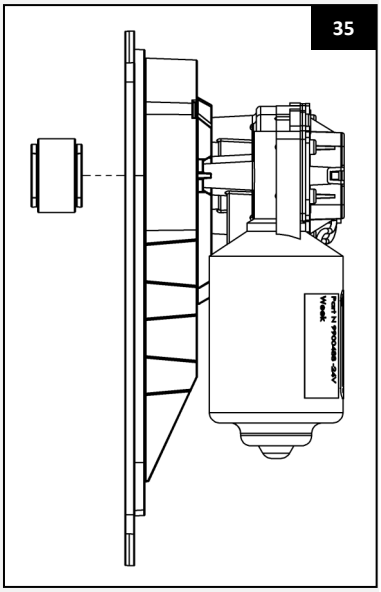
35

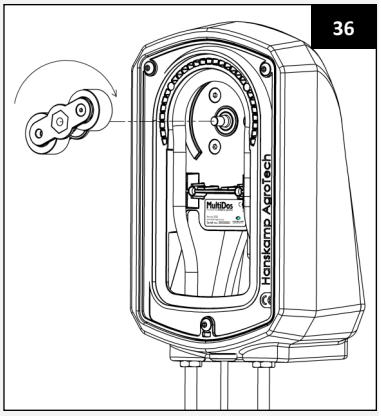

36

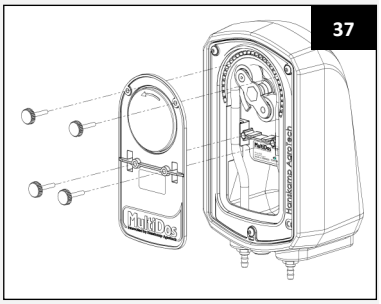

37

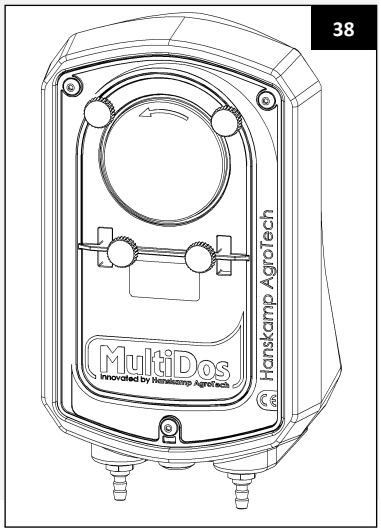

38

Feed computer settings (example)
Nedap: (011-021-000 [360°] or 001-669-000 [120°] motor SolidState5)
Enter the following parameters into the feed computer:

- Portion size: 30 (This corresponds to a 3 cc pulse volume of the MultiDos.)
- Interval time / dispensing rate: 5 sec / 0.6 kg/min

Minimum and maximum feed amount per interval/period: Set these in the same ratio as feed types 1 and 2. Do not use identical values, but maintain the ratio between concentrate feed and liquid concentrate feed.

ATTENTION: calculation example is based on 001-669-000 [120°] SS5 engine, with a 011-021-000 [360°] SS5 engine this can be tripled.

Setting a liquid additive is carried out in the same way as setting concentrate feed. The only difference is that the dosing weight for the liquid additive is one tenth of the programmed weight.

Example

- Programmed feed 3: 0.1 kg corresponds to 10 cc liquid additive.
- Programmed feed 3: 1.0 kg corresponds to 100 cc liquid additive.

Feed computer
Gascoigne Melotte (011-038-000 motor 24V AC 10 rpm time-controlled)
GM 3000

1. Liquid additive is entered as an additional feed type in the GM3000.
2. Enter the feed name 'MultiDos' in the processor.
3. Set dosing rate to 1.6 g/sec.
4. Minimum run time: 2 sec.
5. Calibration value: 60 sec.
6. Run-on time: Not applicable.
7. If the process computer cannot work with 1/100 kg, multiply the calibration values and feed amounts by 10. See explanation after point 4 under 'BouMatic'.

Gascoigne Melotte (011-038-000 motor 24V AC 10 rpm time-controlled)
ID 2000(+) and MR2000(+)
Key settings
Change the following setting:

06 [enter]: Concentrate ?	Yes
07 [enter]: Scale factor	1
08 [enter]: Min. dispense	3 gram
10 [enter]: Intake rate	10.9 g/sec.

Press the space bar. The main menu will appear.
Type 16 [enter]: Exit, to leave the ID2000 programme. The ID/MR2000 1.13 menu appears.

WARNING! If the scale factor is changed, all data in all connected ID2000 control units must be erased. All animal data must be re-entered.

Feed station data
Change the following settings:

09 [enter]: Auger?	Yes
10 [enter]: Feed dispense	10.00 g/sec.
11 [enter]: Auger stop time	131 msec.

All other feed types:

01 [enter]: Auger?	Yes

Press the 'Up arrow' key to select feed station 2. Repeat the steps from chapter 3 for all other feed stations, or choose 7 [enter]: Batch input to modify the settings of a batch of selected feed stations. Press the space bar and type 16 [enter]: Exit.

DeLaval ALPRO/DELPRO (Motor 011-095-000 AC 28 rpm with feedback)
Menu 2.1 or menu 2.6

In FP204
Menu 2 (F9)

Expected calibration quantity
0.096 kg = ± 96 ml liquid additive after calibration (8 ml × 30 sec (12 revolutions))

Calibration
See 'DeLaval ALPRO/Feeding System Manual'.

In FP204
Menu 4:1
See: User Manual DeLaval FP204 Feeding System.

BouMatic 115V AC (001-436-000 bare motor 10 rpm)
1. Liquid additive is entered as an additional feed type in the processor.
2. Set the intake rate of this feed type as high as possible.
3. Calibration depends on the calibration test.
4. If the process computer cannot work with 1/100 kg, multiply the calibration values and feed amounts by 10

Setting a liquid additive is done in the same way as setting normal concentrate feed. If calibration has been multiplied by 10, this factor must also be taken into account in the settings.

Example
- Feed type 3 set to 1 kg is equal to 100 ml liquid additive.

Caution! When carrying out maintenance and/or disassembly, always disconnect the electrical power supply to the pump motor first. Ensure that any storage tank present is empty, otherwise there is a risk of minor electric shock.

Disassembly

During disassembly, all components must be separated by material type and disposed of correctly in the appropriate waste processing cycle.

Caution! During disassembly there is a risk of pinch injuries. There is also a risk of minor hand injuries when reaching into the roller mechanism.

During operation

Caution! When cleaning hoses (flushing) and when reaching into the roller mechanism by hand, there is a risk of minor hand injuries. If the motor is uncovered (no protective cover fitted), there is a risk of minor electric shock.

Overview of changes included in this installation and operating manual

No.	Release date	Chapter(s)	Notes
1	08/2014		First edition
1.1	10/2014	All	Technical improvements implemented
1.2	12/2014	Configuration	Configuration for multiple feed computers
1.3	01/2015	Article structure	Update + 36000 number
1.4	09/2015	All	General review
1.5	09/2015	Appendix 1	Use only 3518 spray nozzle
1.6	01/2016	General comment and maintenance	
1.7	05/2017	All	Article structure changed
1.8	10/2017	All	Art. no. 001-006-000 split into multiple items
1.9	08/2019	Multiple	Images replaced
1.9	01/2023	Page 7, 21	UKCA logo added
2.0	03/2023	Pages 17, 29	Motor 011-044-000 removed
2.1	11/2023	Pages 16, 17	Page 16: sentence “recalibrate after a week” added. Page 17: calibration quantity adjusted
2.2	07/2024	Pages 13, 17, 24, 29	Page 13: images updated and DIN rail text added for wall mounting. Page 17: warning and calculation example added. Page 24: new exploded view. Page 29: item numbers added for wall mounting
2.3	12/2025	Pages 1, 30	Page 1: place name changed. Page 30: Hanskamp address changed
2.4	04/2026	Page 23	Table added - expansion of the container with a second pump

Warranty limitations

The warranty does not cover costs and expenses resulting from:

- Improper use of the equipment, not in accordance with the specifications in the installation and operating manual.
- Any intervention by technicians other than those approved by Hanskamp for carrying out specific operations.
- Incidents such as freezing, ice, fire, flooding, inundation or any other form of extreme water damage, lightning strike.
- Faults in the electrical system or earthing.
- Using compressed air that does not meet Hanskamp's quality standards.
- Damage to the electrical system caused by pests or similar influences.

The warranty does not apply to consequential damage not directly related to the machine itself. All systems have been tested. However, in the event of malfunctions, Hanskamp cannot be held responsible for consequential damage.

4. FAQ

Common problem	Possible cause	Solution
Liquid flows back from the pump into the storage tank.	The HanskampQualityTube is leaking. The rollers are worn. The bearing is worn.	Replace the hose. Replace the rollers. Replace the bearing.
Liquid leaks from the nozzle when the motor is stopped.	Air leakage between pump and nozzle. Nozzle is not mounted perfectly vertically.	Refit the pressure hose onto the nozzle. Check or improve the seal between the coupling and the nozzle. Mount the nozzle completely vertically.
Motor runs but does not pump liquid.	The suction hose is blocked. The rotor is mounted the wrong way round.	Clean the suction hose (if necessary, blow through it). Mount the rotor the other way round.
Leakage at the feed-through coupling.	The hose is too loose on the coupling.	Fit a hose clamp (art. no. 001-153-000) around the coupling/hose.

Copyright and disclaimer
The information in this publication is for informational purposes only, and is not intended as a sales quote. The products offered may differ from the images. Any brand or product references in this manual are for identification purposes only. The company and product names mentioned in this manual are trademarks. No part of this publication may be reproduced or made public without the prior written consent of Hanskamp AgroTech BV. Although this publication has been compiled with the greatest care, Hanskamp AgroTech BV is not liable for any damage that may arise due to any errors or omissions it might contain. The Dutch installation and operating instructions are the original installation and operating instructions. Translations into other languages are based on the Dutch installation and operating instructions as a source document. Hanskamp AgroTech BV accepts no liability for differences between the translations. If there are any doubts about the content and accuracy of the translated installation and operating instructions, the Dutch installation and operating instructions shall prevail.

Declaration of Incorporation of Complete Machines IIA

According to Annex IIA of the Machinery Directive 2006/42/EC, for completed machines

We,
Hanskamp AgroTech BV
Broekstraat 17
7009 ZB Doetinchem
The Netherlands,

Authorised compiler(s) of the technical file:

H.J. Hanskamp,

declare under our sole responsibility that the following product:

35000 & 36000 MultiDos (24 VAC & 24 VDC),
Universal dosing system for liquids,

to which this declaration relates, complies with the provisions of the following directive(s):

- Machinery Directive 2006/42/EC

The product also complies with the provisions of the following standards:

- NEN-EN-IEC 60204-1
- NEN-EN-ISO 12100:2010
- NEN-5509
- NEN-EN 349
- NEN-EN-ISO 13857

If the MultiDos is not connected and the prescribed safety instructions are not used, this Declaration of Conformity is not applicable and no rights can be derived from this declaration.

Doetinchem, the Netherlands, 04-12-2023 H.J. Hanskamp



Appendix 1 Information on spray nozzle holder 003-518-000

003-518-000: Drill holes to allow installation of the hose and spray nozzle. Feed the hose through the central hole and mount the nozzle onto the hose. Then secure the nozzle in place.

Caution! Always install the nozzle in a vertical position.

003-518-000 Spray nozzle holder

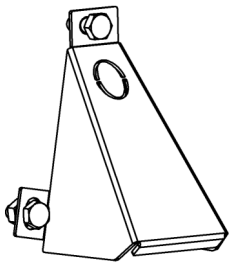

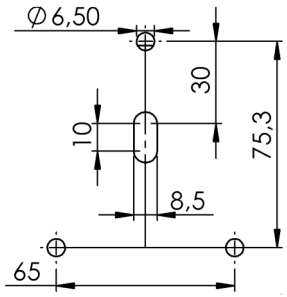

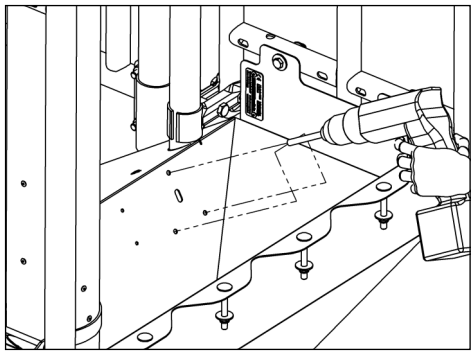

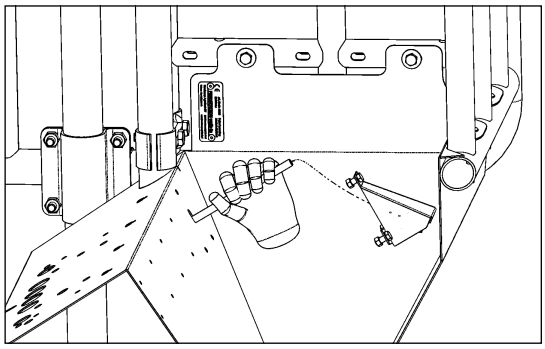

Appendix 2 Article number structure and exploded view of the MultiDos pump

Art. no. 035-321-000

Product group	Colour	Motor	Type	Version
35 = MultiDos 10 rpm 36 = MultiDos 28 rpm	1 = Black 2 = Green 3 = Blue 4 = Red 5 = Orange	0 = DC Motor black (bald) 1 = DC SolidState5 2 = AC with feedback ** 3 = RIM time controlled ** 4 = DC IM motor 5 = AC time ctrld without fb. ** 6 = Air controlled* 7 = RIM pulse* 8 = DC 12V grey motor 1001 *	1 = Container + 1 pump 2 = Container + 2 pumps 3 = Housing + 1 pump	0 = HanskampQualityTube C-210-A 3 = HanskampQualityTube BPT 5 = HanskampQualityTube Q-prene

** only used by 35 MultiDos 10 rpm

* only used by 36 MultiDos 28 rpm

Example art. no. 035-321-000 =

- A MultiDos system suitable for DC control (portion dosing)
- Consists of 2 pumps
- Built in the container (34 litres) with blue cover

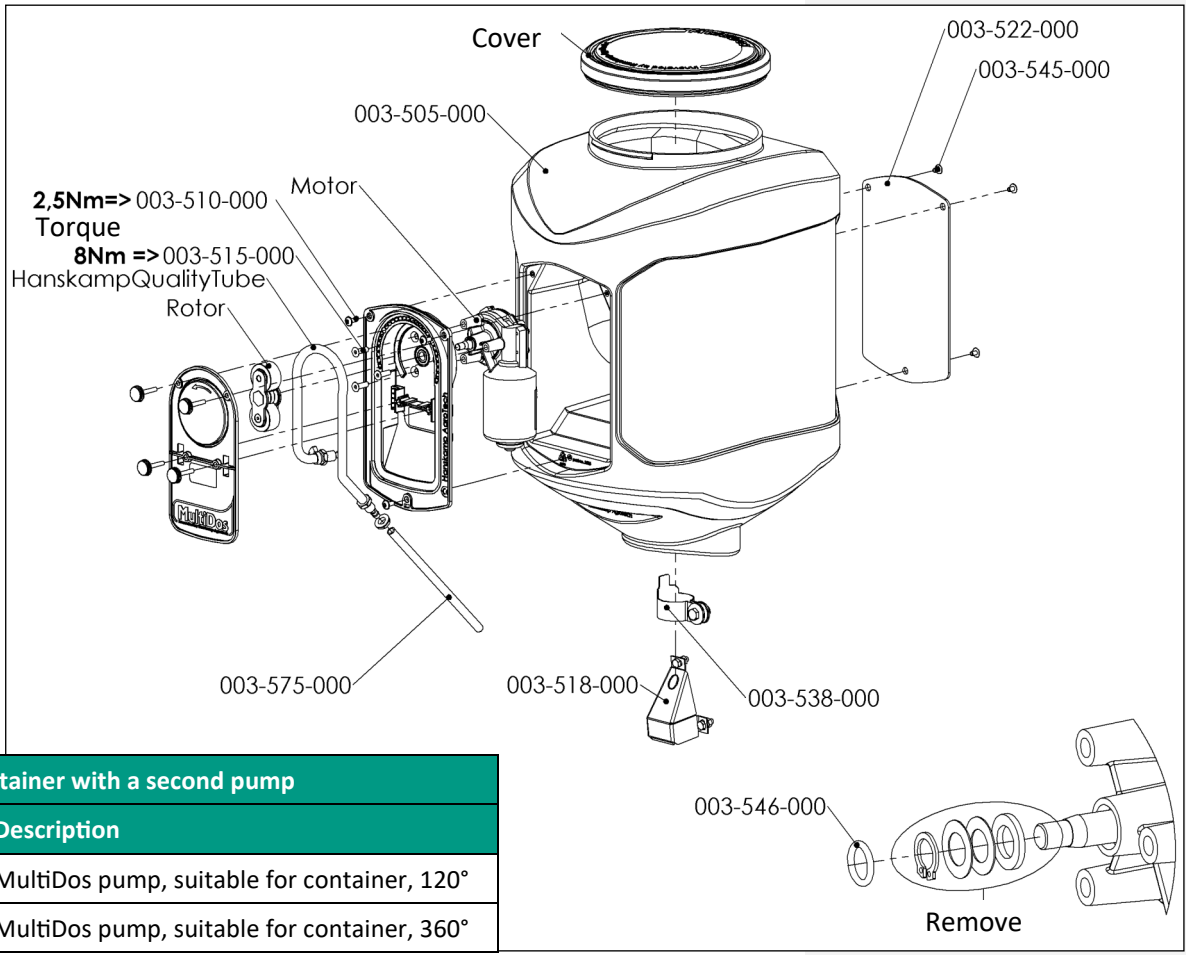

Expand the container with a second pump	
Art. no.	**Description**
035-0X0-005	MultiDos pump, suitable for container, 120°
036-0X0-005	MultiDos pump, suitable for container, 360°

Appendix 3 Exploded view of the wall-mounted version of the MultiDos

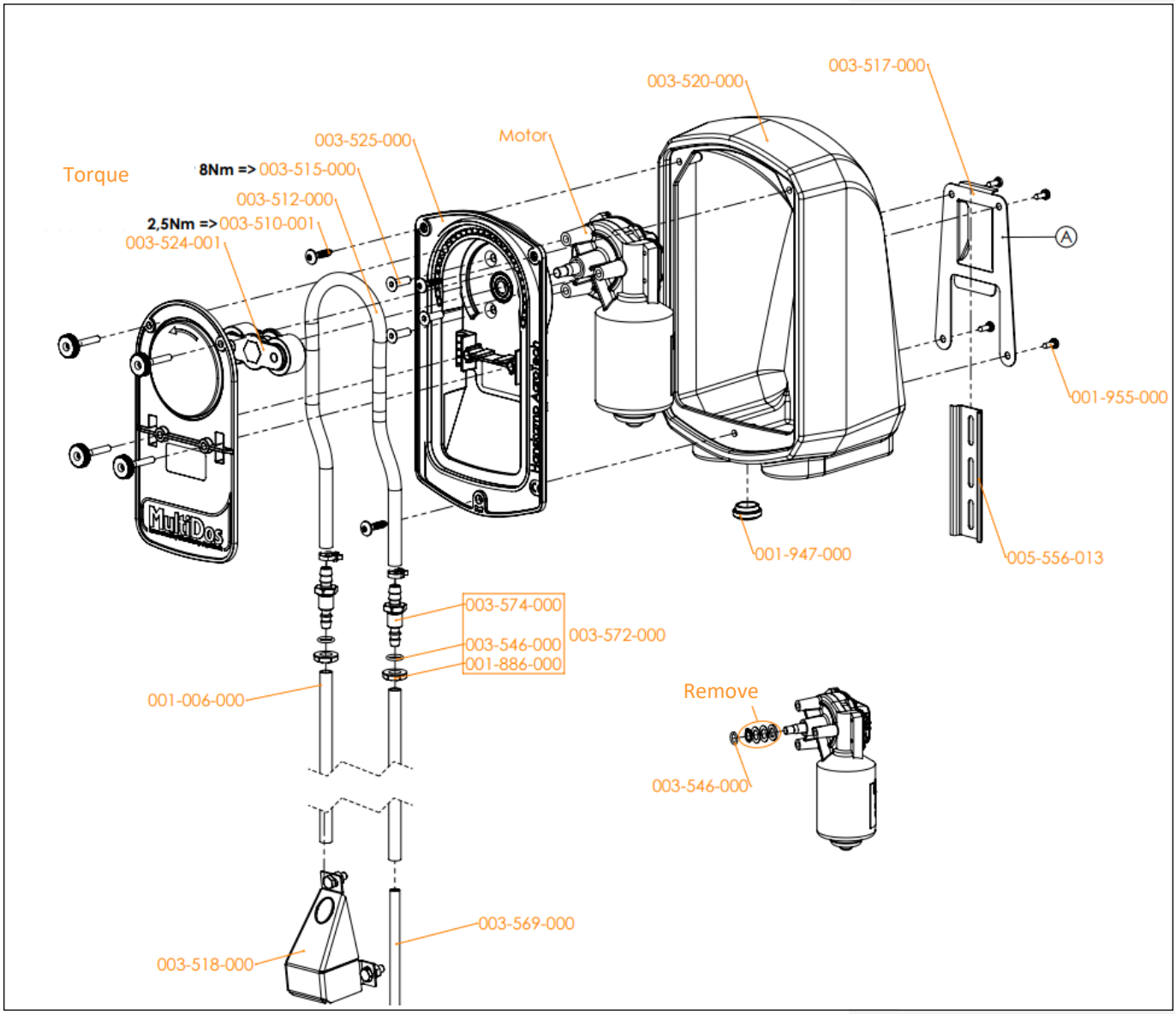

Appendix 4 Exploded view of container with two MultiDos pumps & MultiDos pump

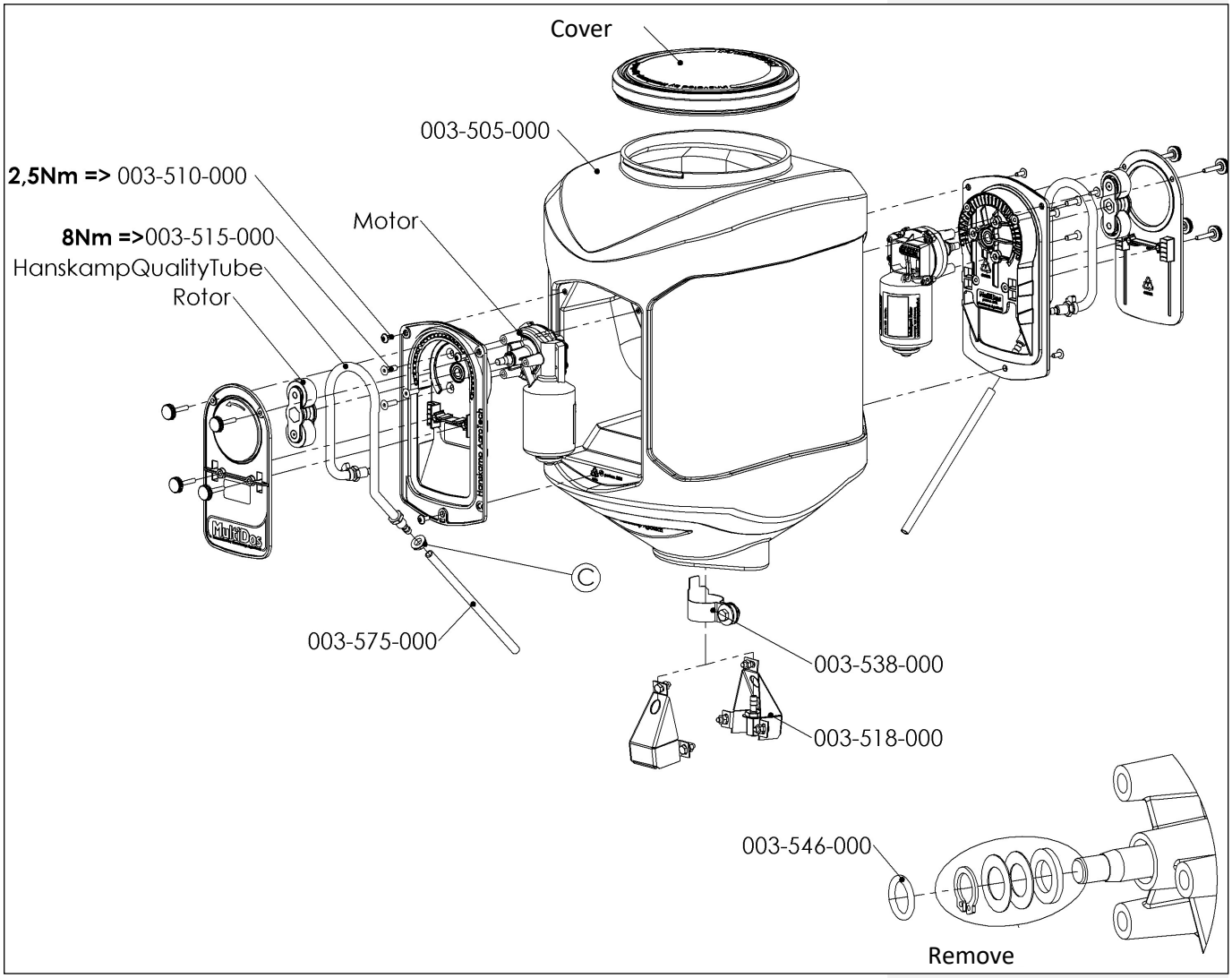

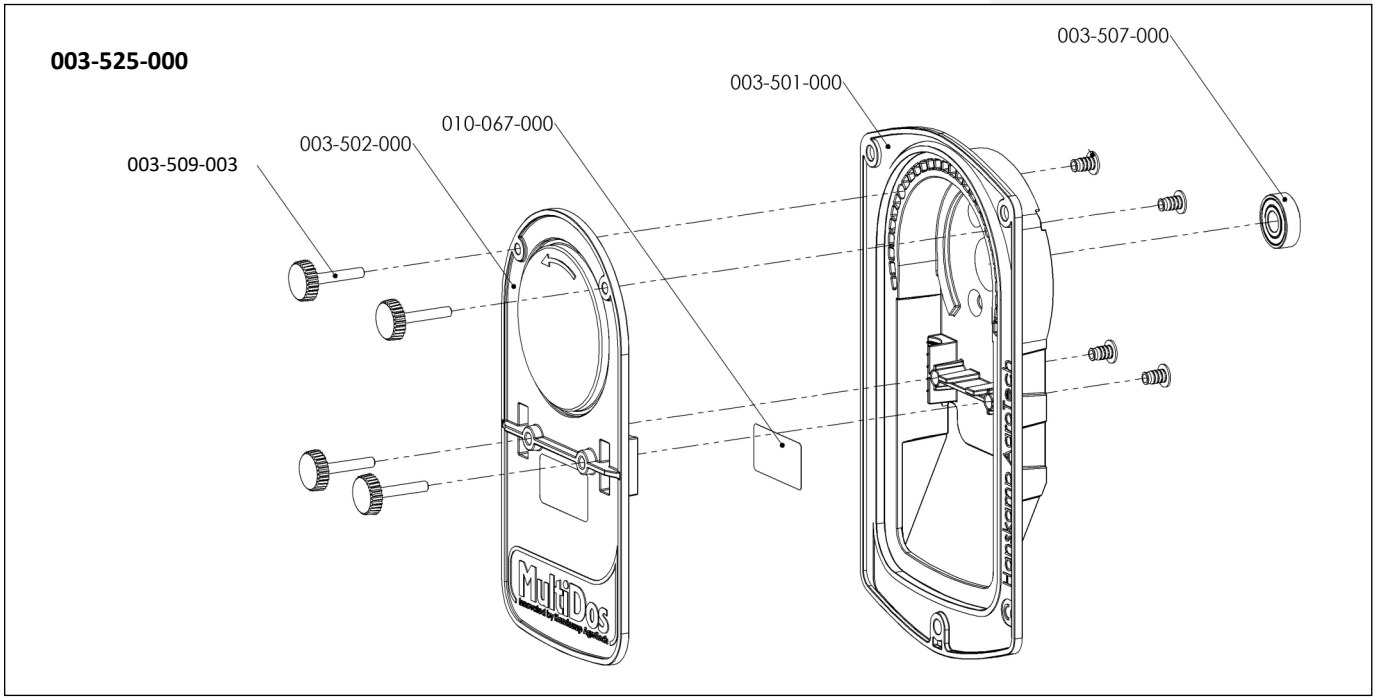

Appendix 5 Exploded view of the rotor

003-524-001 only in combination with HanskampQualityTube 003-512-005 (black rollers)

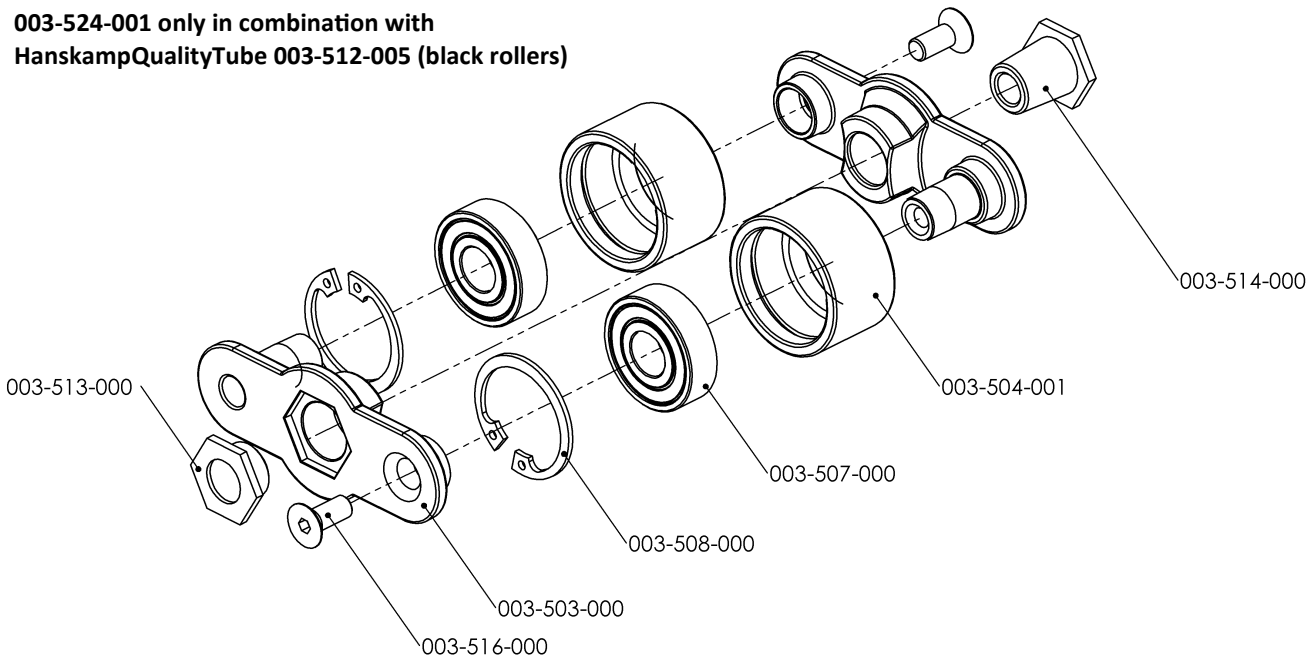

Appendix 6 Hazard warnings and instructions for use of the HanskampQualityTube

003-512-00* HanskampQualityTube
For (milking equipment) dealers, distributors and users of the MultiDos.

Caution! The HanskampQualityTube is not intended for medical use!

Read these warnings and instructions carefully before using the hose or reselling the MultiDos.

The following warnings and instructions must be strictly followed to prevent damage to the hose, leaks, or personal injury.

Warnings

1. **Material:** The HanskampQualityTube is manufactured from thermoplastic material, and performance depends on temperature and pressure.
2. **Fluids:** Some fluids may be absorbed or extracted by the HanskampQualityTube. It is the responsibility of the end user to carefully check and apply the specifications, safety instructions and documentation of the HanskampQualityTube.
3. **Suitability:** It is the responsibility of the end user to determine whether the hose is suitable for the intended application.
4. **Medical use:** The HanskampQualityTube is not suitable for medical applications. Use of this hose in a medical environment is entirely the responsibility of the (milking equipment) dealer and/or end user.
5. **Connection:** To prevent catastrophic disconnection during operation, detachable clamps must always be used when attaching the hose to a coupling or fitting.
6. **Backup system:** Users are advised to have a backup system in case the hose ruptures.
7. **Service life:** No hose is indestructible. This also applies to the HanskampQualityTube in the MultiDos. With long-term use or incorrect installation, the hose may rupture.

The following factors influence the service life of the HanskampQualityTube in the MultiDos liquid pump:

- The type of fluid being pumped.
- The percentage of occlusion of the hose wall.
- The pump speed, in combination with the number of roller cycles per minute and the total number of cycles.
- The amount of system back pressure applied to the hose and pump.
- The temperature of the fluid being pumped and the ambient working temperature.
- Frictional resistance due to incorrect maintenance or wear of rollers and guides.
- The presence of twisted, kinked or excess lengths of Hanskamp Quality Tube in the MultiDos installation.
- Wall thickness and thickness variation.

To prevent possible damage to property and resulting consequential damage when using the HanskampQualityTube in the MultiDos pump, the following points must always be observed:

- Ensure careful setup and follow each of the above variables during use of the HanskampQualityTube in the MultiDos.
- Read and comply with the instructions of Hanskamp (manufacturer) or the (milking equipment) dealer regarding installation, use, maintenance and disassembly of the MultiDos.
- Inspect the Hanskamp Quality Tube for damage before installation.
- Ensure that the correct length of HanskampQualityTube is used and that the hose is not twisted or kinked in the MultiDos installation.
- Continuously check the hose circuit for signs of rupture or leakage of the HanskampQualityTube and take action when this is observed.

Safety data sheets relating to the materials used are available from Hanskamp.

Appendix 7 Spare parts

For maintenance or for whatever reason it is possible to separate parts be ordered from your dealer. Please use therewith as are indicated. Below the drawing item numbers.

Parts 003-525-000 MultiDos Pump		
Art. no.	**Description**	**Quantity**
003-501-000	MultiDos pump housing	1
003-502-000	Pump housing cover MD	1
003-507-000	Ball bearing 6000RS 10x26x8	1
003-509-001	Knurling bolt M5x29 A2	4

Parts MultiDos Wall-Mounted Version		
Art. no.	**Description**	**Quantity**
001-006-002	PVC hose 2 m, Ø7×10	1
001-006-005	PVC hose 5 m, Ø7×10	1
001-947-000	Membrane grommet	1
003-510-000	Socket screw with flange M5x10	3
003-515-000	Countersunk socket head screw M6×20	3
003-518-000	Complete nozzle holder	1
003-569-000	Suction tube Ø8×1 AISI304 l=300 mm	1
003-517-000	Wall bracket for wall mounting 1 mm	1
005-556-013	DIN rail l=110 mm	1
001-955-000	Self-tapping screw Ckkk 4×13 stainless steel A2	4

HanskampQualityTube		
Art. no.	**Description**	**Quantity**
003-512-000	HQ 0.53 m, incl. mounting couplings	1
003-512-002	BPT 0.53 m, incl. mounting couplings	1
003-512-005	Q-prene 0.53 m, incl. mounting couplings	1

Wall-Mount Colour Options	
Art. no.	**Description**
003-520-000	MultiDos wall bracket black incl. 3 inserts
003-540-000	MultiDos wall bracket green incl. 3 inserts
003-541-000	MultiDos wall bracket blue incl. 3 inserts
003-542-000	MultiDos wall bracket red incl. 3 inserts
003-543-000	MultiDos wall bracket orange incl. 3 inserts

Motors (art. no. 003-546-000 O-ring 10×2 to be added)		
Sequence no.	**Art. no.**	**Description**
035-*0*-00*	001-436-000	Black motor 10 rpm
035-*1*-00*	001-669-000	Motor SolidState5 17 rpm 120°
035-*3*-00*	011-091-000	RIM motor 8 rpm 24 VAC with feedback
035-*4*-00*	011-030-000	Intelligent motor 17 rpm 120°
035-*5*-00*	011-038-000	Motor 24 VAC 10 rpm time-controlled
036-*0*-00*	001-434-000	Black motor 28 rpm
036-*1*-00*	011-021-000	Motor SolidState5 28 rpm
036-*4*-00*	011-095-000	RIM motor complete 28 rpm 24 VAC with feedback
036-*4*-00*	001-652-000	Intelligent black motor 28 rpm
036-*7*-00*	011-125-000	RIM motor 28 rpm 24 VAC/DC with feedback
036-*8*-00*	001-001-000	Dosing motor 40 rpm grey

Parts 003-524-000 / 003-524-001 Rotor MultiDos 003-524-000* 003-524-001**		
Art. no.	**Description**	**Quantity**
003-503-000	Rotor part MultiDos red	2
003-504-000	Plastic roller Ø35.0 mm*	2
003-504-001	Plastic roller Ø31.6 mm black**	2
003-507-000	Ball bearing	2
003-508-000	Circlip DIN 472 J026x1.2 A2	2
003-513-000	Conical stainless steel adapter	1
003-514-000	Adapter SW17 M8 MultiDos	1
003-516-000	Countersunk socket head screw	2

Parts MultiDos Container Version 1 / 2 pumps		
Art. no.	**Description**	**Quantity**
001-006-005	PVC hose 5 m, Ø7×10	1 / 2
003-505-000	MultiDos container 32 litres	1
003-510-000	Socket head screw with flange M5×10	3 / 6
003-515-000	Countersunk socket head screw M6×20	3 / 6
003-521-000	MultiDos mounting pipe 1¼"	1
003-522-000	MultiDos blind plate	1 / 0
003-518-000	Complete nozzle holder	1 / 2
003-538-000	Container fixing band Ø42.4	1
003-545-000	Socket head screw with flange M5×8	3 / 0
003-575-000	Suction hose container Ø7×10 l=20 cm	1 / 2

Colour options Container	
Art. no.	**Description**
003-506-000	MultiDos container cover black
003-530-000	MultiDos container cover green
003-531-000	MultiDos container cover blue
003-532-000	MultiDos container cover red
003-534-000	MultiDos container cover orange

Hanskamp AgroTech BV
Xenonstraat 6
7031 HX Wehl
The Netherlands
Tel: +31 (0)314 - 393 797
www.hanskamp.com

Also take a look at: