L'port Electric

004-080-000
004-082-000
004-080-001
004-082-001

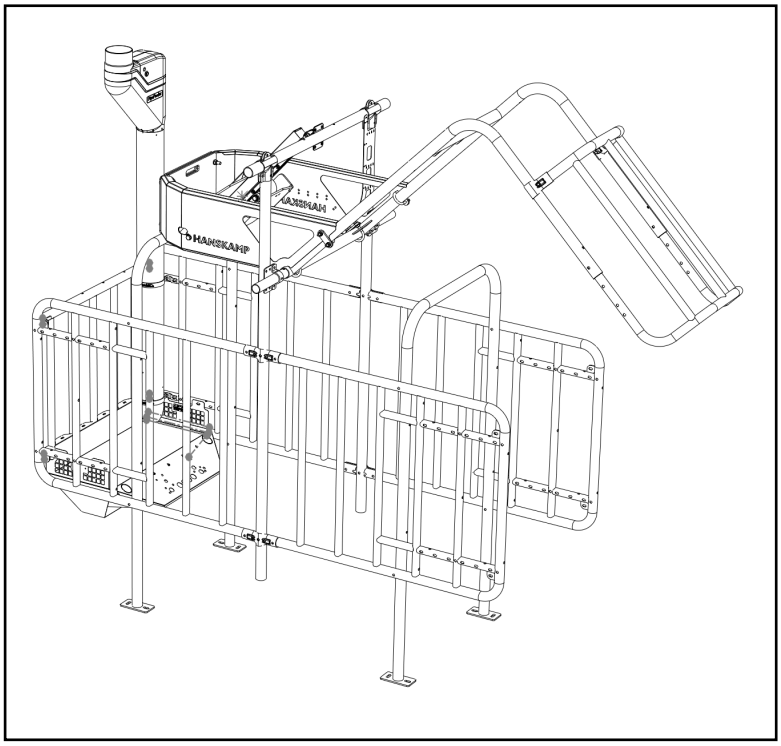

Sluithek
Closing gate
Schließbügel
Porte arrière automatique

Installation and Operating Instructions **EN**

HANSKAMP
Innovation for dairy farming

Article number: 010-080-000

Date: April 2026
Version 1.5 - Translation of Original Installation and Operating Instructions
According to Annex 1 Section 1.7.4 of the Machinery Directive 2006/42/EC

Wehl,
The Netherlands
www.hanskamp.com

Foreword

Contents of the Installation and Operating Instructions

This manual contains the necessary information to correctly install and operate the L'port Electric, or to convert a standard L'port into an L'port Electric. Study this information carefully and ensure that you understand everything before configuring the L'port Electric. Failure to do so may result in damage to the equipment. Contact Hanskamp if the information is unclear to you or if you require additional information.

All information in this manual has been compiled with care. Hanskamp is not liable for errors or omissions in this manual. The recommendations are intended as guidelines. All instructions, illustrations and specifications in this manual are based on the latest information available at the time of publication. Your L'port Electric may contain improvements, features or options that are not covered in this manual.

Applicability

The table below shows the type numbers of the L'port Electric and the conversion kits to which this manual applies.

Model designation

Model	Type number
L'port Electric Closing Gate Universal	004-080-000
L'port Electric Closing Gate XL	004-082-000
Conversion kit L'port Electric Closing Gate Universal (from page 10)	004-080-001
Conversion kit L'port Electric Closing Gate XL (from page 10)	004-082-001

Contact number of milking technology dealer

We recommend that you write down the name, phone number, and email address of your milking technology dealer in the table below. This way, you can be sure to always have the correct contact information easily at hand.

Name	
Address	
Phone number	
E-mail	

1. Introduction

The L’port Electric closing gate from Hanskamp is an electrically powered gate that secures the entrance to the feed station. By safely closing the feed station, it prevents other cows from bumping into or disturbing the cow inside. The L’port Electric closing gate ensures that each cow can consume her concentrate feed in peace. This way, you can be confident that the feed reaches the correct cow.

The L'port Electric closing gate can be easily installed on any type of feed station. For feed stations with shorter side gates, an XL extension element is available.

The information in this manual is aimed at dairy farmers and technicians.

- Dairy farmers use the information to test and adjust the L'port Electric.
- Technicians will use it to install and configure the L'port Electric, or to convert an existing pneumatic system to the L'port Electric.

2. Safety

2.1 Introduction

The Safety Warning symbol indicates important safety notices on your L'port Electric and in this manual. When you see this symbol, be careful: there is a risk of personal injury or death. Always follow the safety instructions carefully.



Safety Warning Symbol

2.2 Warning Terms

Please note the use of the warning signs **CAUTION** and **DANGER** in the safety messages. The following guidelines apply to the warning messages:



Caution! Indicates a potentially hazardous situation which, if not avoided, could result in minor personal injury or damage to equipment or the surrounding area.



Danger! Indicates a potentially hazardous situation which, if not avoided, could result in death or serious injury.

2.3 Safety Instructions

You are responsible for the safe operation and maintenance of your L'port Electric. You must ensure that you and anyone else who operates, maintains, or works in the vicinity of the L'port Electric is familiar with all the safety information contained in this manual.

You are the key to safety. Proper safety precautions protect both you and those around you. Incorporate these measures into your overall safety program. Ensure that EVERYONE who operates, maintains, or works in the vicinity of the L'port Electric is aware of these safety protocols. Do not risk injury or death by ignoring these safety precautions.

- L'port Electric owners must ensure that all users receive training before operating the L'port Electric. This training should be repeated at least once per year.
- Users must read, understand, and follow all safety and operating instructions contained in this manual.
- Any person who has not fully read and understood these safety and operating instructions must not operate the L'port Electric.
- Do not make any modifications to the equipment. Unauthorised alterations may affect its operation, reduce the equipment’s lifespan, and result in personal injury.
- Use only genuine spare parts and ensure that they are fitted by qualified technicians

2.3.1 General Safety

- Ensure that you have read and understood this manual and the safety instructions before connecting the power supply to operate or adjust the L'port Electric, or before switching it off for maintenance.
- Only trained personnel are permitted to operate the L'port Electric.
- Install all guards and safety devices before commissioning the L'port Electric.
- Wear the appropriate personal protective equipment (PPE).
- Before cleaning or performing maintenance on the L'port Electric, switch off and isolate the electrical supply. When converting an existing L'port to Electric, first depressurise the system and then disconnect the air supply.
- Ensure that you have local emergency medical contact numbers readily available.
- Contact your milking equipment dealer if you have further questions.
- Review all safety-related topics with all users regularly (at least annually).

2.3.2 Electrical Safety

- Only a qualified electrician may install the power supply for the L'port Electric.
- Verify that the electrical grounding of the system and all components of the L'port Electric comply with local regulations and standards.
- Replace any damaged electrical cables, cable sheaths, switches, or components immediately.
- Isolate or switch off the electrical supply before opening the L'port Electric or performing work on the electrical system.

2.3.3 Installation Safety

- Ensure that you have read and understood the instructions in this manual.
- Ensure that the L'port Electric has been installed correctly, in accordance with this manual.

2.3.4 Safe Operation

- Ensure that you have read and understood this manual and the safety instructions before connecting the power supply to operate or adjust the L'port Electric, or before switching it off for maintenance.
- Only trained personnel are permitted to operate the L'port Electric.
- Before cleaning or performing maintenance on the L'port Electric, disconnect the electrical supply by unplugging it.
- Install the cover and all other safety devices before commissioning the L'port Electric gate.
- Keep hands, feet, hair and clothing away from moving or live components.
- Keep unauthorised persons, especially small children, away from the L'port Electric at all times.
- Before applying power to the L'port Electric, ensure that all components are securely fastened and that all cables and fittings are in good condition.
- Contact your milking equipment dealer if you have any further questions.

2.3.5 Safety during Maintenance

- Ensure that you have read and understood this manual and the safety instructions before connecting the power supply to operate or adjust the L'port Electric, or before switching it off for maintenance.
- Only trained personnel are permitted to convert the L'port to the L'port Electric.
- Only trained personnel are permitted to install the L'port Electric.
- Only trained personnel are permitted to operate the L'port Electric.
- Only trained personnel are permitted to maintain the L'port Electric.
- Before cleaning or carrying out maintenance on the L'port Electric, disconnect the electrical supply by unplugging it.
- Wear protective clothing and safety glasses when working on the electrical system.
- Ensure all guards and safety devices are reinstalled after maintenance work is completed.

2.3.6 Safety Notices

- This chapter on safety notices contains the general safety notices. Specific safety notices are included in the relevant sections of this manual, where potential hazards may occur if the procedures or instructions are not followed.

3. Installation and Operating Instructions

General Description

The L'port Electric closing gate (fig. 1) from Hanskamp is an electrically powered closing gate designed to secure the concentrate feed station when cows come to consume their feed portions. The L'port Electric closing gate should be connected in parallel across the concentrate feed motors for all types of feed. This installation manual provides all the steps required for the correct installation of the L'port Electric closing gate. In addition, this manual includes a procedure for converting an existing L'port to the L'port Electric using a conversion kit.

Always read this manual completely and follow all safety instructions. For examples of installation, please visit www.hanskamp.com. For part numbers and descriptions of certain components, see the appendix.

Transport and Storage

The L'port Electric closing gate is transported on a pallet. This pallet is fully sealed, and the corners are taped to prevent damage. Storage of the L'port Electric closing gate should be carried out in the same manner.

Caution! Always move the pallet using suitable equipment (forklift, pallet truck, pump truck, etc.).

Caution! When unpacking the pallet, parts may fall off.

Caution! The L'port Electric installation must be protected from weather exposure. Hanskamp advises against outdoor installation.

1

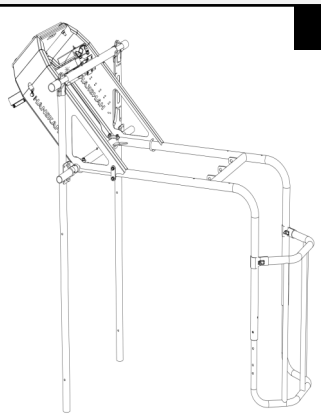

004-080-000 L'port Electric

The pallet contains:
1. 1x Parts bag L'port closing gate universal (art. no. 004-056-000)
2. 1x Conversion kit L'port Electric closing gate universal (art. no. 004-080-001)
3. 1x Hinge tube LP 1¼" x 2.6 l=1190 mm (art. no. 004-108-000)
4. 2x Standing leg tube LP 1½" x 3.25 l=1976 mm (art. no. 004-109-000)
5. 1x Cylinder support tube LP 1½" x 3.25 l=1190 mm (art. no. 004-110-000)
6. 1x Moving element LP (art. no. 004-111-000)
7. 1x Extension element LP universal (art. no. 004-112-000)

004-082-000 L'port Electric XL

The pallet contains:
1. 1x Parts bag L'port closing gate XL (art. no. 004-058-000)
2. 1x Conversion kit L'port Electric closing gate universal XL (art. no. 004-082-001)
3. 1x Hinge tube LP 1¼" x 2.6 l=1190 mm (art. no. 004-108-000)
4. 2x Standing leg tube LP 1½" x 3.25 l=1976 mm (art. no. 004-109-000)
5. 1x Cylinder support tube LP 1½" x 3.25 l=1190 mm (art. no. 004-110-000)
6. 1x Moving element LP (art. no. 004-111-000)
7. 1x Extension element L'port XL (art. no. 004-113-000)

004-080-001 Conversion kit L'port Electric Closing Gate Universal

The pallet contains:
1. 1x Actuator, complete with control, rack, bearings and mounting brackets (art. no. 004-151-000)
2. 1x Side plate left (art. no. 004-152-000)
3. 1x Side plate right (art. no. 004-153-000)
4. 1x Weight - Back plate with logo (art. no. 004-154-000)
5. 8x Weight with handle (art. no. 004-155-000)
6. 1x Cable guide plate (art. no. 004-156-000)
7. 1x Mounting material

004-082-001 Conversion kit L'port Electric Closing Gate XL

The pallet contains:
1. 1x Actuator, complete with control, rack, bearings and mounting brackets (art. no. 004-151-000)
2. 1x Side plate left (art. no. 004-152-000)
3. 1x Side plate right (art. no. 004-153-000)
4. 1x Weight - Back plate with logo (art. no. 004-154-000)
5. 12x Weight with handle (art. no. 004-155-000)
6. 1x Cable guide plate (art. no. 004-156-000)
7. 1x Mounting material

001-758-000 Serial Number Sticker
Located on the side of the service switch (fig. 21, E)

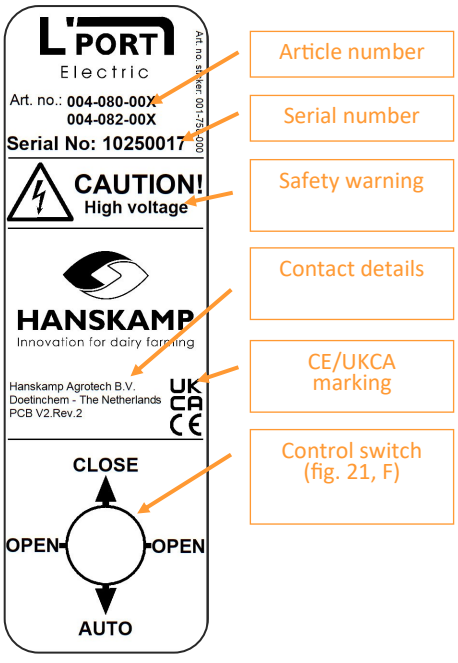

Safety Stickers

The user and installer are responsible for the safe operation and maintenance of the L'port Electric closing gate. To ensure safety around the L'port Electric closing gate, safety stickers are used. These stickers must be applied correctly. This installation and operating manual indicates where each sticker should be placed (see, for example, fig. 2).

Applying the Stickers

- Ensure the surface where the sticker will be applied is dry and clean.
- Make sure the surface temperature is at least 5 °C.
- Determine the correct position for the sticker.
- Peel back a small part of the backing foil from the sticker.
- Place the sticker on the surface and press part of the adhesive layer onto the surface.
- Carefully remove the remaining backing foil and apply the rest of the sticker.
- Pierce any air bubbles with a needle and use the backing foil to smooth the sticker.

Maintaining the Stickers

- Keep safety stickers clean and legible. Clean them with soap and water. Do not use solvents or abrasive cleaners that could damage the stickers.
- Replace illegible stickers or reapply missing stickers.

Safety stickers are available from Hanskamp. Always mention the correct article number when ordering.

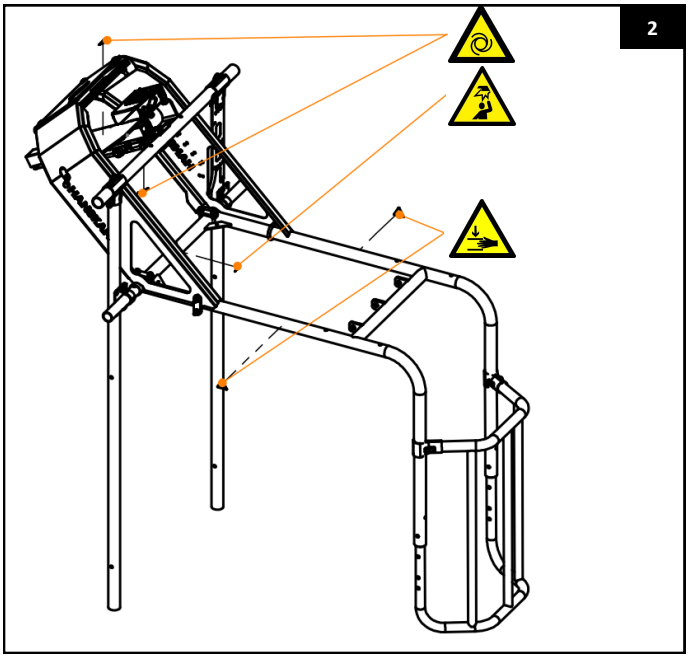



001-702-000 Warning Sticker Hand Entrapment Hazard
Apply the supplied stickers to the moving element where it rests on the anti-jump gate. See fig. 2.



001-703-000 Warning Sticker Impact Hazard
Apply the supplied stickers to the moving element where the hinge tube is inserted. See fig. 2.



001-755-000 Warning Sticker Starts Automatically
Apply the supplied stickers to the stainless steel side covers. See fig. 2.

Installation of new L'port Electric system

1. Check the parts list to ensure that all components are present.

Caution! No mounting hardware is supplied for attaching the L'port Electric closing gate to the concentrate feed station.

2. Measure approximately 1100 mm in length from the centre of the feed trough and 575 mm in height from the centre of the anti-jump gate (fig. 3). Attach the standing leg tubes (art. no. 004-109-000) to the side gates at this position. No mounting hardware is supplied for this by default.
3. Mount the tube mounting plate (art. no. 004-106-000) and the two full clamps (art. no. 001-058-000) on both standing leg tubes (fig. 3A). Do not fully tighten them yet.
4. Place the 3-hole T-clamps (art. no. 004-114-000) on top of the two standing leg tubes and connect the standing leg tubes with the cylinder mounting tube (art. no. 004-110-000) (fig. 3B).
5. Mount the double 4-hole half clamp with cylinder mounting eyes (art. no. 004-103-000 & 004-104-000) at the centre of the cylinder mounting tube (fig. 4).

Caution! Ensure that the cylinder mounting tube is firmly fixed and cannot rotate in the 3-hole T-clamps. Also, make sure that the double 4-hole half clamp cannot rotate around the cylinder mounting tube and that it is positioned correctly centred and horizontal relative to the tube. Improper installation will affect the operation of the L'port Electric closing gate.

6. Slide the hinge tube (art. no. 004-108-000) into the tube of the moving element (art. no. 004-111-000). Secure this hinge tube by driving a tension pin (art. no. 001-555-000) through both sides of the tube (fig. 5).
7. Screw the grease nipple (art. no. 001-559-000) into the hinge tube (art. no. 004-111-000) (fig. 5A). Add lubricant through this nipple to prevent noise and wear between the rotating parts.

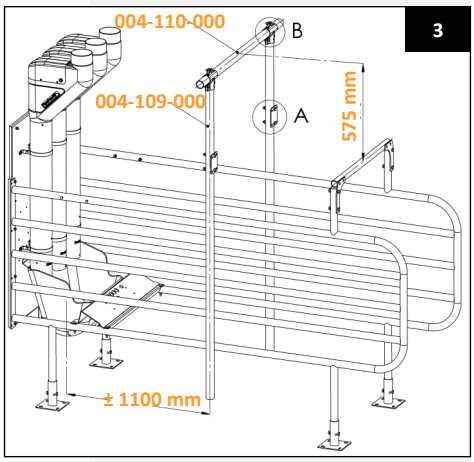

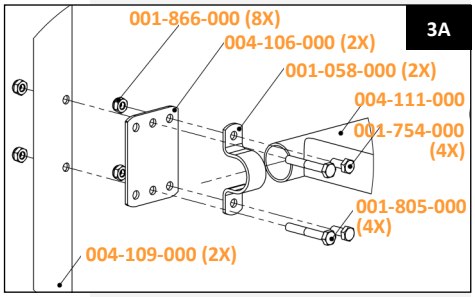

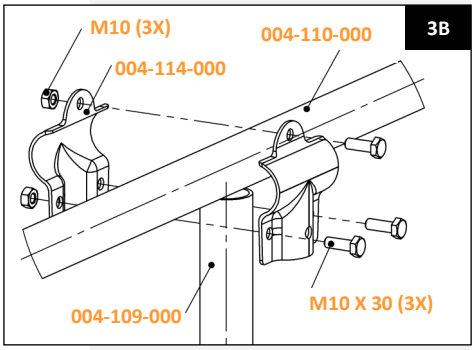

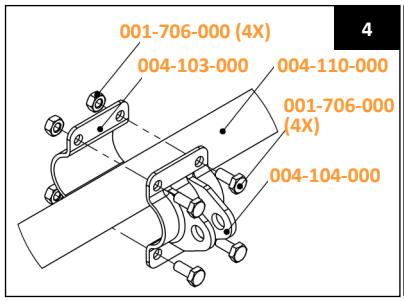

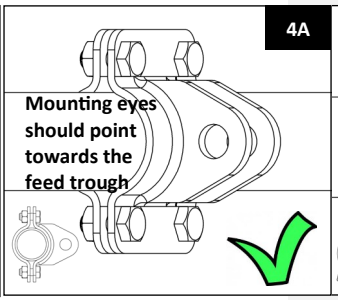

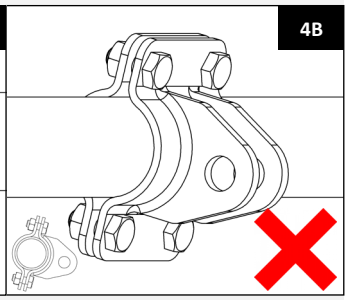

8. Attach the hinge tube to the standing leg tubes. Secure the hinge tube using the full clamps (fig. 3A). Make sure the moving element is centred between the two standing leg tubes. Place the moving element onto the existing anti-jump gate.

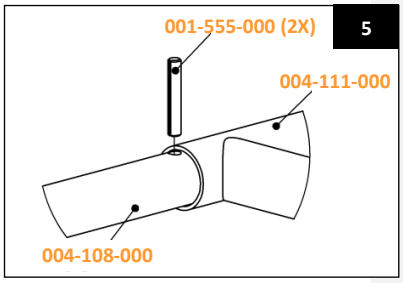

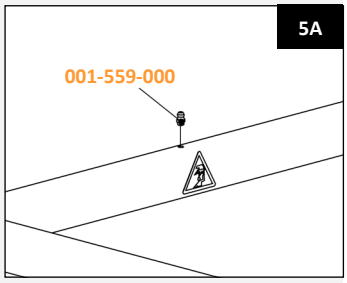

Caution! Ensure the horizontal tubes of the moving element are level when the moving element is mounted and resting on the anti-jump gate. If this is not the case, adjust the height of the standing leg tubes accordingly.

9. Assemble the extension element (art. no. 004-112-000 or 004-113-000 for the longer version) to the moving element using the supplied bolts, nuts and clamps (art. no. 001-611-000 or 004-115-000) (fig. 5B).
10. Mount article no. 004-127-000 and article no. 004-206-000 on the hinge tube and the support tube (fig. 5C).
11. Cut the L'port standing leg tube (art. no. 004-109-000) approximately 1 cm below the clamp. The height is variable; therefore, there are no fixed dimensions (fig. 5D).

Please note! Adjust the extension element carefully to ensure the cow's udders are properly protected. Also pay attention to the walk-through height when the L'port closing gate is open.

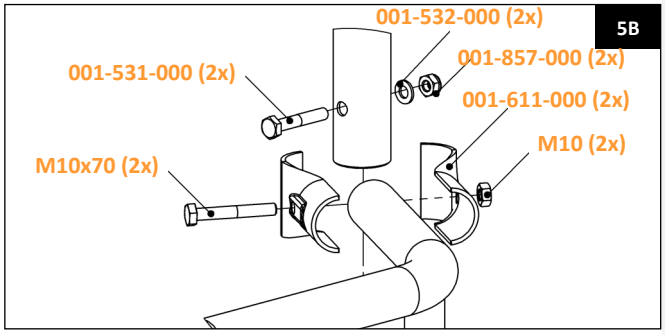

- Art. no. 004-127-000 round insert 1¼" (Ø 42.4) grey
- Art. no. 004-206-000 round insert 1.7/8" x 1.0-3.0 mm

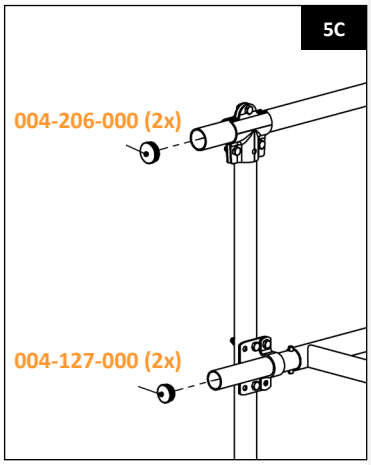

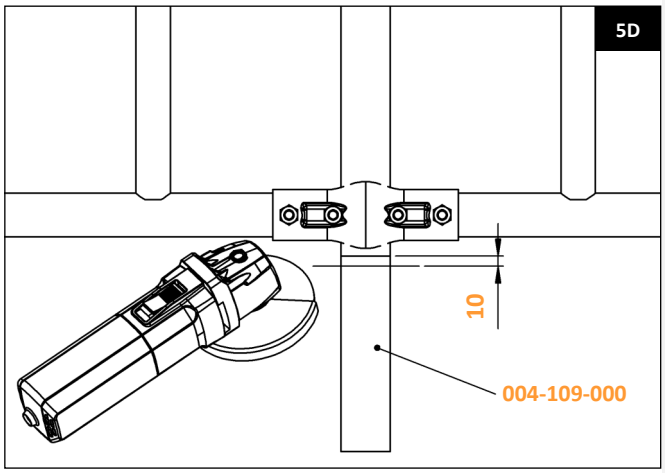

Conversion of pneumatic L'port to L'port Electric

Danger! Before starting disassembly, always ensure that the system is completely depressurised and de-energised.

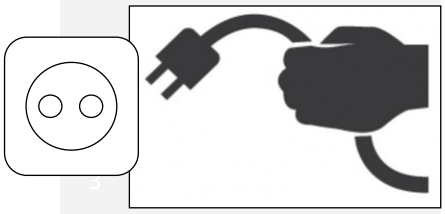

Caution! After disconnecting the power supply, always wait at least 30 seconds before opening the system!

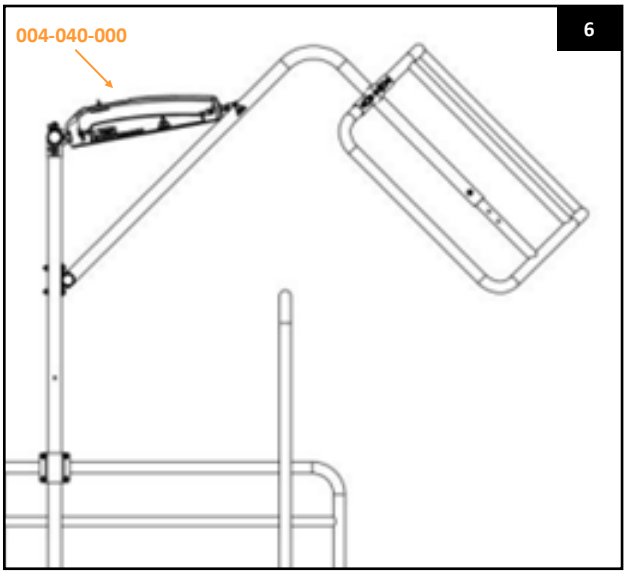

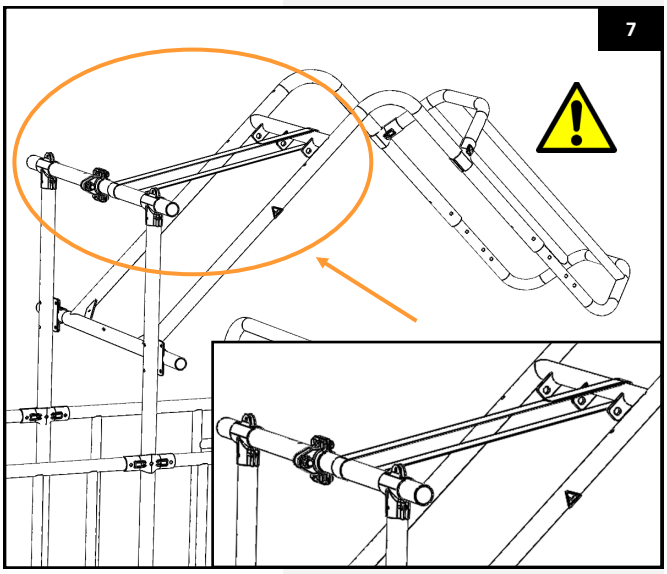

Caution! Make sure the tension strap is securely fastened so that the moving element can no longer move.

1. Disconnect the air supply line as well as the power and control cables. Secure the moving element in the open position using a tension strap. Dismantle the cylinder set (art. no. 004-040-000) by removing the pin of the double-clevis rear hinge from the double 4-hole half clamp (art. no. 004-104-000). To do this, carefully spread the retaining ring apart until it comes loose from the pin. Warning! Do not remove the 4-hole half clamp (art. no. 004-104-000).

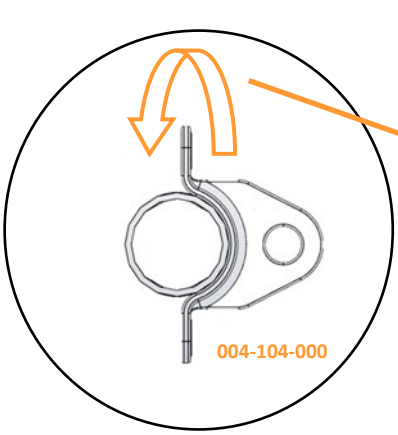

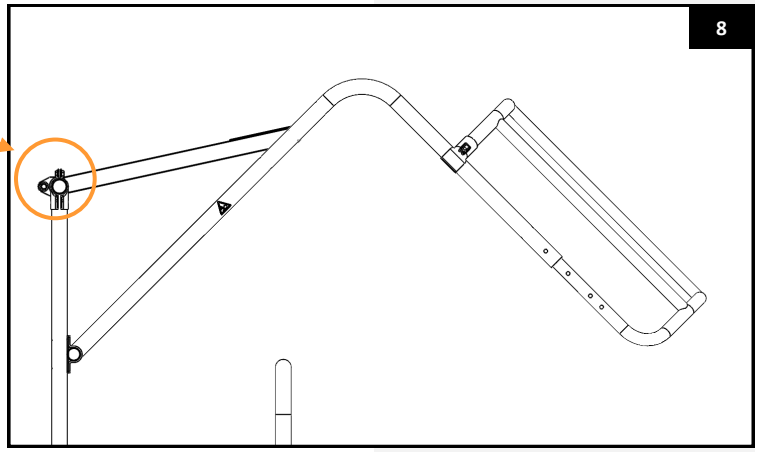

2. Loosen the 4-hole half clamp (art. no. 004-104-000) and rotate it 180° counterclockwise. Then retighten the 4-hole half clamp (fig. 8).

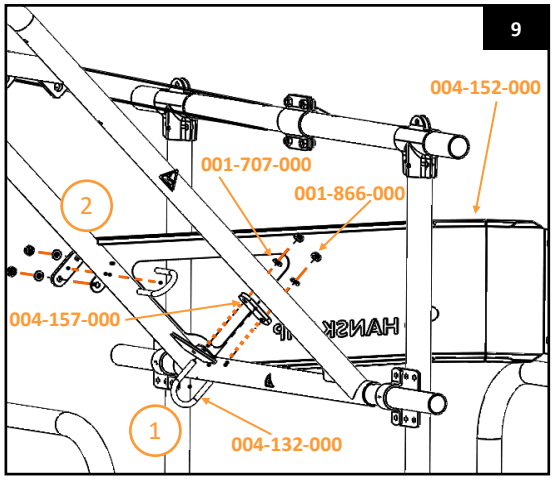

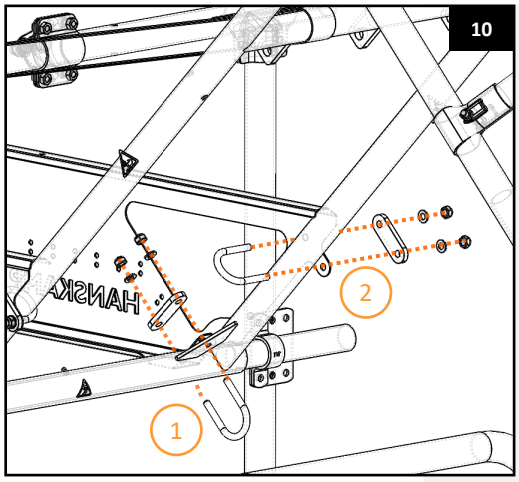

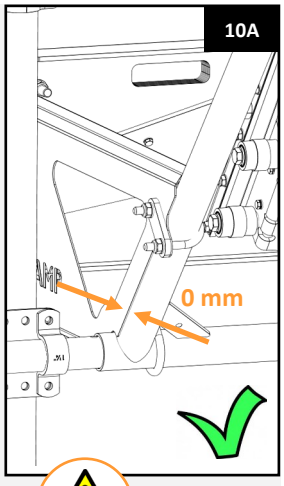

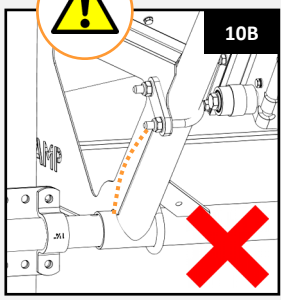

3 Mount the left side plate (art. no. 004-152-000) onto the closing gate. Position the wire bracket (art. no. 004-132-000) from the inside around the hinge bracket (art. no. 004-108-000) and through the holes in the side plate (1). Fit the wire bracket plate (art. no. 004-157-000) on top of the side plate, then install the M10 washer (art. no. 001-707-000) and the M10 locknut (art. no. 001-866-000) (2) (fig. 9).

Mount the right side plate (art. no. 004-153-000) onto the closing gate. Position the wire bracket (art. no. 004-132-000) from the inside around the hinge bracket (art. no. 004-108-000) and through the holes in the side plate. Fit the wire bracket plate (art. no. 004-157-000) on top of the side plate, then install the M10 washer (art. no. 001-707-000) and the M10 locknut (art. no. 001-866-000) (fig. 10).

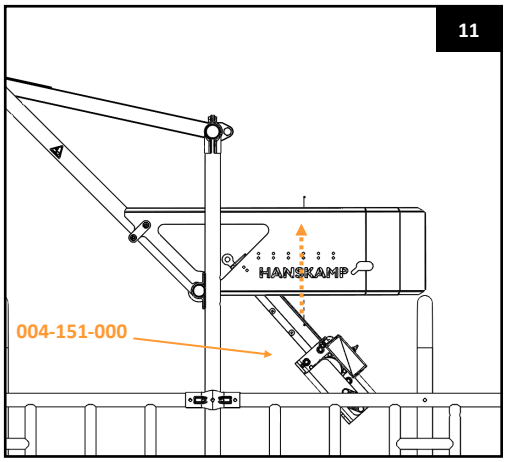

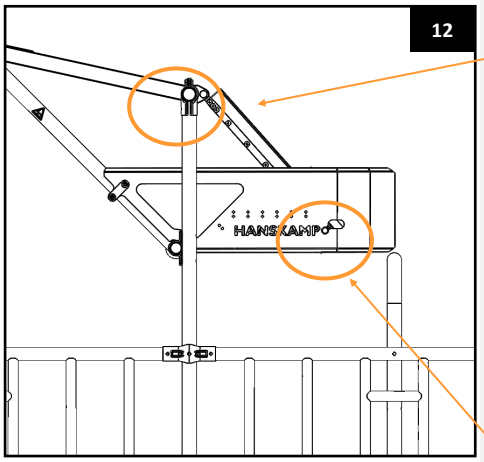

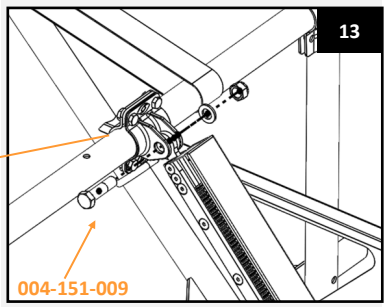

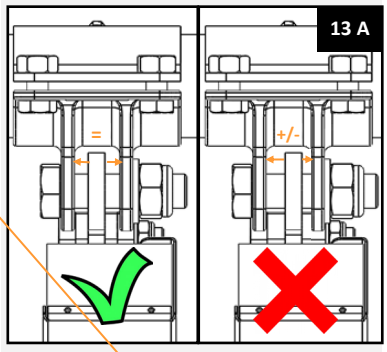



4. Place the actuator (art. no. 004-151-000) in the extended position. Lift the actuator into the recesses on the side plates (fig. 11). Tighten the bolts to secure the actuator to the side plates. Next, insert the bolt (art. no. 004-151-009) through the 4-hole half clamp. Then fit a retaining ring and a nut, and tighten them (figs. 13 & 14). Ensure that the eye is mounted exactly in the centre. If necessary, adjust the position of the 4-hole half clamp (fig. 13A).

Caution! The grease nipples on the bearing (art. no. 005-151-002) are pre-lubricated at the factory and do not require additional lubrication.



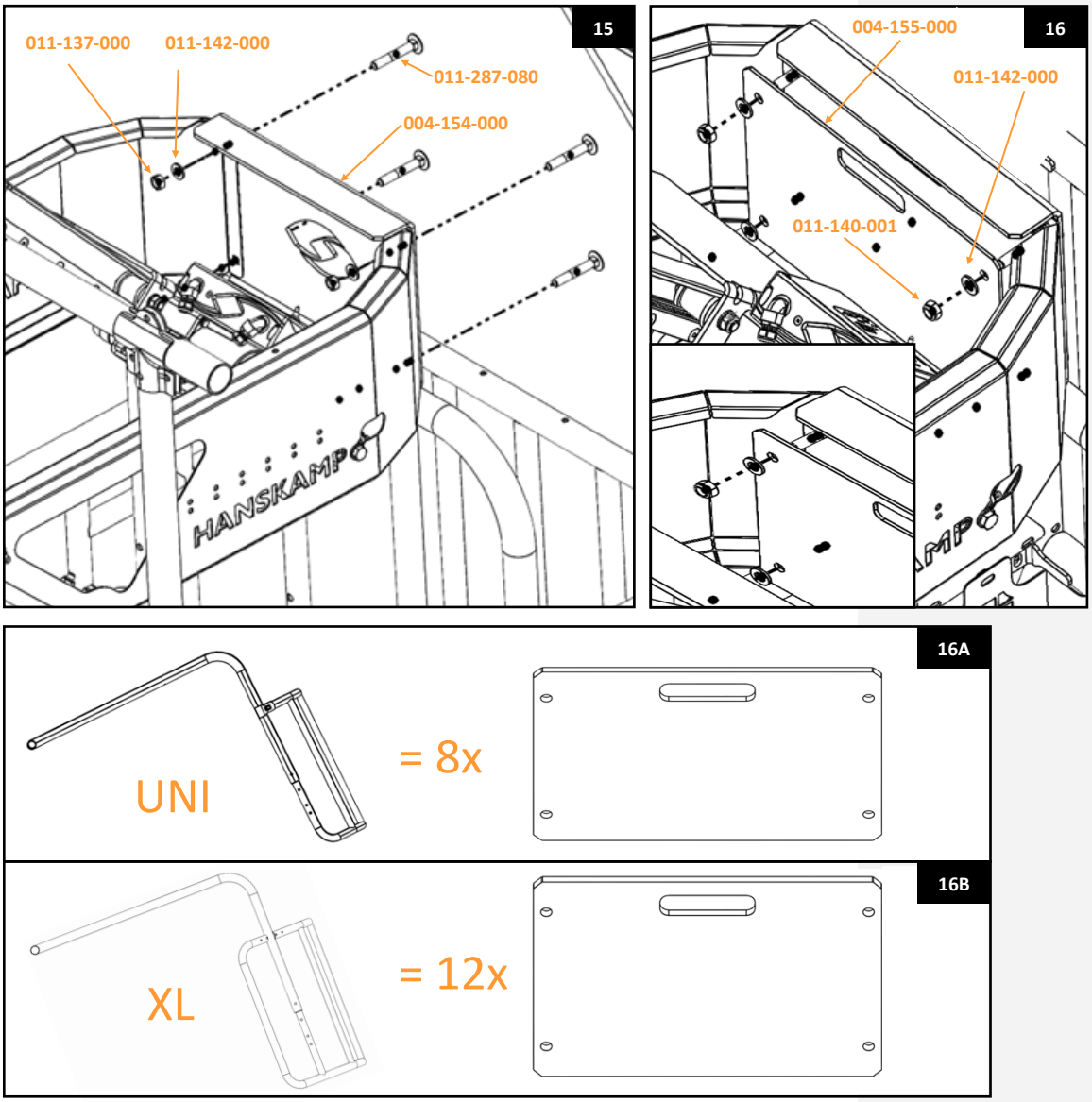

5. Next, mount the rear plate weight (art. no. 004-154-000) between the two side plates. The rear plate weight is secured using 4 bolts (art. no. 011-287-080). Insert the bolts into the slots in the weight from the outside inwards. Then fit 4 washers (art. no. 011-142-000) and 4 non-locking nuts (art. no. 011-137-000).

   Now place the 8 weights (art. no. 004-155-000), then fit 4 washers (art. no. 011-142-000) followed by 4 locknuts (art. no. 011-140-001) (fig. 16A). For the XL version, 12 weights (art. no. 004-155-000) must be fitted (fig. 16B).

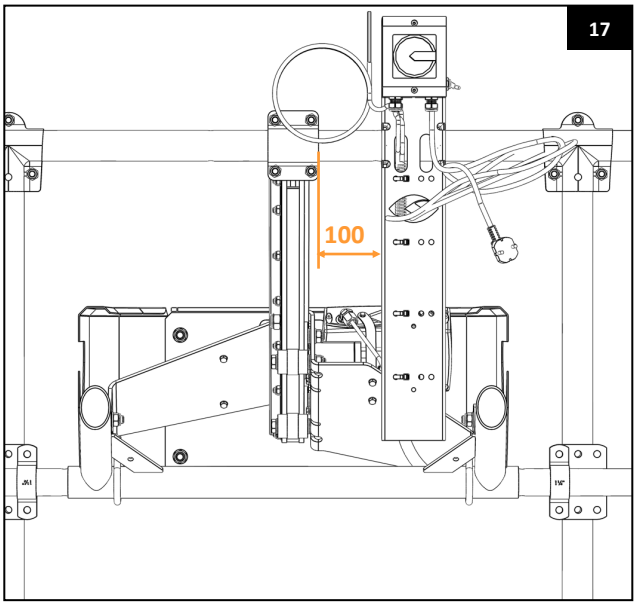

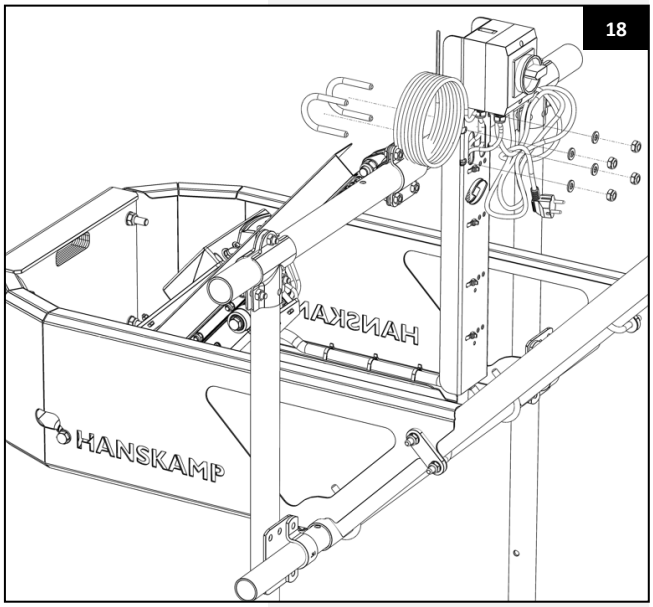

6. Install the service switch (fig. 21) on the right-hand side of the installation, 100 mm from the hinge. Attach the service switch plate to the support tube using the wire clips. Route the cable assembly through the side gate and secure it with cable ties (art. no. 001-091-002) (fig. 19).

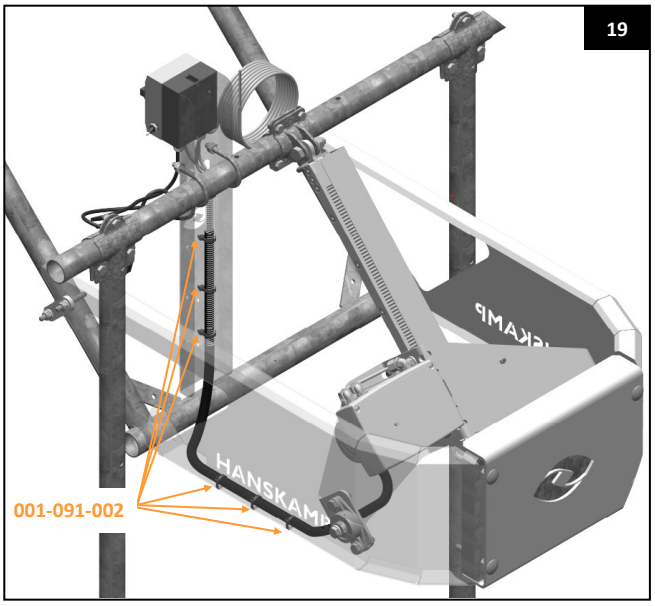

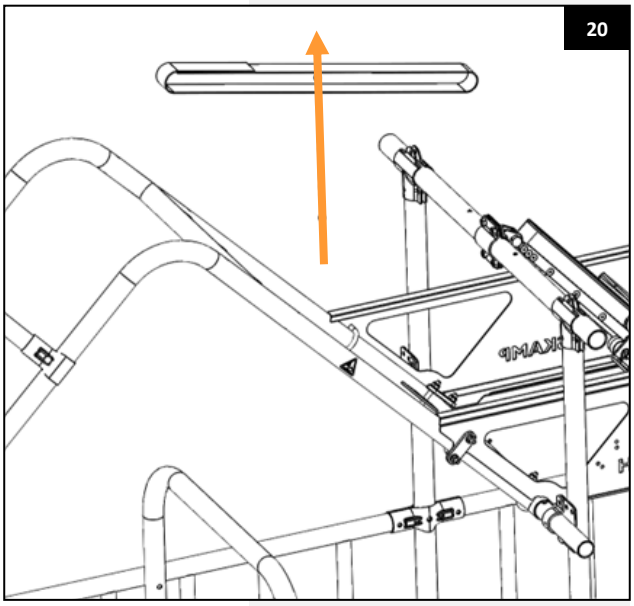

7. Remove the tension strap that is holding the moving element in the raised position.

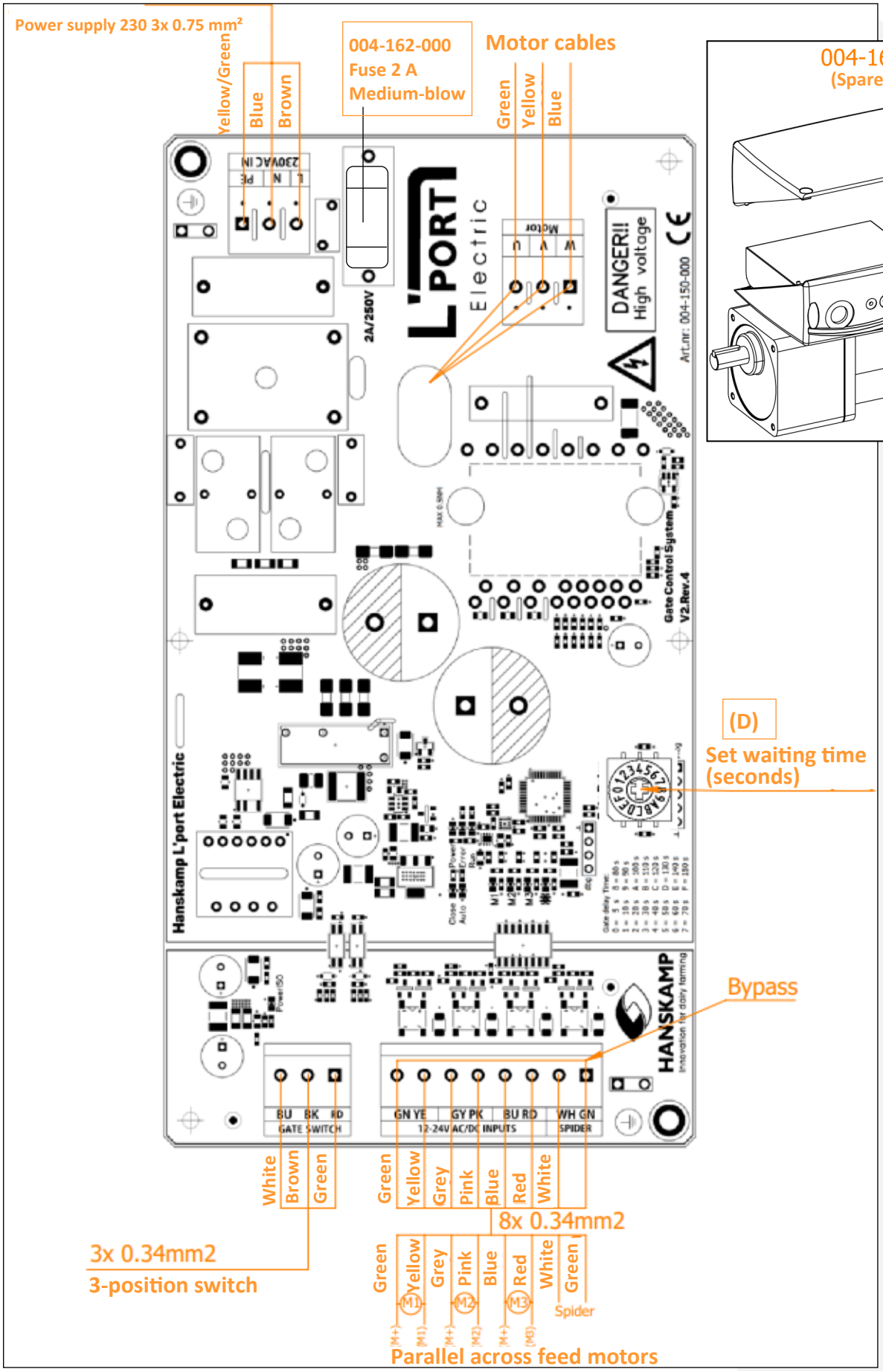
Power supply 230 3x 0.75 mm²
Yellow/Green
Blue
Brown
004-162-000
Fuse 2 A
Medium-blow
Motor cables
Green
Yellow
Blue
004-162-000
(Spare fuse)
(D)
Set waiting time
(seconds)
Bypass
White
Brown
Green
Green
Yellow
Grey
Pink
Blue
Red
White
8x 0.34mm2
3x 0.34mm2
3-position switch
Green
Yellow
Grey
Pink
Blue
Red
White
Green
Spider
Parallel across feed motors

Operation

By means of the 3-position switch (F), a selection can be made between L'port Electric open (Open), L'port Electric closed (Close) or automatic (Auto).

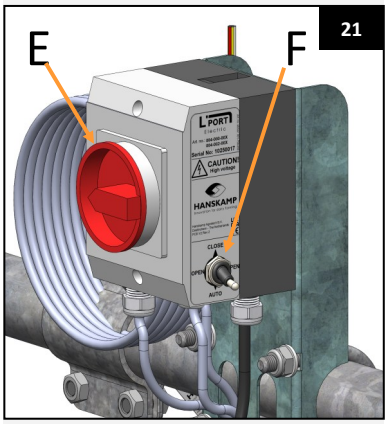

In the automatic position, the L'port Electric closing gate will close as soon as the feed motor is powered. The gate will then reopen after a set delay period. This delay period is reset each time the feed motor is powered again.

The delay period can be adjusted using the 14-position switch (page 14, D). The setting is in seconds. This switch is located on the PCB and is accessible by removing the cover, which is secured by four screws.

The delay period should be longer than the total interval time of the feed types being used. Recommended setting: interval time + 25 seconds.

This means

For the brands DeLaval, Fullwood, Insentec, Hokofarm and GM, it is recommended to set the time to 40 seconds (position 4). For a Nedap VC control system, the rule is: add together the interval times of the feed types used + 25 seconds. So, for one feed type: 40 seconds (position 4); for two feed types: 60 seconds (position 6) (rounded down), etc.

Explanation position switch (page 14, D) delay time
Time setting in sec.

0 = 05 sec.	A = 100 sec.
1 = 10 sec.	B = 110 sec.
2 = 20 sec.	C = 120 sec.
3 = 30 sec.	D = 130 sec.
4 = 40 sec.	E = 140 sec.
5 = 50 sec.	F = 150 sec.
6 = 60 sec.	
7 = 70 sec.	
8 = 80 sec.	
9 = 90 sec.	

Starting/Calibrating the System

During the calibration process, the L'port Electric will determine its extreme positions by moving fully open and fully closed once. This can also be carried out manually the first time.

When the system has been without power, the extreme positions will be redefined during the first movement (both opening and closing).

1. Disconnect the system from the power supply (switch off the main isolator or un-plug the power plug).
2. Set the switch (F) to 'Open' and manually push the gate open to the upper position. Due to the counterweights, the gate should be balanced and remain open.
3. Plug the L'port Electric into a 230 V earthed mains power supply.

Warning! Always check that the immediate surroundings of the installation are free of obstacles before switching on the system.

Warning! The L'port Electric system starts the calibration process automatically, during which the system will move automatically.

4. After a start-up period of approximately 25 seconds, the L'port Electric begins the calibration process. The closing gate will move towards the 'open' position. As the gate is already in this position, it will make a number of small movements.
5. Set the switch (F) to 'Close'.
6. The L'port Electric will move to the closed position; this takes approximately 25 seconds. At the end of the movement, the gate will again make a number of small movements.
7. Set the switch (F) to the 'Auto' position; the L'port Electric will move upwards again. The system is now ready for use.

Start-up

After installation: leave the L'port Electric closing gate open for one week by setting the switch (F) to the 'Open' position. This allows the cows to become accustomed to the new installation. After this familiarisation period, the installation can be put into operation by setting the switch to the 'Auto' position.

Power failure

During a power outage, the gate will remain in the position it was in at the moment the power failure occurred. If the gate is closed while a cow is standing in the feeding station, the cow can open the gate by pushing against it.

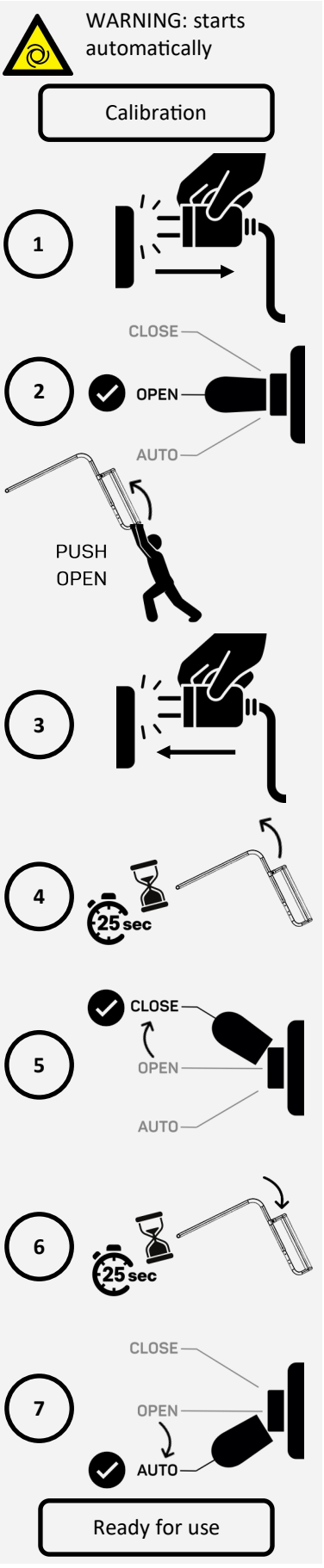

Scan for video

Important!

Ensure that the person operating the L'port Electric closing gate is always in a safe position. When the L'port Electric closing gate is in operation, no persons should be in the immediate vicinity of the gate. Under no circumstances should the gate be climbed on while it is in operation.

Maintenance

Check the L'port Electric closing gate daily for faults and wear. This can be done by testing the outputs of the drive motors and using the manual switch on the actuator. Ensure that any noise and vibrations resulting from the operation of the L'port Electric closing gate are minimised as much as possible. This can, for example, be achieved by fitting a grease nipple and applying lubricant.

Caution! Always disconnect the electrical supply to the feed station and the L'port Electric before performing any maintenance.

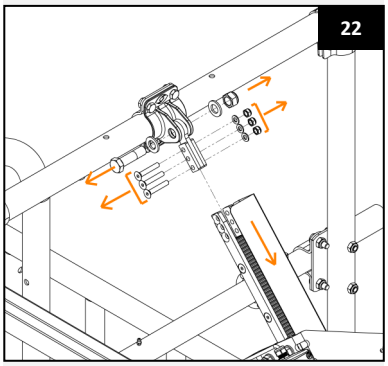

Dismantling

When dismantling, all components must be separated according to material type and disposed of through the appropriate waste processing cycle.

Caution! Always switch off the electrical power supply to the feed station before dismantling.

Overview of changes included in this installation and operating manual

No.	Issue date	Chapter(s)	Remarks
1	11/2024	All	First issue
1.1	07/2025	All	Clarifications and revisions made to illustrations
1.2	11/2025	Calibration	Calibration updated + new exploded view
1.3	12/2025	Pages 1, 25	Page 1 Change of place name. Page 25 Change of address Hanskamp.
1.4	01/2026	Pages 11, 15, 16	Page 11: New image. Pages 15 and 16: updated, new page inserted, and revised calibration.
1.5	04/2026	Pages 10, 12, 25, 26	Page 10 inserted due to new text and illustrations. Page 12: Fig. 13A has been modified to clarify where the eye must be positioned in the clamp. Page 25: 3-position switch changed from 001-583-001 to 001-583-100. Page 26: Illustration of the 3-position switch now updated with Wago connectors and new article number 001-583-100.

Warranty Limitations

Excluded from the warranty are any costs or expenses resulting from:

- Improper use of the equipment that does not comply with the specifications in the installation and operating instructions;
- Interventions carried out by technicians who have not been authorised by Hanskamp to perform specific operations;
- Incidents such as freezing, ice, fire, flooding, inundation, or any other form of extreme water damage, as well as lightning strikes;
- Defects in the electrical system or earthing;
- Damage to the electrical system caused by vermin or similar factors.

The warranty does not cover consequential damage that is not directly related to the machine itself. All systems are tested. In the event of a malfunction, however, Hanskamp cannot be held liable for any consequential damage.

Copyright and Disclaimer
The information in this publication is intended for informational purposes only and does not constitute a sales offer. The actual products may differ from those shown in the images. References to brand names and/or products in this manual are for identification purposes only. The company names and product names mentioned in this manual are trademarks of their respective owners. No part of this publication may be reproduced or made public without prior written permission from Hanskamp AgroTech BV. Although this publication has been compiled with the greatest possible care, Hanskamp AgroTech BV accepts no liability for any damage that may arise from errors or omissions in this publication. The Dutch-language installation and operating instructions constitute the original manual. Translations into other languages are based on the Dutch version as the source document. Hanskamp AgroTech BV accepts no liability for discrepancies between the translations. In case of doubt regarding the content or accuracy of the translated installation and operating instructions, the Dutch version shall prevail.

4. FAQ

Common Problem	Possible Cause	Solution
Gate makes a squeaking noise at the hinge tube.	No grease/lubrication between the hinge tube and moving element.	Fit a grease nipple and apply lubricant.
Gate opens immediately after feeding.	Wait time is incorrectly set.	Set the correct wait time (see p. 15).
The work switch is on but the gate does not respond.	Fuse is blown. Gate also does not respond to manual operation and the LED on the control board housing is off.	Check the cable for damage or incorrect connection. Replace the fuse (004-162-000, 2 A, 250 V, Medium-blow).

Troubleshooting

The error LED on the PCB of the L'port Electric always flashes four times in succession when a fault occurs. The flash pattern indicates the type of fault. The LED can blink either long or short. A long blink indicates the fault's position. For example, the pattern LONG-SHORT-SHORT-SHORT corresponds to fault position 1. There are five positions that may indicate a fault.

RUN LED	
LED Indication	**Cause**
Fast blinking (100 ms)	Not calibrated - calibration in progress
Steady on	Calibration complete - gate timing active
Slow blinking (500 ms)	Idle - other situations

Danger! The PCB of the L'port Electric is live and contains hazardous voltage.

Error LED (Red)	Possible Cause	Solution
Fault at Position 1 Blink Pattern: LONG-SHORT-SHORT-SHORT — - - -	Motor has overheated and the thermal protection is active.	The system automatically switches off the motor for 5 minutes and will then restart automatically once the temperature is safe.
Fault at Position 2 Blink Pattern: SHORT-LONG-SHORT-SHORT - — - -	The system detects no movement for 5 seconds. A gear in the drive may be defective.	Check the drive gear. The motor will remain off until a change in rotation direction is detected. The rotation direction can be changed using the switch on the PCB housing. If the fault persists after changing the rotation direction, the drive is defective.
Fault at Position 3 Blink Pattern: SHORT-SHORT-LONG-SHORT - - — -	The motor is being driven but no current is detected. There may be a fault in the wiring for motor control.	Check the wiring. The motor will remain off until a change in rotation direction is detected. The rotation direction can be changed using the switch on the PCB housing. If the fault persists after changing the rotation direction, the wiring is defective.
Fault at Position 4 Blink Pattern: SHORT-SHORT-SHORT-LONG - - - —	The system cannot communicate with the angle/position sensor. There may be a fault in the PCB.	Check the PCB.
Fault at Position 5 Blink Pattern: Continuous, no pattern (blinking with a period of 1 second)	No application loaded on the control board.	Return to Hanskamp for reprogramming of the control PCB.

Declaration of incorporation of complete machines IIA

According to Annex VIIA of the Machinery Directive 2006/42/EC, for partly completed machinery

We,
Hanskamp AgroTech BV
Broekstraat 17
7009 ZB Doetinchem
The Netherlands

Authorised compiler(s) of the technical dossier:

H.J. Hanskamp,

Hereby declare, under our sole responsibility, that the product:

L'port Electric (24VAC & 24VDC), type numbers 004-080-000 & 004-082-000,
Universal closing gate for securing feed boxes, Conversion kit L'port Electric Universal & XL closing gate, type numbers 004-080-001 & 004-082-001,

to which this declaration relates, is in conformity with the provisions of the following directive(s):

- Machinery Directive 2006/42/EC

The product also complies with the provisions of the following standards:

- NEN-EN-ISO 12100
- NEN-EN-ISO 4414
- NEN-EN-IEC 60204-1
- NEN-EN-IEC 13849-1

If the L'port Electric closing gate is not connected, and the prescribed safety measures are not applied, this Declaration of Conformity becomes void and no rights can be derived from this declaration.

Doetinchem, The Netherlands, 26-05-2025 H.J. Hanskamp



Appendices

Hanskamp can supply the following types of closing gates for feed stations:

004-080-000	L'port Electric universal closing gate, suitable for all feed boxes.
004-082-000	L'port Electric XL closing gate (extended length), suitable for DeLaval FSC40(0), FP200 & Lely Cosmix S feed boxes (without red housing).

Specifications	
Power Supply	230 V AC
Nominal Current	0.75 A
Internal Fuse	2 A MT

Dimensions

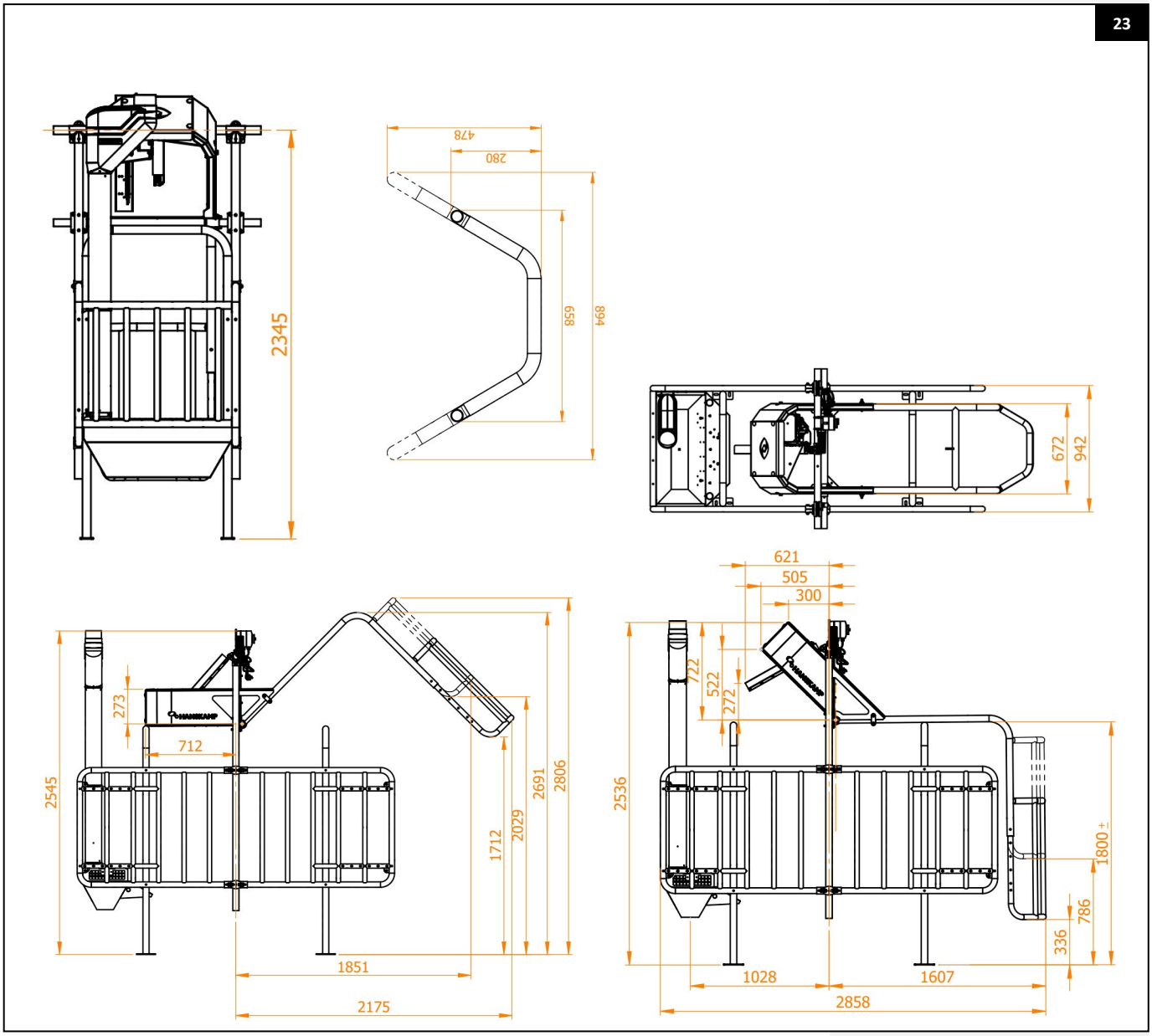

Caution! Dimensions refer to the height of the anti-jump gate (example height shown in the drawing: 1800 mm). For accurate dimension calculations, the height of the anti-jump gate in the actual installation must be taken into account.

Spare parts

For maintenance or any other reason, it is possible to order individual spare parts from your supplier. Always use the article numbers as indicated on the drawings below.

24

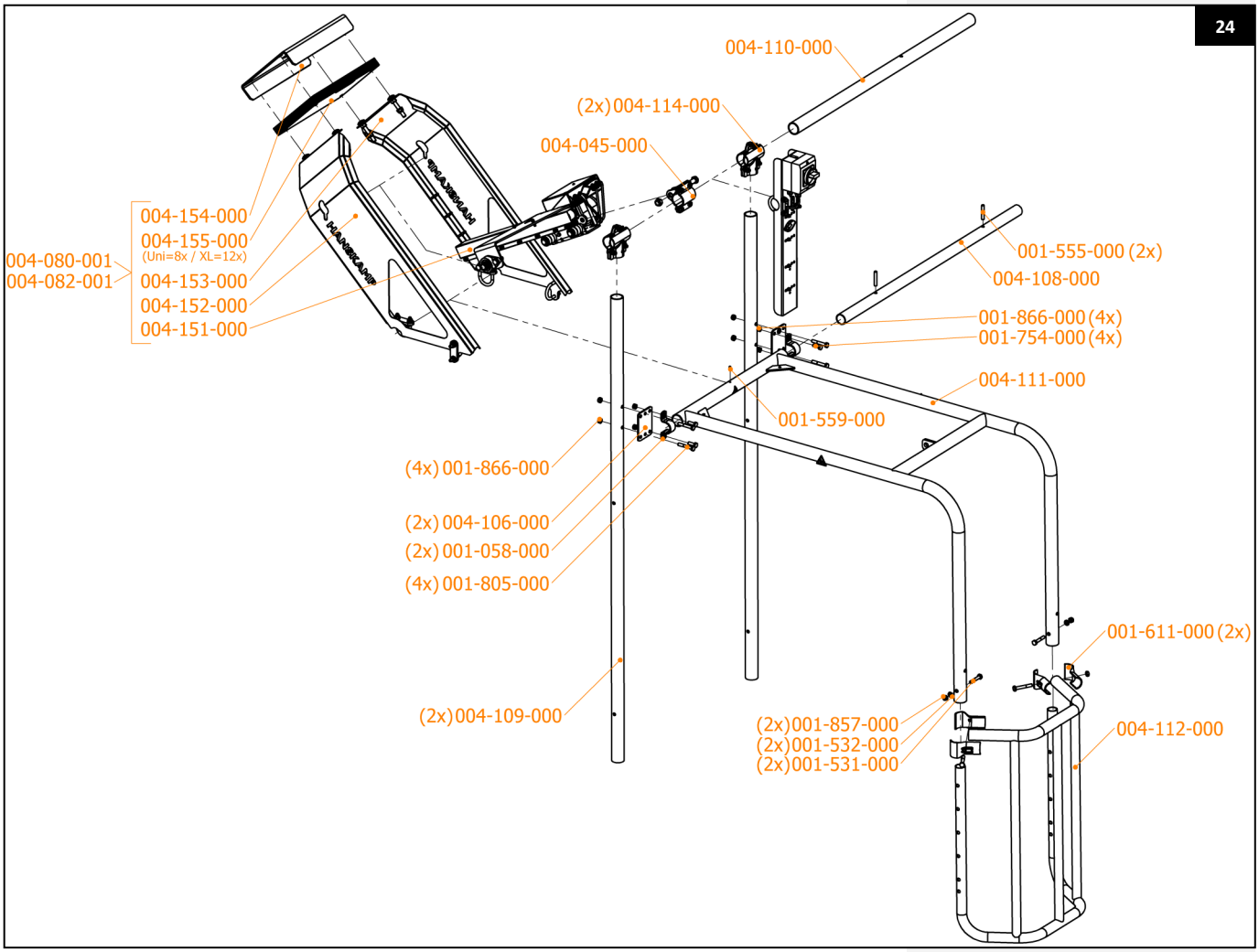

25

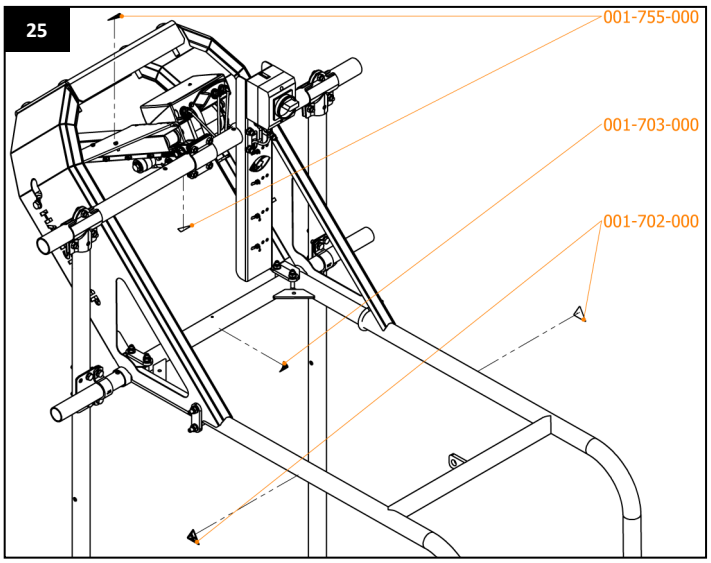

26

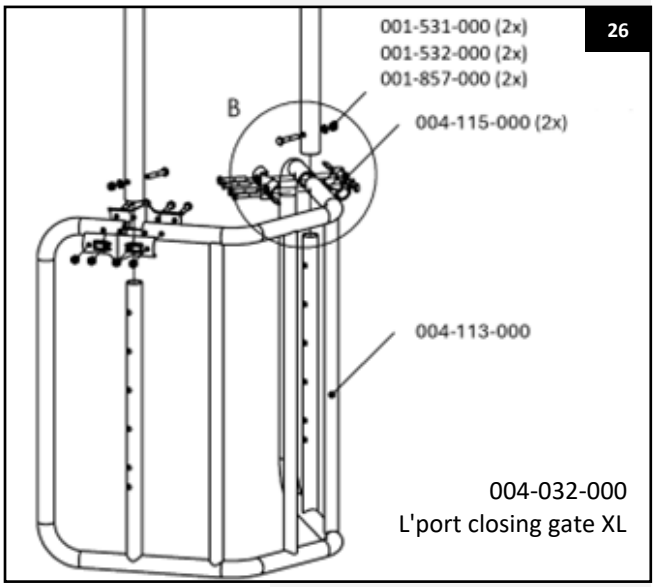

004-032-000
L'port closing gate XL

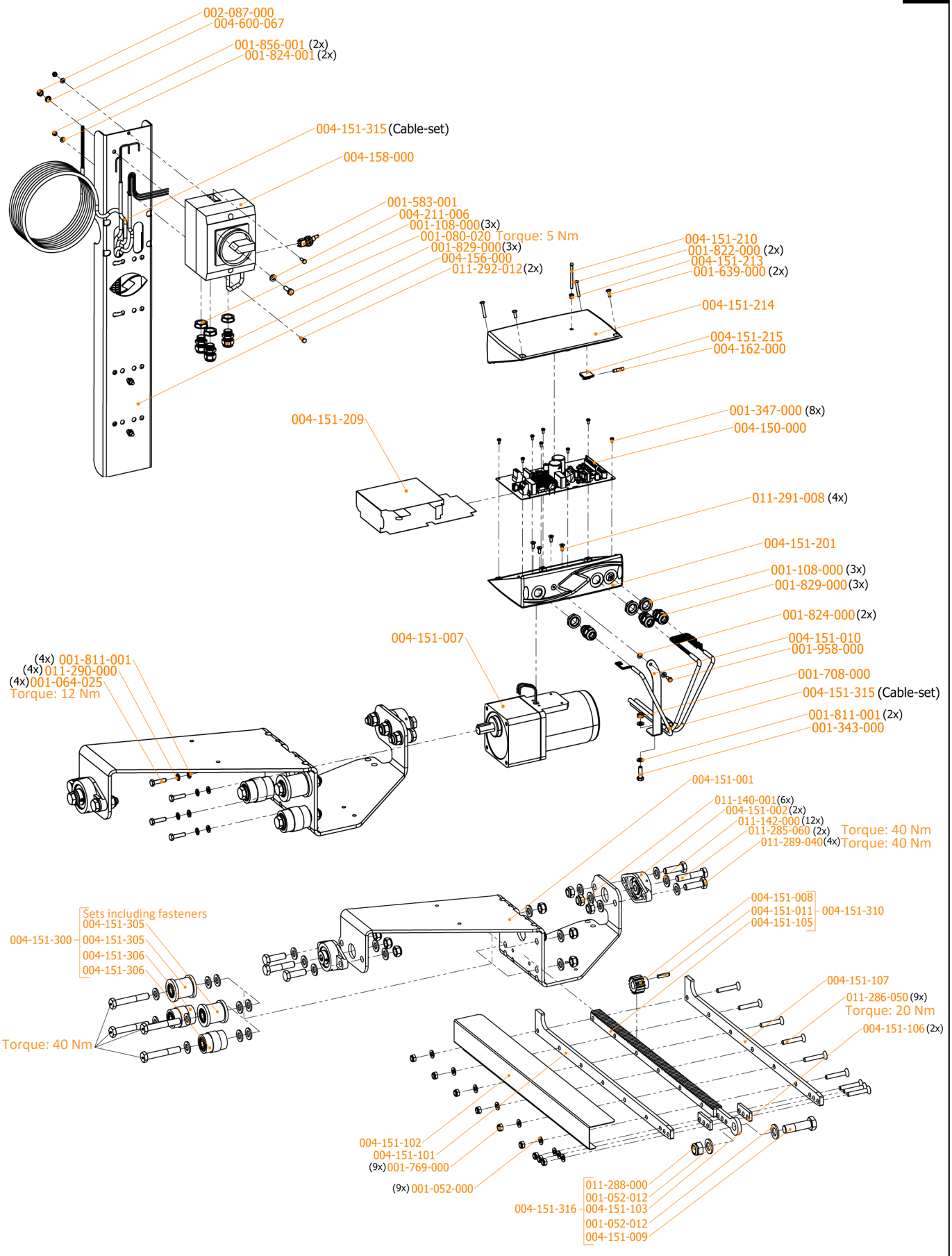
002-087-000
004-600-067
001-856-001 (2x)
001-824-001 (2x)
004-151-315 (Cable-set)
004-158-000
001-583-001
004-211-006
001-108-000 (3x)
001-080-020 Torque: 5 Nm
001-829-000 (3x)
004-156-000
011-292-012 (2x)
004-151-210
001-822-000 (2x)
004-151-213
001-639-000 (2x)
004-151-214
004-151-215
004-162-000
004-151-209
001-347-000 (8x)
004-150-000
011-291-008 (4x)
004-151-201
001-108-000 (3x)
001-829-000 (3x)
001-824-000 (2x)
004-151-010
001-958-000
001-708-000
004-151-315 (Cable-set)
001-811-001 (2x)
001-343-000
004-151-007
(4x) 001-811-001
(4x) 011-290-000
(4x) 001-064-025
Torque: 12 Nm
004-151-001
011-140-001 (6x)
004-151-002 (2x)
011-142-000 (12x)
011-285-060 (2x)
Torque: 40 Nm
011-289-040 (4x)
Torque: 40 Nm
004-151-008
004-151-011
004-151-105
004-151-310
Sets including fasteners
004-151-300
004-151-305
004-151-305
004-151-306
004-151-306
Torque: 40 Nm
004-151-107
011-286-050 (9x)
Torque: 20 Nm
004-151-106 (2x)
004-151-102
004-151-101
(9x) 001-769-000
(9x) 001-052-000
011-288-000
001-052-012
004-151-316
004-151-103
001-052-012
004-151-009

004-061-000 L'port Fastener Spare Parts Kit		
Art. no.	**Description**	**Quantity**
001-376-000	Grip-seal bag 150x200 mm 50µ transparent	1x
001-531-000	Bolt M10x60 DIN 931 A2	2x
001-532-000	Washer M10 A2 DIN 125/1A	2x
001-555-000	Tension pin 10x60 heavy-duty DIN 1481, stainless steel A2	2x
001-559-000	Grease nipple M6x1 DIN 71412 sw7H1 electro-galvanized	1x
001-702-000	Warning sticker Hand entrapment hazard	2x
001-703-000	Warning sticker Impact hazard	1x
001-754-000	Tap bolt M10x20 mm DIN 933 8.8 electro-galvanized	4x
001-805-000	Bolt M10x70 DIN 931 8.8 electro-galvanized	4x
001-857-000	Self-locking nut M10 A2 DIN 958 coated GL	2x
001-866-000	Self-locking nut M10 DIN 985 8.8 electro-galvanized	8x
004-127-000	Round insert 1¼" (Ø42.4) grey	2x
004-206-000	Round insert 1 7/8" x 1.0-3.0 mm	2x

004-161-100 Bag of fixing materials		
Art. no.	**Description**	**Quantity**
000-993-000	LDPE plastic bag transparent	1x
001-052-012	Washer M16 (30x3) DIN 125A A2	2x
001-091-002	Ty-rap 4.8x370 mm, black	20x
001-707-000	Washer M10 DIN 125A Electro-galvanised	12x
001-866-000	Self-locking nut M10 8.8 Electro-galvanised	12x
004-132-000	Wire bracket 1½" galvanized, M10	6x
004-157-000	Wire bracket plate 8 mm	4x
011-137-000	Nut M12 A2 DIN 934 ve200	4x
011-140-001	Self-locking nut M12 DIN 985 A2	6x
011-142-000	Washer M12 DIN 125 A2	12x
011-285-060	Bolt M12x60 DIN 931 A2	2x
011-287-080	Cap screw M12x90 DIN 603 A2, full thread	4x
011-288-000	Self-locking nut M16 DIN 985 A2	1x

004-056-000 & 004-058-000 Parts Bag - L'port Electric Closing Gate Universal & XL		
Art. no.	**Description**	**Quantity**
000-993-000	LDPE plastic bags transparent 30 x 42 cm, thickness 0.10 mm	1x
001-058-000	Full hood bracket 1¼" hot-dip galvanized	2x
001-611-000	2-piece T-clamp 1½" x 1¼" including 1 bolt M10x70 *	2x
004-045-000	Double 4-hole half clamp complete hot-dip galvanized for L'port	1x
004-061-000	L'port fastener spare parts kit	1x
004-106-000	Pipe mounting plate LP galvanized	2x
004-109-000	Standing leg tube 1½" x 3.25 l=1976 mm	2x
004-114-000	3-hole T-clamp 1½" x 1½" galvanized	2x
004-115-000	Double T-clamp 1½" x 1¼" galvanized **	2x

* Item only included in L'port Electric Universal

** Item only included in L'port XL Electric Extension Gate

004-160-000 Box SET 1		
Art. no.	**Description**	**Quantity**
004-151-000	Actuator, with control, rack, bearings, and mounting bracket	1x
010-080-000	Installation and operating instructions	1x
010-401-000	Box SET 1 for actuator	1x

004-161-000 Box SET 2		
Art. no.	**Description**	**Quantity**
004-151-009	Hinge bolt M16x60 (SPECIAL)	1x
004-152-000	Left side plate	1x
004-153-000	Right side plate	1x
004-154-000	Weight - rear plate with logo	1x
004-161-100	Bag of fixing materials SET2	1x
010-402-000	Box SET 2 for actuator	1x

004-080-001 & 004-082-001 Conversion Kit Uni + XL		
Art. no .	**Description**	**Quantity**
004-155-000	Weight with handle	8x* 12x**
004-160-000	Box SET 1 with actuator and cable	1x
004-161-000	Box SET 2 with side plates and fixing materials	1x

004-151-000 Actuator		
Art. no.	Description	Quantity
001-108-000	Locknut M16	6x
001-164-000	Power cable 5 m with 230V plug	1x
001-593-000	Cable LiYY 8x0.34 mm, length 8 m	1x
001-758-000	Sticker L'port Electric closing gate	1x
001-829-000	Cable gland M16x1.5	6x
004-150-000	PCB L'port Electric	1x
004-151-002	Bearing block with grease nipple	2x
004-151-305	Upper guide wheel	2x
004-151-306	Lower guide wheel	2x
004-151-007	Motor with 3-phase gearbox	1x
004-151-310	Rack with pinion and key	1x
004-151-201	Lower housing	1x
004-151-315	Wiring harness with spiral wrap	1x
004-151-209	Clear protective cover for PCB	1x
004-151-210	Light guide for LED PMMA	1x
001-583-100	3-position switch	1x
004-151-213	Black spacer for light guide	1x
004-151-214	Upper housing including seal	1x
004-151-215	Fuse holder, self-adhesive, black	1x
004-158-000	Control switch	1x
004-162-000	Fuse, medium-blow 2A 250V	1x
001-052-000	Washer M8 (8.4) DIN 125A A2	9x
001-064-025	Bolt M6x25 DIN 933 A2	4x
001-080-020	Bolt M6x20 DIN 933 electro-galvanized 8.8	1x
001-342-001	Cable tie 3.6x140 mm, white	2x
001-342-002	Cable tie 3.6x200 mm, black	1x
001-343-000	Bolt M6x20 A2 DIN 933	3x
001-347-000	Metal screw M3x6 A2 DIN 7985, Phillips head	8x
001-639-000	Metal screw M4x10 A2 DIN 7985	2x
001-708-000	Self-locking nut M6 A2 DIN 985	3x
001-769-000	Self-locking nut M8 A2 DIN 985	9x

Continuation 004-151-000 Actuator		
Art. no.	Description	Quantity
001-811-001	Washer M6 DIN 125A A2	6x
001-822-000	Metal screw M4x25 A2 DIN 7985	2x
001-824-000	Washer M4 A2 DIN 125	2x
001-824-001	Washer M4 DIN 125 Electro-galvanised	2x
001-856-001	Self-locking nut M4 DIN 985 Electro-galvanised	2x
001-958-000	Hex bolt M4x10 mm A2 DIN 933	1x
002-087-000	Self-locking nut M6 Electro-galvanised DIN 985	1x
004-151-001	Actuator plate 6 mm stainless steel	1x
004-151-010	Cable clamp stainless steel 304	1x
004-151-101	Side plate for rack 8 mm stainless steel	1x
004-151-102	Rack guard/shield	1x
004-151-103	Mounting eye for rack	1x
004-151-106	Filler plate for rack	2x
004-151-107	Side plate for rack, 8 mm stainless steel	1x
004-156-000	Control switch plate	1x
004-211-006	Washer M6 DIN 125A Electro-galvanised	1x
004-600-067	Spring washer M6 DIN 6798 EV	1x
011-140-001	Self-locking nut M12 DIN 985 A2	10x
011-142-000	Washer M12 DIN 125 A2	28x
011-285-060	Bolt M12x60 DIN 931 A2	2x
011-285-080	Bolt M12x80 DIN 931 A2	4x
011-286-050	Socket head cap screw M8x50 DIN 7991 A2	9x
011-289-040	Bolt M12x40 DIN 933 A2	4x
011-290-000	Spring washer M6 DIN 127B A2	4x
011-291-008	Socket head cap screw M4x8 DIN 7991 EV 8.8	4x
011-292-012	Bolt M4x12 DIN 933 EV 8.8	2x

Spare parts

004-151-300 Set of four running wheels

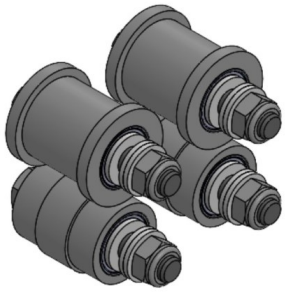

004-151-305 2x
upper guide wheel

004-151-306 2x
lower guide wheel

004-162-000 Fuse Ø5x20 medium-blow 2A 250V



004-151-315 Wiring harness with power, signal, and switch cables, including spiral



004-151-310 Rack with pinion and key

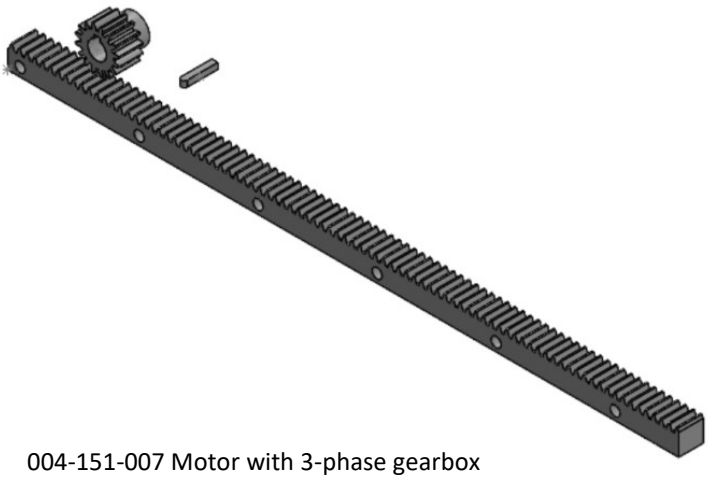

004-151-316 Eye with bolt and nut for mounting rack to L'port closing gate

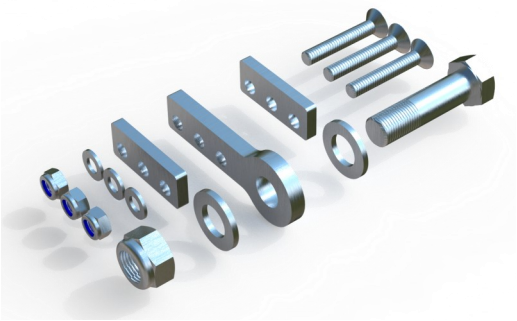

004-151-007 Motor with 3-phase gearbox

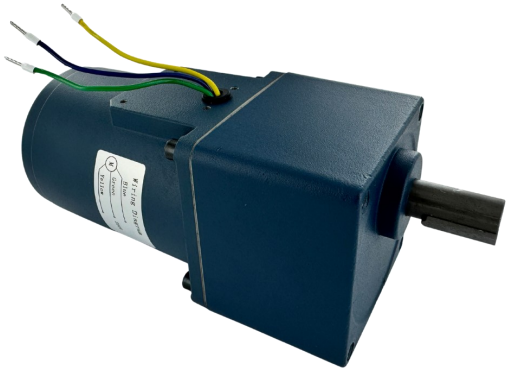

004-158-000 Work switch



001-583-100 3-position switch

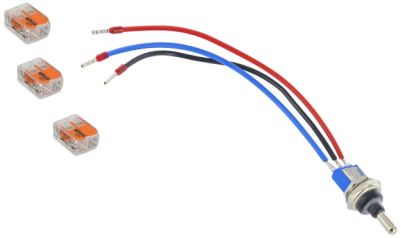

004-150-000 L'port Electric PCB



Hanskamp AgroTech BV
Xenonstraat 6
7031 HX Wehl
The Netherlands
Tel: +31 (0)314 - 393 797
www.hanskamp.com

Also take a look at: