FeedStation 42000

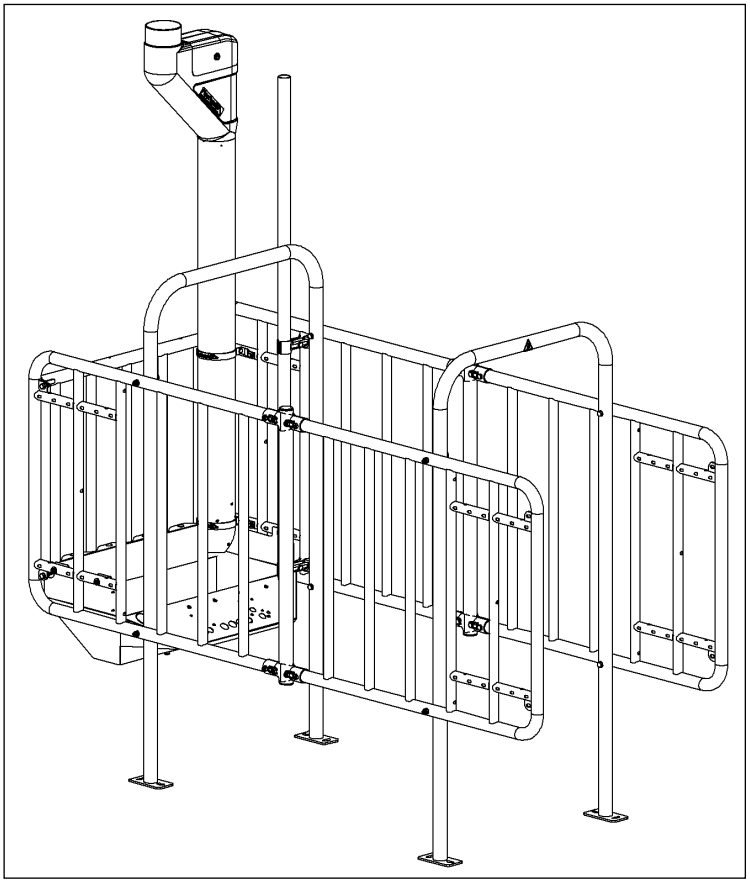

Voerstation
Out of parlour feeder
Futterstation
Distribution alimentation concentré (DAC)

Installation and Operating Instructions **EN**

HANSKAMP
Innovation for dairy farming

Article number: 010-084-000

Date: January 2026
Version 4.0 - Translation of original Installation and Operating Instructions

Wehl,
The Netherlands
www.hanskamp.com

Foreword

Contents of the installation and operating instructions

These installation instructions contain the necessary information for the correct installation and operation of the FeedStation Walk-In. Study this information carefully and make sure you fully understand it before configuring the FeedStation. Failure to follow these instructions may result in damage to the equipment. Please contact Hanskamp if any information is unclear or if you require additional information.

All information in these installation instructions has been compiled with care. Hanskamp accepts no liability for any errors or omissions in these installation instructions. The recommendations are intended as guidelines. All instructions, illustrations and specifications are based on the most recent information available at the time of publication. Your FeedStation Walk-In may be equipped with improvements, features or options that are not described in these instructions.

Applicability

The table below shows the model number of the FeedStation Walk-In to which these installation instructions apply.

Model designation

Model	Type number
FeedStation Walk-In	42000

Contact details of the milking technology dealer

We recommend that you record the name, telephone number and email address of your milking technology dealer in the table below. This ensures that you always have quick access to the correct contact details.

Name	
Address	
Phone number	
E-mail	

1. Introduction

The FeedStation Walk-In feed station is suitable for any dairy barn and can be connected to any feed computer. Installation of the FeedStation Walk-In is quick and straightforward. Multiple FeedStations can easily be linked together in the barn. This can be done at relatively low cost, as only one side fence is required for each additional FeedStation.

The information in this manual is intended for dairy farmers and technicians.

- Dairy farmers can use the information to test and calibrate the FeedStation Walk-In or to display reports.
- Technicians can use the information to install and setup the FeedStation Walk-In.

2. Safety

2.1 Introduction

The Safety Warning symbol indicates important safety messages on the FeedStation Walk-In, L'port and T'port and in this manual. Pay close attention whenever you see this symbol: there is a risk of personal injury or fatal injury. Always follow the instructions given in the safety message(s).



Safety Warning Symbol

2.2 Warning texts

Pay attention to the use of the warning terms **CAUTION** and **DANGER** in safety messages. The following guidelines apply to these warning terms:



Caution! Indicates a potentially hazardous situation which, if not avoided, may result in minor personal injury or damage to equipment or surroundings.



Danger! Indicates a potentially hazardous situation which, if not avoided, may result in serious or fatal injury.

2.3 Safety instructions

You are responsible for the safe operation and maintenance of your FeedStation Walk-In. You must ensure that you, and everyone who operates, maintains, or works in the vicinity of the FeedStation, are familiar with all safety information in these installation instructions.

You are the key to safety. Good safety practices protect you and the people around you. Use these practices as part of your safety programme. Make sure that everyone who uses, maintains, or works near the FeedStation is familiar with these safety measures. Do not risk injury or fatal accidents by ignoring safety instructions.

- Owners of the FeedStation Walk-In must train users before the feed station is put into operation. This training must be repeated at least once per year.
- The user must read, understand, and follow all safety and operating instructions in this manual.
- A person who has not read and understood these safety and operating instructions must not operate the FeedStation.
- Do not make any modifications to the equipment. Unauthorised modifications may negatively affect operation, shorten the service life of the equipment, and/or cause personal injury.
- Use only original spare parts and ensure that they are installed by authorised technicians.

2.3.1 General Safety

- Make sure you have read and understood the manual and all safety instructions before connecting the power supply to operate or adjust the FeedStation Walk-In, or before switching it off for maintenance.
- Only trained personnel are permitted to operate the FeedStation Walk-In.
- Install all guards and safety devices before putting the FeedStation Walk-In into operation.
- Wear appropriate protective clothing and equipment (PPE).
- Before cleaning or performing maintenance on the FeedStation Walk-In, switch off and isolate the electrical supply to the FeedStation. Also depressurise the compressed air supply.
- Ensure that telephone numbers for medical emergency assistance in your region are readily available.
- Contact your milking technology dealer if you have any further questions.
- Regularly discuss all safety-related topics with all users (at least once per year).

2.3.2 Electrical Safety

- Only a qualified electrician may install the power supply for the FeedStation Walk-In.
- Check that the electrical earthing of the electrical system and all parts of the FeedStation Walk-In comply with applicable local rules and regulations.
- Replace electrical wiring, cable sheaths, switches and components immediately if they are damaged.
- Isolate the electrical power supply before opening the cover and performing any work on the electrical system.

2.3.3 Safety during Installation

- Make sure you have read and understood the instructions in this manual.
- Check that the FeedStation Walk-In has been installed correctly, as described in these installation instructions.

2.3.4 Safe Operation

- Make sure you have read and understood the manual and all safety instructions before connecting the power supply to operate or adjust the FeedStation Walk-In, or before switching it off for maintenance.
- Only trained personnel are permitted to operate the FeedStation Walk-In.
- Before cleaning or carrying out maintenance on the FeedStation Walk-In, switch off the electrical power supply to the FeedStation by unplugging it from the mains socket. Also depressurise the compressed air supply.
- Install the cover and other protective devices before putting the FeedStation Walk-In into operation.
- Keep hands, feet, hair and clothing away from live parts.
- Keep all unauthorised persons, especially young children, away from the FeedStation Walk-In at all times.
- Before applying power to the FeedStation Walk-In, ensure that all components are securely fastened and that all cables and fixings are in good condition.
- Contact your milking technology dealer if you have any further questions.

2.3.5 Safety during Maintenance

- Make sure you have read and understood the manual and all safety instructions before connecting the power supply to operate or adjust the FeedStation Walk-In, or before switching it off for maintenance.
- Only trained personnel are permitted to carry out maintenance on the FeedStation Walk-In.
- Before cleaning or performing maintenance on the FeedStation Walk-In, switch off the electrical power supply.
- Wear protective clothing and safety goggles when working on the electrical system.
- Ensure that all guards and safety devices are reinstalled and correctly fitted when you have finished the maintenance work.

2.3.6 Safety Messages

- This chapter contains the general safety messages. Specific safety messages, where potential hazards may arise if the procedures or instructions are not followed, are included in the relevant sections of this manual.

3. Installation and Operating Instructions

General description
The Hanskamp FeedStation is a universal feed station with a modular setup, developed to provide cows with their individual portions of concentrates. The FeedStation is fitted with PipeFeeder dosing units and can be expanded to accommodate up to four different feed types (one PipeFeeder per feed type). In addition, the L'port closing gate (art. no. 004-030-000) can be easily incorporated into the FeedStation (fig. 1).

These installation instructions will guide you through the installation of the FeedStation. Always read and follow all instructions and safety rules. Sample installations can be found at www.hanskamp.com. See the appendix for the order numbers and names of the various parts.

Transport and storage
The FeedStation Walk-In is shipped on a pallet. This pallet is completely sealed and the corners are taped to prevent damage. The FeedStation is stored in the same way.

Caution! Always use suitable handling equipment (forklift, pallet fork, pallet truck, etc.) to move the pallet.

Caution! Parts may fall from the pallet when unpacking.

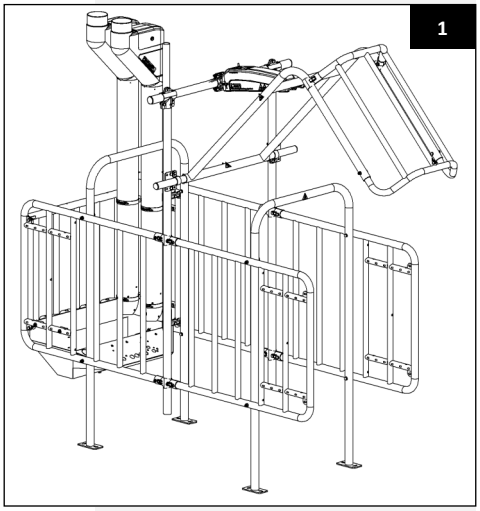
1

The pallet includes (for one FeedStation) 042-011-000:

4x art. no. 004-200-000 Side fence FS
1x art. no. 004-201-000 Connecting fence FS
2x art. no. 004-202-000 Frame FS
1x art. no. 004-203-000 Feed trough FS
1x art. no. 004-205-000 Set of fixing materials FS
1x art. no. 004-208-000 Cable conduit
1x art. no. 27000/28000 PipeFeeder*
0x art. no. 004-207-000 Set of fixing materials per feed type**

* Variable depending on the number of feed types ordered
** Variable depending on the number of feed types ordered, starting from two

Safety stickers

The user and installer are responsible for the safe operation and maintenance of the FeedStation Walk-In. To ensure safety around the FeedStation Walk-In, safety stickers are used. Later in these installation and operating instructions, you can see which sticker should be placed where (e.g. fig. 2).

Applying the stickers

- Ensure that the surface is dry and clean.
- Ensure that the surface temperature is at least 5 °C.
- Find the correct position for the sticker.
- Remove a small part of the backing film.
- Place the sticker on the surface and press down a small part of the adhesive layer.
- Carefully remove the backing film and press down the remainder of the sticker.
- Remove any air bubbles with a needle and use the backing film to smooth the sticker.

Maintenance of the stickers

- Keep safety stickers clean and clearly legible. Clean the stickers with soap and water. Do not use solvents and/or abrasive agents that could damage the safety stickers.
- Replace any missing or unreadable safety stickers.
- Safety stickers are available from Hanskamp. Always use the article numbers in correspondence.



Sticker warning risk of impact
001-703-000

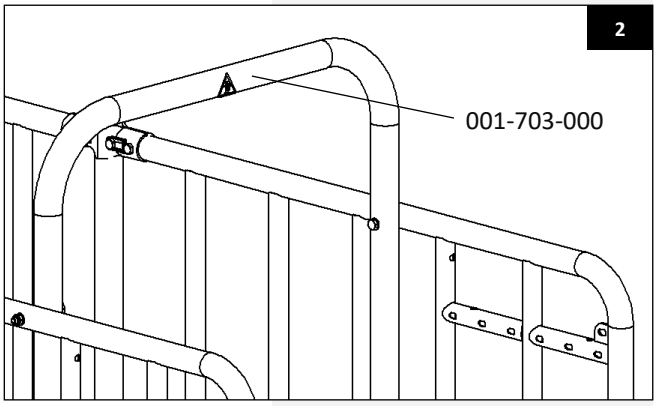

Assembly

1. Check that all components are present by referring to the parts list.

Please note! No electrical components are supplied for operating the FeedStation Walk-In in combination with the associated PipeFeeders.

Please note! The FeedStation must be installed on a correctly constructed and stable surface.

Please note! It must not be possible for cows to lie down in the exit route of the FeedStation.

2. First assemble the side fences (art. no. 004-200-000). Use the double T-clamps (art. no. 004-115-000) with the upright tube (art. no. 004-204-000) positioned between them (fig. 3).

Without L'port = 004-204-000
With L'port = 004-109-000

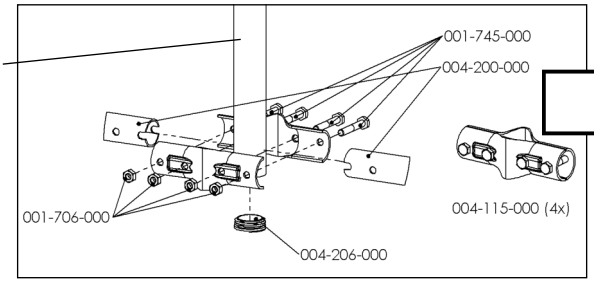

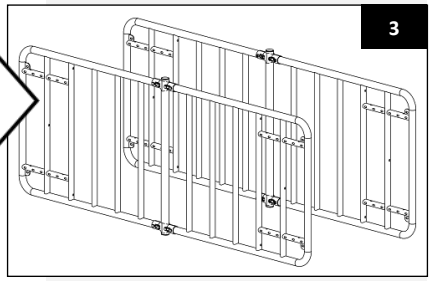

3. Install one of the two frames (art. no. 004-202-000) on the feed trough side, using the specified fixing materials (fig. 4).

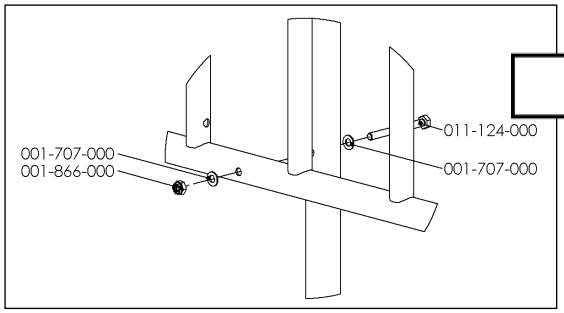

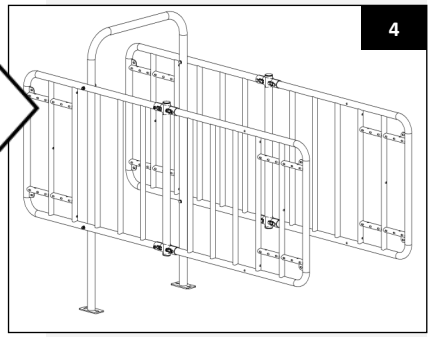

4. Attach the connecting fence (art. no. 004-201-000) to both side fences (fig. 5). The required fixing materials are supplied.

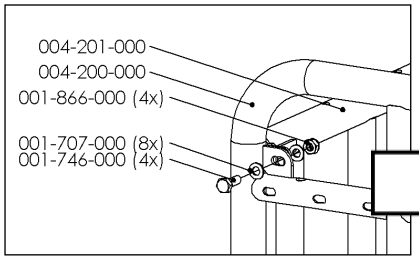

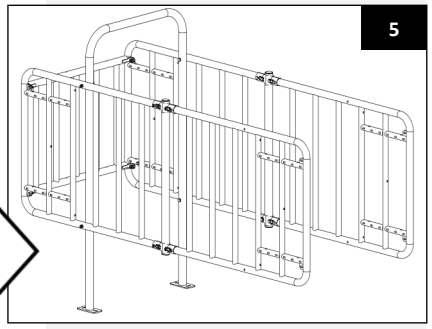

5. Position the second frame between the side fences and secure it using the same fixing materials as used in step 3 (fig. 6).

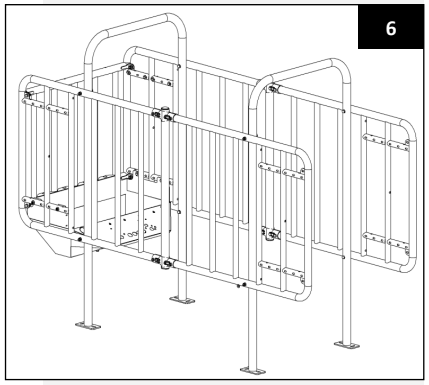

Please note! Ensure that the side fences and frames are level (both vertically and horizontally) before tightening all fixings securely.

6. Position the feed trough (art. no. 004-203-000) between the side fences and secure it to the connecting fence and the side fences (fig. 7). The required fixing materials are supplied.

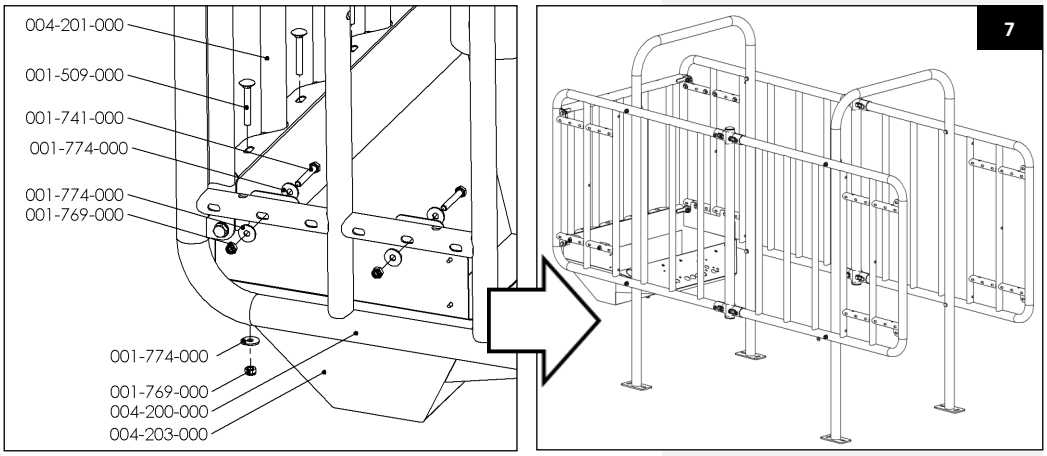

7. Install the M8 carriage bolt (art. no. 001-508-000) with the M8 lock nut (art. no. 001-769-000) in the feed trough. By pressing the bolt upwards, any moisture can easily drain from the feed trough (fig. 8).

Please note! Do not fully tighten the lock nut; otherwise the carriage bolt cannot be pressed upwards and the cleaning function will be lost.

8. Attach the cable conduit (art. no. 004-208-000) to the side fence using the supplied parallel clamp. Cut out the round knock-out hole in the feed trough using side cutters and insert the cable conduit into the opening. Secure the parallel clamp with the second M10 × 55 bolt to prevent rotation or movement. The cable from the PipeFeeder can be routed through this conduit.

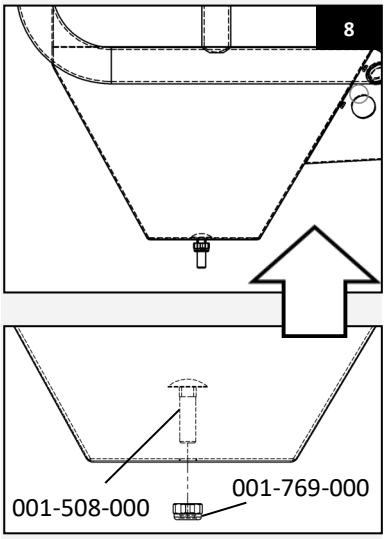

Assembly of cable conduit (art. no. 004-208-000)

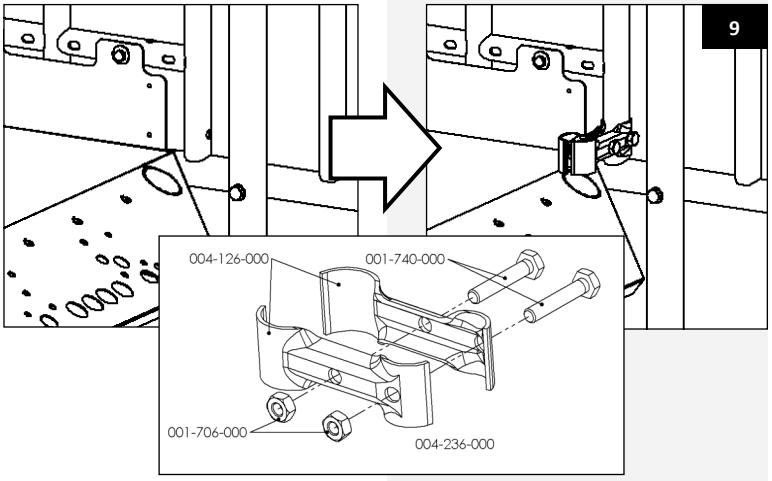

9. Install the PipeFeeder dosing unit using the supplied fixing materials. Slide the upper bracket over the PipeFeeder. Attach the lower bracket to the side fence, but do not tighten it yet. Place the PipeFeeder onto the lower bracket so that the black 'Hanskamp' plate rests on the lower bracket. Then install the upper bracket and tighten all fixings securely. Ensure there is a minimum clearance of 26 cm between the bottom of the feed trough and the underside of the PipeFeeder. Provide adequate ventilation around the PipeFeeder at all times.

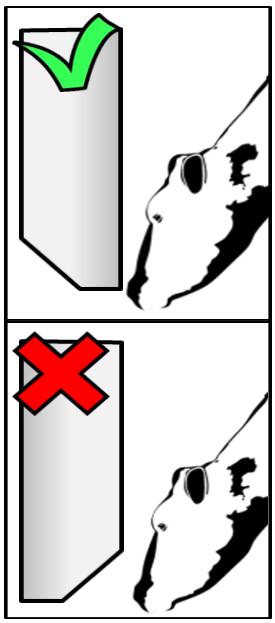

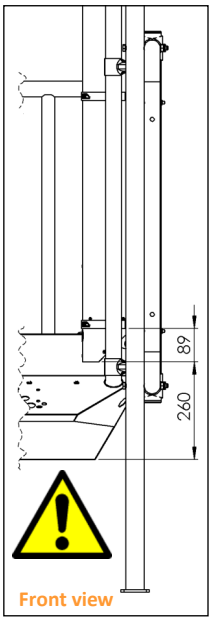

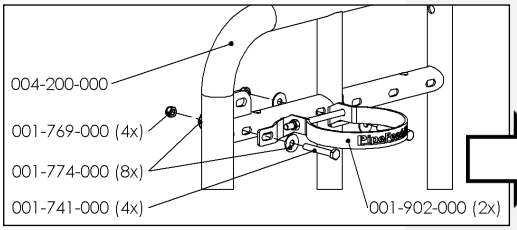

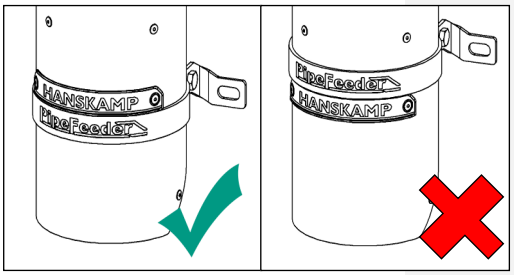

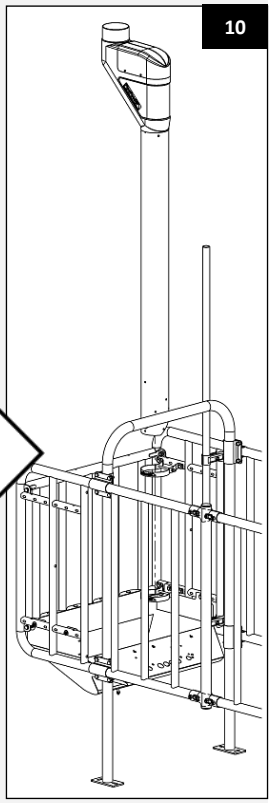

Important!

- Clean the feed trough regularly. Ensure that no feed residues remain between the PipeFeeder and the feed trough.
- Prevent water from entering the PipeFeeder, as this may affect its operation.
- Maintain sufficient clearance between the PipeFeeder and the feed trough (minimum 26 cm) to prevent condensation of the cow's breath.



The FeedStation Walk-In provides space for four feed types (PipeFeeders). Optionally, a powder dispenser (Black-V) and/or a liquid dispenser (MultiDos) can be added.

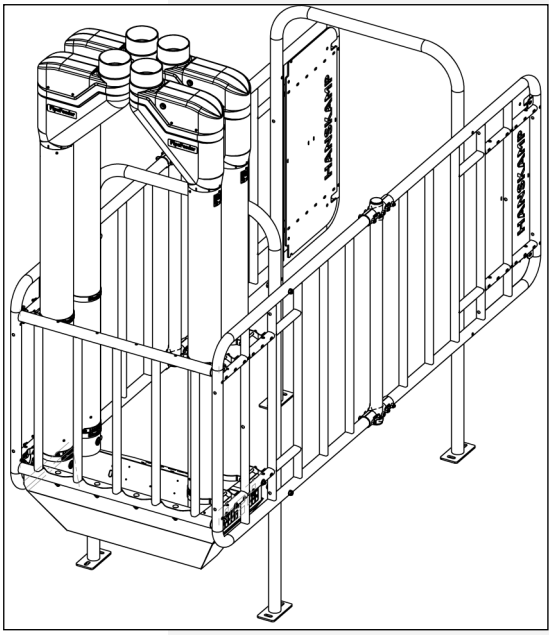

10. Position the complete FeedStation Walk-In in the correct location and secure it to the floor using through anchors or expansion bolts. Use M12 fixing materials (fig. 11). If the feet do not align correctly, the entire frame can be moved forward or backward. Please note that the FeedStation must then be levelled again.

Please note! Fixing materials for securing the FeedStation Walk-In to the floor are not supplied as standard.

11. Install the relevant electronics on the FeedStation and connect the PipeFeeders. The south-east mounting plate of the feed trough is pre-drilled with holes suitable for various brands and types of transmitters, receivers and controllers. Mounting plates for ear transponders are also available.

12. The cables can be secured underneath the feed trough using cable ties. The tube installed in step 8 can be used as a cable duct to guide the cable upwards.

Connecting FeedStations Walk-In

FeedStations Walk-In can easily be positioned next to each other. Only one intermediate fence is required, allowing significant savings in components. Even with the L'port closing gate, FeedStations can be coupled together. Thanks to the modular design, mirrored configurations or three FeedStations positioned side by side are also possible.

Please note! Ensure that the PipeFeeders are correctly adjusted so that no feed is spilled if a cow bumps into them (see manual 001-847-000 PipeFeeder).
Please note! Always use a cable duct or protective conduit to protect cables and pipes against external mechanical damage.
Please note! Always route cables out of reach of the cows.
Please note! Ensure that both the electronics and the FeedStation Walk-In are properly earthed.
Please note! Calibrate the PipeFeeder dosing unit before use. Repeat calibration monthly or whenever the type of feed is changed.
Please note! Risk of falling: Do not climb on the FeedStation Walk-In.

11

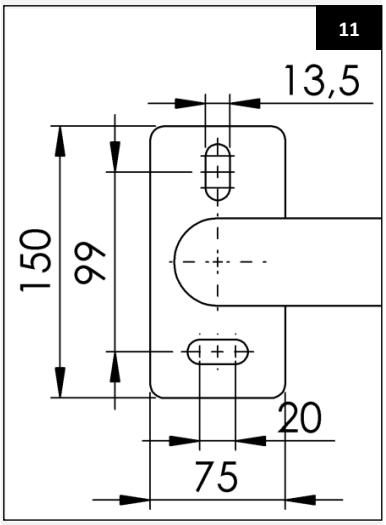

12

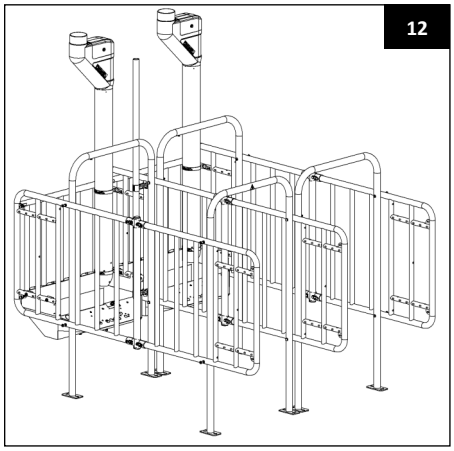

13

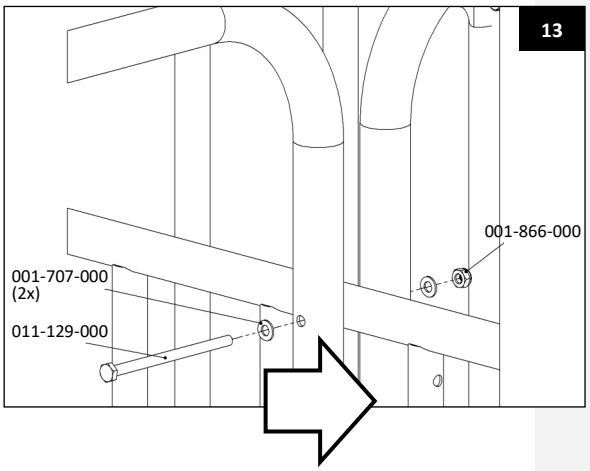

14

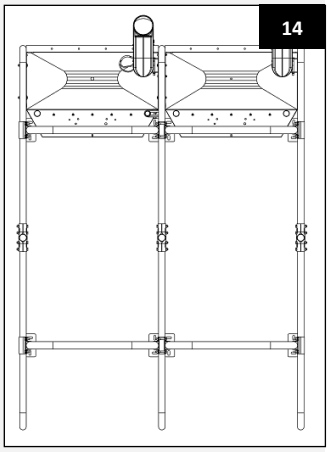

Maintenance

Check the FeedStation Walk-In daily for faults, dirt, and wear. Keep the FeedStation clean to ensure animal health and to extend the lifespan of the station.

Caution! Always switch off the electrical power to the FeedStation Walk-In and depressurise the compressed air supply before performing any maintenance.

Disassembly

During disassembly, all parts must be separated by material type and disposed of in accordance with applicable waste disposal regulations.

Caution! Always switch off the electrical power to the FeedStation Walk-In and depressurise the compressed air supply before disassembly.

Overview of recorded changes in this installation and operating manual

No.	Issue date	Chapter(s)	Notes
1	08/2013		First issue
1.1	09/2013	All	Modified to PipeFeeder in long version
1.2	10/2013	Safety	Declaration of incorporation removed. FeedStation is not a machine
2.0	01/2014	All	Second issue, Feed station redesign
3.0	08/2014	All	Converted to Publisher
3.1	02/2015	All	Parallel clamp adjusted
3.2	10/2015	All	General inspection/improvements
3.3	04/2015	All	Clamp 1910 replaced with fastening material
3.4	06/2016	Parts list	Parts list modification
3.5	01/2017	Install PF (9)	Installation height & direction towards the cow
3.6	05/2023	Page 14 Extra options	Guard plate + installation added
3.7	04/2024	Page 7	Image indicating the type plate removed
3.8	01/2025	Page 14	Image added. PowerDos 002-400-000 removed and 004-256-000 protective tube set added
3.9	12/2025	Pages 1, 17	Page 1: Place name change. Page 17: Address change Hanskamp.
4.0	01/2026	Page 11	Text inserted at item 9 and image

Warranty limitations

Excluded from warranty are costs and expenses resulting from:

- Incorrect use of the equipment, deviating from the specifications in this manual.
- Consequences of any intervention by technicians other than technicians authorised by Hanskamp to perform specific actions.
- Incidents such as freezing, ice, fire, flooding, inundation, extreme water damage or lightning strike.
- Defects in the electrical system or grounding.
- Damage to the electrical system caused by pests and the like.
- Incorrect use of compressed air that does not comply with the compressed air regulations of Hanskamp and suppliers, resulting in defects in the pneumatic systems. These compressed air regulations can be found on www.hanskamp.com.

The warranty does not cover consequential damage that does not relate to the machine itself. All systems have been tested; in the event of malfunctions, Hanskamp cannot be held liable for consequential damage.

Copyright and Disclaimer
The information in this publication is intended for informational purposes only and should not be construed as a sales offer. Products offered may differ from the images shown. References to brands and/or products in this manual are for identification purposes only. The mentioned company and product names in this manual are trademarks of their respective owners. Nothing in this publication may be reproduced or disclosed without prior written permission from Hanskamp AgroTech BV. Although this publication has been compiled with the greatest possible care, Hanskamp AgroTech BV is not liable for any damage that may arise from errors or omissions in this publication. The Dutch installation and operating manual is the original installation and operating manual. Translations into other languages use the Dutch installation and operating manual as the source document. Hanskamp AgroTech BV accepts no liability for discrepancies between the translations. If there are doubts about the content and accuracy of the translated installation and operating manual, the Dutch installation and operating manual shall be the authoritative document.

Appendix 1

Hanskamp can supply the following options for the FeedStation concentrate box:

027-000-000	PipeFeeder concentrate feeder
028-000-000	PipeFeeder low capacity
004-030-000	L'port universal closing gate
036-000-000	MultiDos liquid concentrate feeder
004-221-000	Plastic guard plates (fig. 15)
004-256-000	Protective tube set 1¼ suitable for FS frame (fig. 16)

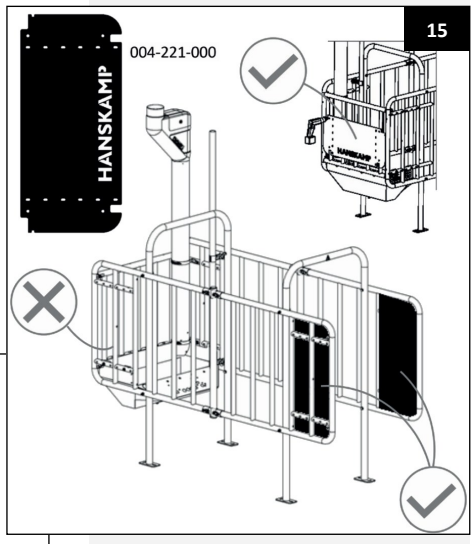

Dimensions:

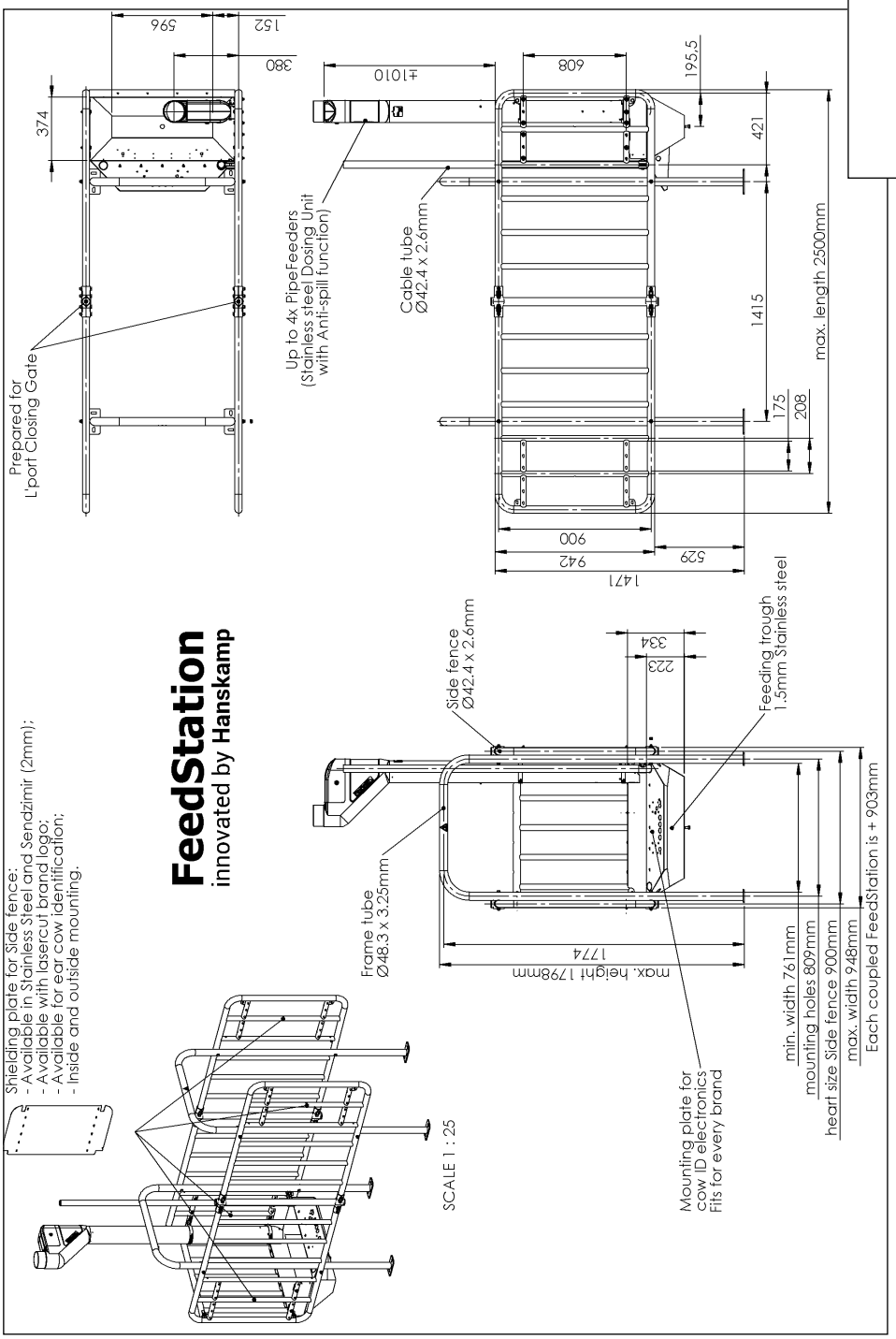

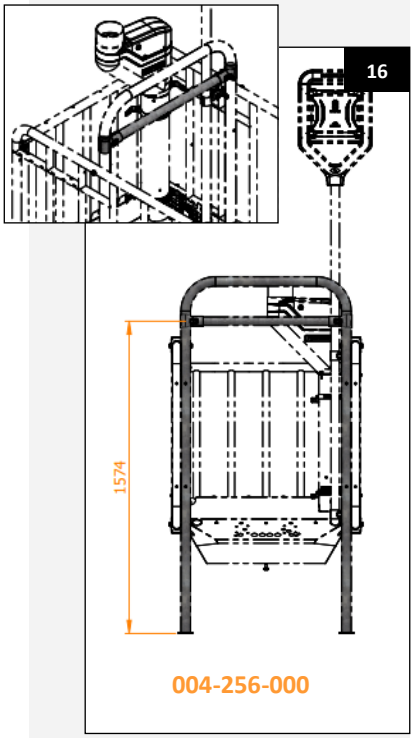

Appendix 2 Spare Parts

For maintenance or any other reason, you can order spare parts from your supplier.
Please use the part numbers as indicated on the drawings.

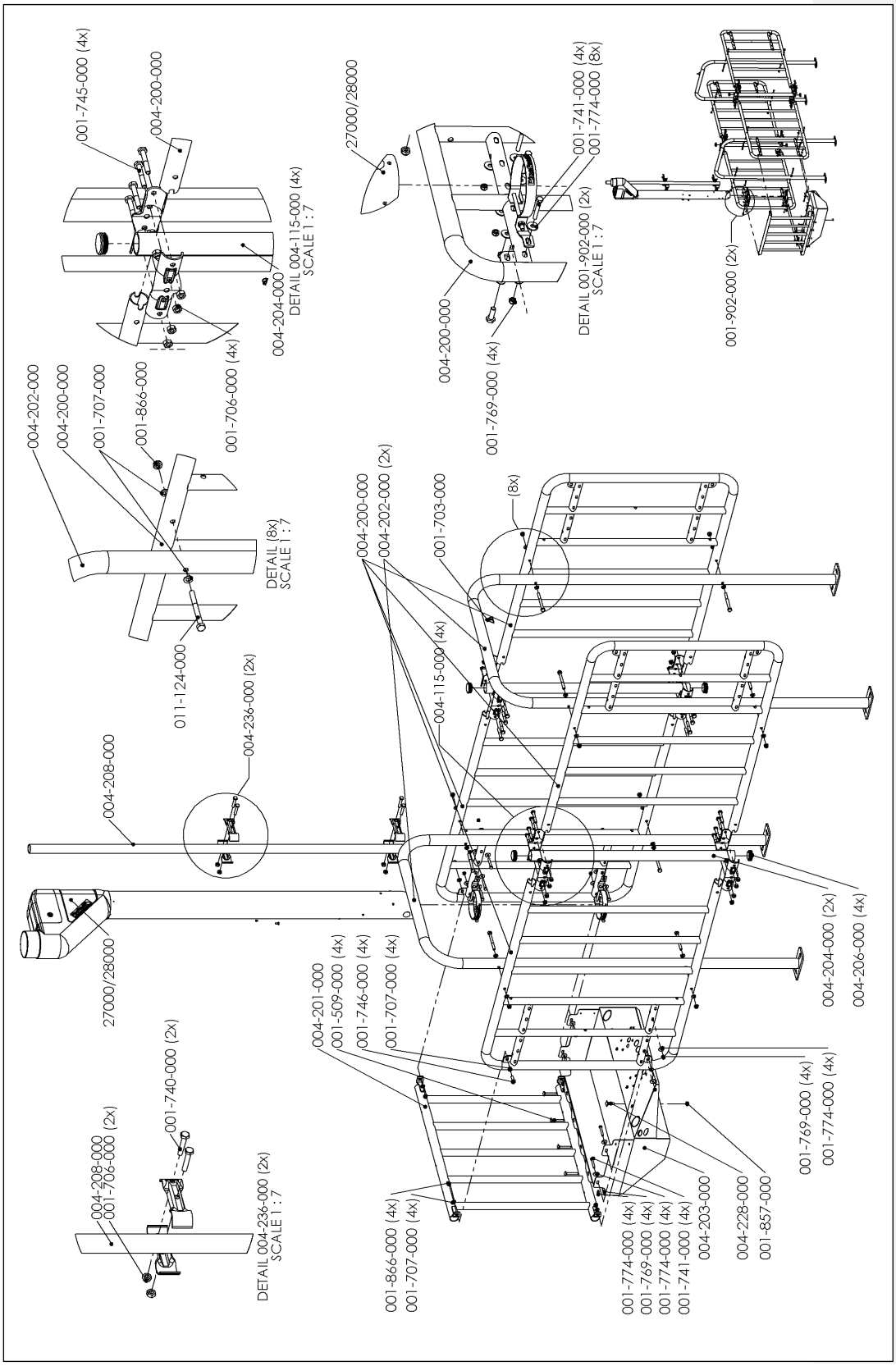

Appendix 3 Description of the parts from Appendix 2

FeedStation Walk-In (042-012-000)

Art. no.	Description	Quantity
004-115-000	Double T-clamp 1½" x 1¼"	4
004-200-000	Side fence FS	4
004-201-000	Connecting fence FS	1
004-202-000	Frame FS	2
004-204-000	Support tube 1½" l=980 mm FS	2
004-208-000	Cable conduit 1¼" l=1900 mm FS	1
004-236-000	Parallel clamp double-shell 1" x 1¼"	2

Assembly of 1.5 mm stainless steel feed trough for FeedStation Walk-In (004-203-000)

Art. no.	Description	Quantity
001-857-000	Self-locking nut M10 A2 DIN 985 coated	1
004-130-000	Cable gland diaphragm sleeve	2
004-228-000	Hex bolt M10x35 A2 DIN 603	1
004-240-000	Stainless steel feed trough 1.5 mm FS-WI	1

The standard number of feed types is one (PipeFeeder concentrate feeder) per FeedStation.

004-205-000 Set of fixing materials for FeedStation

Art. no.	Description	Quantity
001-376-000	Grip seal bag 150 x 200 mm	1
001-509-000	Hex bolt M8x60 A2 DIN 603	4
001-703-000	Warning sticker - impact hazard	1
001-707-000	Washer M10 DIN 125 8.8 electro-galvanised	24
001-741-000	Bolt M8x55 mm A2 DIN 933	8
001-746-000	Bolt M10x30 mm DIN 933 8.8 electro-galvanised	4
001-769-000	Self-locking nut M8 A2 DIN 985 coated	12
001-774-000	Fender washer M8 DIN 9021 A2	24
001-866-000	Self-locking nut M10 DIN 985 8.8 electro-galvanised	12
004-206-000	Round insert 1 7/8"	4
011-124-000	Hexagon bolt M10x105 DIN 931 8.8 electro-galvanised	8

004-207-000 Fixing materials for FeedStation per additional feed type PipeFeeder

Art. no.	Description	Quantity
001-376-000	Grip seal bag 150 x 200 mm	1
001-741-000	Bolt M8x55 mm A2 DIN 933	4
001-774-000	Fender washer M8 DIN 9021 A2	8
001-769-000	Self-locking nut M8 A2 DIN 985 coated	4

Hanskamp AgroTech BV
Xenonstraat 6
7031 HX Wehl
The Netherlands
Tel: +31 (0)314 - 393 797
www.hanskamp.com

Also take a look at:

