# Black-V anti-spill

## 002-670-000

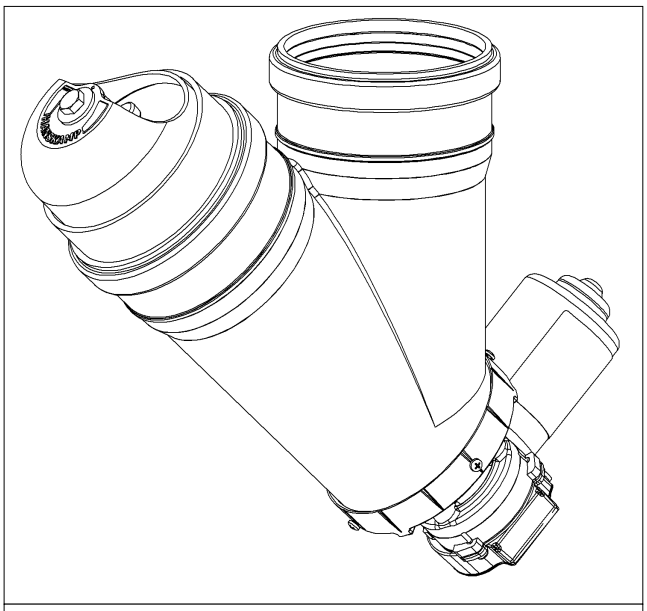

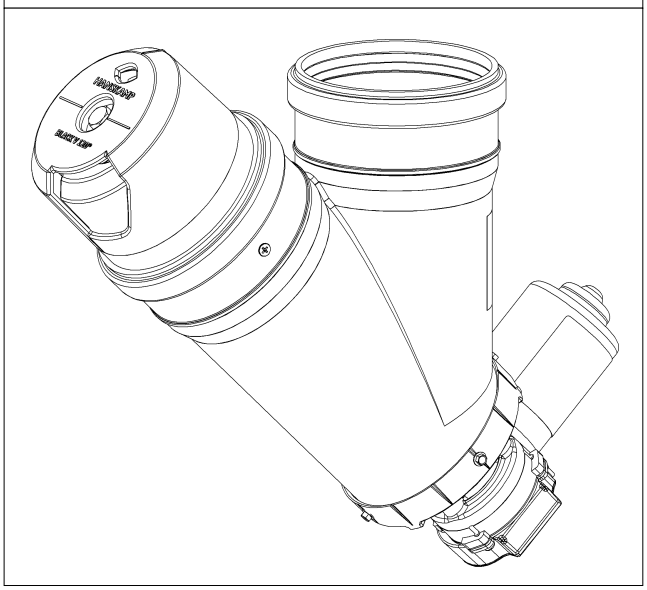

**Anti-mors voerdosator**
**Anti-spill feed dispenser**
**Verschüttfreier Futterdosierer**
**Doseur d'alimentation anti-gaspillage**

**Installation and Operating Instructions** **EN**

Scan for digital version

HANSKAMP
Innovation for dairy farming

Article number: 010-252-000

Date: March 2026
Version 2.0 - Translation of original Installation and Operating Instructions
According to Annex 1 Section 1.7.4. of the Machinery Directive 2006/42/EC

Wehl,
The Netherlands
www.hanskamp.com

# Foreword

## Contents of the installation and operating instructions

This manual contains the information required to install and operate the Black-V correctly. Please read this information carefully and ensure you understand everything before configuring the Black-V. Failure to do so may result in damage to the equipment. Please contact Hanskamp if any information is unclear, or if you require further details.

All information in this manual has been compiled with care. Hanskamp cannot be held liable for any errors or omissions in this manual. The recommendations are intended as guidelines. All instructions, illustrations, and specifications in this manual are based on the most up-to-date information available at the time of publication. Your Black-V may include improvements, features, or options not covered in this manual.

### Applicability

The table below shows the type numbers of the Black-V to which this manual applies. See also fig. 1.

### Model designation

| Model | Type number | Volume | Fits in |
|---|---|---|---|
| Black-V anti-spill | 002-67*-010 | 30 g - 800 g/min | Feed station (*DeLaval FSC 40 & 400)* |
| | 002-67*-011 | 10 g - 240 g/min | Feed station *(DeLaval FSC 40 & 400)* |
| | 002-67*-111 | 5 g - 120 g/min | Feed station *(DeLaval FSC 40 & 400)* |
| | 002-67*-020 | 30 g - 800 g/min | VMS / Parlour |
| | 002-67*-021 | 10 g - 240 g/min | VMS / Parlour |
| | 002-67*-121 | 5 g - 120 g/min | VMS / Parlour |

### Contact number of milking technology dealer

We recommend entering the name, telephone number, and e-mail address of your milking technology dealer in the table below, so you can easily find the correct contact information when needed.

| | |
|---|---|
| Name | |
| Address | |
| Phone number | |
| E-mail | |

1

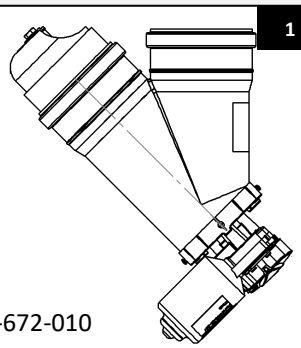

002-672-010

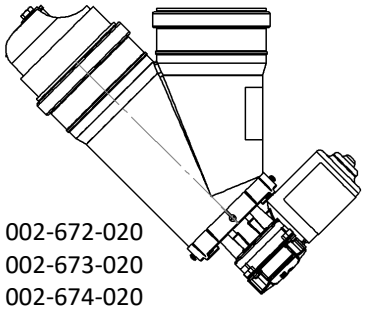

002-672-020
002-673-020
002-674-020

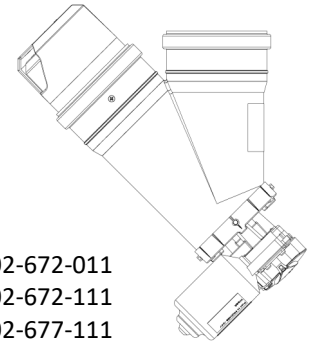

002-672-011
002-672-111
002-677-111

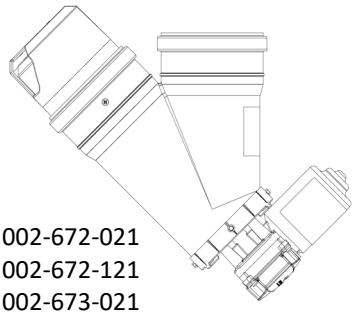

002-672-021
002-672-121
002-673-021
002-673-121
002-674-021
002-674-121

**Lateral view Black-V**

# 1. Introduction

A calm herd significantly contributes to the health and welfare of each individual cow. However, a common problem with concentrate dispensers in out-of-parlour feeders and milking robots is spillage of concentrate after feeding has stopped. This often occurs when cows bump against the feeders, inadvertently being rewarded for their behaviour by spilled pellets. The result is restlessness in the area around the out-of-parlour feeding station.

Hanskamp's spill-free Black-V provides the ideal solution to this problem. This product consists of a dosing system connected to an electric motor and mounted beneath the concentrate dispenser. The motor drives an auger, which delivers the concentrate feed in measured portions via a dosing disc at the end of the auger. Once a portion has been dispensed, the dosing disc automatically moves to a position that prevents further concentrate from spilling, for example due to cows bumping the dispenser.

The dispenser is robust, compact, and fully enclosed. It is compatible with different types of motors; however, the instructions in this manual focus on the RIM motor. This 24 V AC/DC electric motor contains no sliding contacts and is therefore virtually wear-free. A microcontroller converts the AC/DC time pulse into a DC rotary pulse, increasing the motor's power and allowing more precise control. Additionally, the motor is short-circuit proof and features overvoltage protection, preventing damage to both the motor and the control unit in the event of a current overload. Other suitable motors are optionally available.

The information in this manual is intended for both farmers and technicians:

- Dairy farmers use the information to test and adjust the Black-V.
- Technicians use the information to install and set up the Black-V.

# 2. Safety

## 2.1 Introduction

The 'Safety Warning' symbol warns about important safety messages on your Black-V and in the manual. Use caution if you see this symbol; it means there is a risk of personal injury or death. Follow the directions of any safety messages.



*Safety Warning Symbol*

## 2.2 Warning texts

Note the use of the warnings **CAUTION** and **DANGER** in the safety messages. The following guidelines apply to these warnings:



**Caution! Indicates a potentially hazardous situation which could result in minor personal injury or damage to equipment or the environment if the warning is ignored.**



**Danger! Indicates a potentially hazardous situation which could result in death or serious injury if ignored.**

## 2.3 Safety instructions

You are personally responsible for operating and maintaining your Black-V safely. Ensure that you, and anyone who operates the equipment, carries out maintenance, or works in the vicinity of the Black-V, are fully familiar with all safety information in this manual.

Safety is your responsibility. Proper safety measures protect you and those around you. Incorporate these measures into your safety programme and make certain that everyone who uses, maintains, or works near the Black-V is aware of them. Never risk injury or death by ignoring the safety precautions.

- Black-V owners must provide training to all users before the equipment is put into operation. This training must be repeated at least once a year.
- Users must read, understand, and follow all safety and operating instructions in the manual.
- Anyone who has not read and understood all safety and operating instructions must not operate the Black-V.
- Do not make any modifications to the equipment. Unauthorised modifications may impair operation, reduce the service life of the Black-V, and/or result in personal injury.
- Only use original spare parts, and ensure they are fitted by authorised technicians.

### 2.3.1 General safety

- Ensure you have read and understood this manual, including all safety instructions, before connecting the power supply to operate or adjust the Black-V, or before switching it off for maintenance.
- Only trained personnel may operate the Black-V.
- Install all guards and safety devices before using the Black-V.
- Wear appropriate protective clothing and personal protective equipment (PPE).
- Before cleaning the Black-V or performing maintenance, switch off the power supply by removing the plug from the socket.
- Make sure that phone numbers of emergency medical care available in your area are at hand.
- If you have any other questions, please contact your milking technology dealer.
- Review all safety-related topics with all users at least once a year.

### 2.3.2 Electrical safety

- Only a qualified electrician may install the Black-V power supply.
- Ensure that the earthing of the electrical system and all parts of the Black-V complies with local regulations.
- Immediately replace any damaged electrical cables, cable sheaths, switches, or other components.
- Isolate or switch off the power supply before opening the Black-V and working on the electrical system.

### 2.3.3 Installation safety

- Make sure that you have read and understood the instructions in this manual.
- Verify that the Black-V has been installed correctly, as described in this manual.

### 2.3.4 Safe operation

- Ensure you have read and understood this manual, including all safety instructions, before connecting the power supply to operate or adjust the Black-V, or before switching it off for maintenance.
- Only trained personnel may operate the Black-V.
- Before cleaning the Black-V or performing maintenance, switch off the power supply by removing the plug from the socket.
- Install the lid and other safety devices before using the Black-V.
- Keep hands, feet, hair and clothing away from live parts.
- Keep all unauthorised persons, particularly small children, away from the Black-V at all times.
- Before connecting the Black-V to the power supply, ensure all parts are properly tightened and that all cables and mountings are in good condition.
- If you have any other questions, please contact your milking technology dealer.

### 2.3.5 Safety during maintenance

- Ensure you have read and understood this manual, including all safety instructions, before connecting the power supply to operate or adjust the Black-V, or before switching it off for maintenance.
- Only trained personnel may service and maintain the Black-V.
- Before cleaning the Black-V or performing maintenance on it, switch off the power supply of the Black-V by removing the plug from the socket.
- Wear protective clothing and safety glasses when working on the electrical system.
- Ensure that all guards and safety devices are correctly installed after completing maintenance work.

### 2.3.6 Safety messages

- This chapter lists general safety messages. Specific safety messages, highlighting potential hazards if procedures or instructions are not followed, are included in the relevant sections of this manual.

# 3. Installation and Operating Instructions

**General description**

The Black-V (fig. 2) is an electric feed dosing unit designed for dispensing concentrate feed. It is intended for use in out-of-parlour feeding stations and robotic milking systems. Before connecting the Black-V to an existing control unit, consult the operation manual of that control unit. In an out-of-parlour feeding station, the electric dosing unit can be connected to the next available feed type slot of the feeding computer. Follow the operation manual of the respective feeding computer for proper connection. The order numbers and designations of the individual components of the Black-V can be found in the annex to this manual.

2

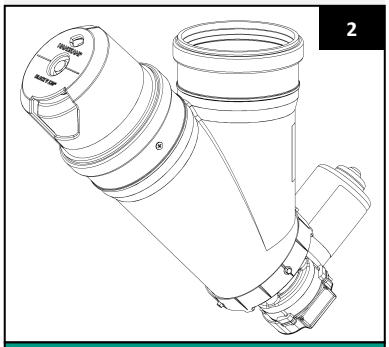

Black-V

**Transport and storage**

The Black-V is supplied in a sealed cardboard box. The carton is protected inside with foil to prevent damage. The Black-V should be stored in the same manner. Multiple Black-V units may be transported on the same pallet.

**Delivery specifications**

**Box contents:**

1. 002-67*-0** Black-V anti-spill 24 V AC/DC

**Options (see annex 7):**

1. 001-793-000 Bracket for pipe, Ø 90 mm
2. 001-845-000 Mounting bracket, 3 mm
3. 001-846-000 Pipe mounting clamp M8, Ø 45 mm
4. 001-849-000 Outlet Black-V
5. 002-055-000 Storage container, 28 L

**Caution! Always move the box carefully!**
**Caution! Parts may fall out when unpacking the box. Always hold the box with the opening facing upwards!**
**Caution! Check the box for damage and for loose or protruding parts that could cause injury!**

**Safety sticker(s)**

The user and installer are responsible for the safe operation and maintenance of the Black-V. Safety stickers are provided to ensure safety in and around the Black-V and must be correctly positioned. A single sticker displaying multiple warnings (fig. 3) is supplied. This sticker must be affixed to the Y-piece connected to the concentrate storage container (fig. 4). Ensure that the sticker is clearly visible at all times.

3

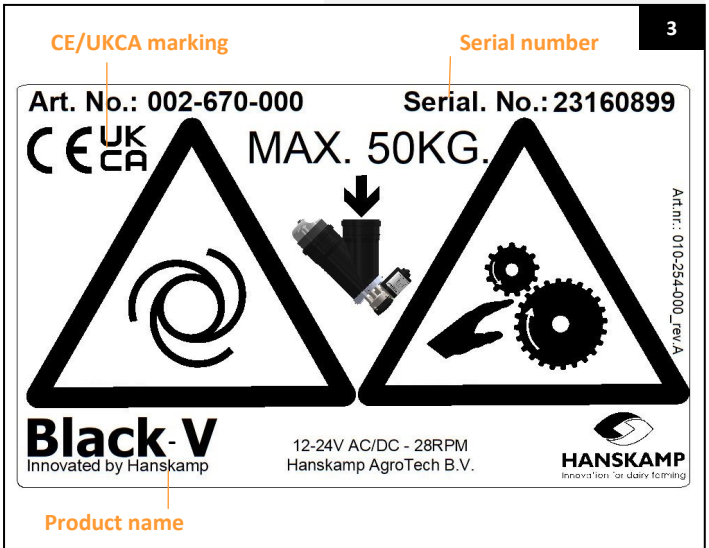


Safety sticker, displayed information can differ

**Application of sticker(s)**

- Clean and dry the surface to which the sticker will be applied.
- Ensure that the surface temperature is above 5 °C.
- Determine the correct position for the sticker.
- Remove a small portion of the backing foil from the rear of the sticker.
- Place the sticker on the surface and press a small part of the adhesive layer onto the surface.
- Carefully remove the remaining backing foil and apply the entire sticker to the surface.
- If necessary, use a needle to poke small air holes in the sticker, and smooth it out using the backing foil.

**Sticker Maintenance**

- Keep the safety stickers clean and legible. Clean them with water and mild soap only. Do not use solvents or abrasives, as these can damage the stickers.
- Replace any missing or illegible safety stickers immediately.

Safety stickers are available from Hanskamp. Refer to the corresponding article numbers when ordering.

4

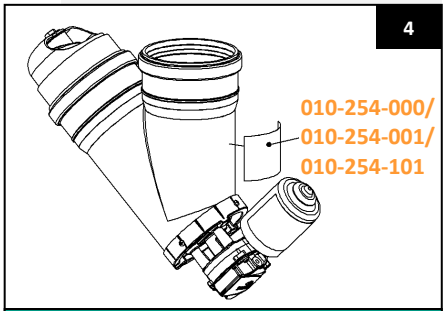


Position safety sticker

**Installation**

Before installation, verify that all parts are present using the parts list in the annex to this manual (see Annex 5 and 6, if applicable).

1. Decide where the Black-V should be installed and at what height. It is recommended to mount the Black-V in or directly next to the feeding station. Refer to Annex 2 for the dimensions of the Black-V. Mounting examples can be found at www.hanskamp.com.

2. Connect the Black-V to a storage pipe or container with an outer diameter of 110 mm (see fig. 5), or to a Hanskamp storage container (art. no. 002-055-000).

3. Ensure that the power of the control unit is switched off. Refer to the corresponding manual for instructions.

4. Use the appropriate cable to connect the Black-V to the control unit. First, connect this cable to the motor. See Annex 3 for the corresponding wiring diagram. Next, connect the other end of the cable to the output of the control unit. This can be the next available feed type slot on the feeding computer. By default, the motor rotates counterclockwise. Annex 4 shows the wiring diagram for DeLaval Feed 2, Alpro, and Delpro feed stations. For other control units, refer to the corresponding manual.

**Caution! Ensure that all wiring is properly concealed and secured out of reach of the animals to prevent potentially dangerous situations.**

**Danger! The Black-V is now electrically live.**

5. The Black-V is fully electrically actuated. The motor drives an auger that transports the feed. When connecting the dispenser, observe the maximum allowable amperage as indicated on the power source. Also, note the maximum allowable supply pressure on the dispenser (50 kg).

**Caution! The pressure exerted by the concentrate on the auger must not exceed 50 kg.**

6. The dosing disc must be correctly positioned at the end of the auger. After dispensing a portion of concentrate feed, the hole in the dosing disc should be on the top side to prevent the feed from falling out. To ensure this, follow these steps:

   - Hold a test transponder in front of the receiver of the feeding computer. The dosing disc will rotate briefly.
   - Once the dosing disc has stopped, switch off the power to the feeding computer to prevent the disc from turning unexpectedly.
   - Loosen the bolt in the centre of the dosing disc and rotate the disc so that the hole faces upwards (see fig. 6).
   - Re-tighten the bolt to secure the disc firmly in place.
   - Switch the power to the feeding computer back on.

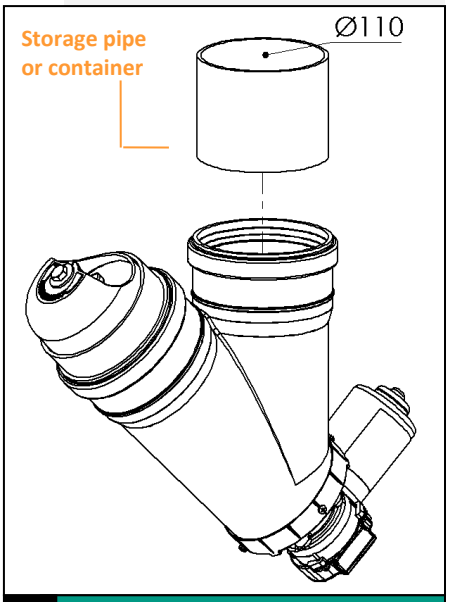


5 Storage pipe for Black-V

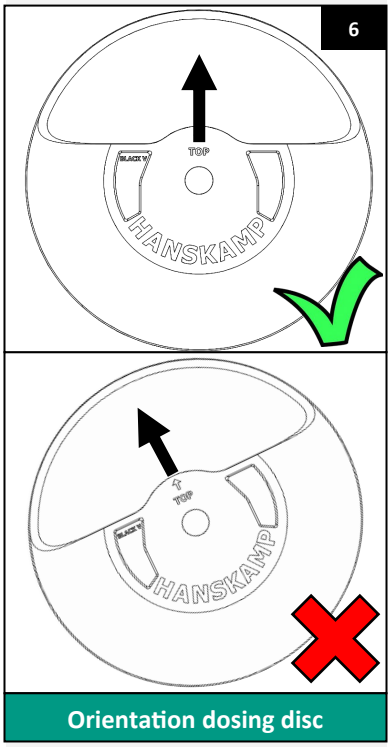


Orientation dosing disc

7. If you have a 120° variant of the Black-V, a different dosing disc must be correctly positioned at the end of the auger. After dispensing a portion of concentrate feed, the opening in the tube must be closed again.

**Adjusting the Black-V**

- Loosen the bolt that holds the dosing disc in place. The disc can now be rotated.
- Rotate the disc until the Hanskamp logo is correctly visible in the cut-out of the tube (see fig. 7).
- Re-tighten the bolt to secure the disc firmly in position.

**Caution! Always switch off the power before making any adjustments.**

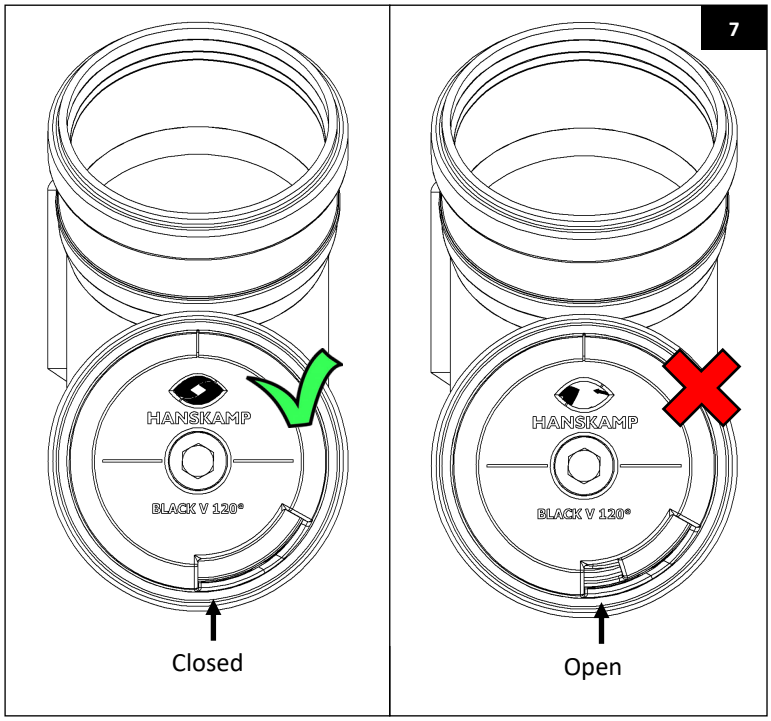

**Calibration**

Calibrate the Black-V by following the steps below, depending on your feeding system:

1. Access the calibration menu of your specific feeding system. Refer to the system's manual or your dealer for guidance. For access to the calibration menu of DeLaval VMS and Alpro feed stations, see the table alongside.

To weigh and measure the correct portion weight, proceed as follows:

2. Place a bucket under the dispenser to weigh the feed.
3. Hold the test-tag of the corresponding feed type in front of the tag reader to dispense feed for 1 minute.
4. Weigh the collected feed and record this value.
5. Repeat steps 3 and 4 twice to conduct a total of three measurements.
6. Calculate the average measured weight by dividing the total weight by 3.
7. Enter this value for the corresponding feed type in the feed computer or the milking robot software.

Repeat the calibration procedure monthly, and also after filling a new silo or changing feed types.

**Accessing DeLaval calibration menu**

DeLaval VMS:
- VMS menu ↓
- Station ↓
- Maintenance ↓
- Calibrate feed station

DeLaval Alpro feed station:
- Main menu ↓
- Settings(4) ↓
- Feed station(1) ↓
- Calibration data(3)

**Setting DeLaval VMS menu**

Computer (Delpro software):
- Unit ↓
- Select: VMS ↓



Feeding; Stop feeding, as soon as this number of teats is still being milked → set to 3.

**Optional setting**

To prevent concentrate feed from remaining in the feed trough of the VMS, the system should be set to stop the feed once one udder quarter has been fully milked. This ensures that the cow consumes her final portion completely. For instructions on setting this option in the DeLaval VMS program (Delpro), see the table alongside. For other robotic milking systems, refer to the relevant system manual or consult your milking technology dealer.



**Caution! The motor of the Black-V starts as soon as it is actuated by the control unit. The starting of the motor can not be recognized beforehand.**

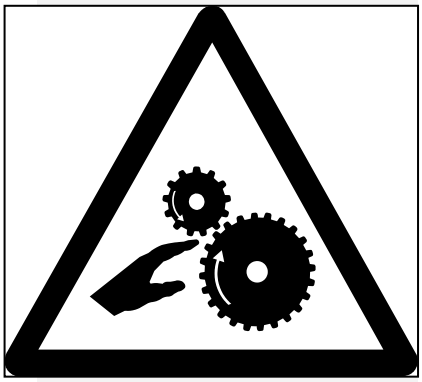

**Maintenance**

1. In case of maintenance, prevent the control unit to which the Black-V is connected from starting unexpectedly. Make sure that the unit is completely de-energised! To do this, disconnect the power supply of the control unit.

2. Repairs and maintenance should be carried out by a qualified specialist wherever possible.

3. Never open the housing while the Black-V is operational. Doing so may create hazardous situations, such as electric shock or entrapment between the auger and other moving parts.

4. The user or owner of the Black-V must strictly follow the guidance and instructions in this manual to ensure the safety of all personnel. Failure to follow these instructions places full responsibility with the user. In such cases, the manufacturer cannot be held liable for any injury or damage to, or caused by, the product.



**Caution! When making modifications to the Black-V or performing maintenance, ensure the unit is completely isolated from the power supply to prevent accidents.**

**Disassembly**

When disassembling the Black-V, all components must be separated by material type and disposed of according to the appropriate recycling or waste management procedures.

**Caution! Always ensure that the Black-V is completely isolated from the power supply before beginning disassembly.**

**List of amendments included in this installation and operation manual**

| Nr. | Release date | Chapter(s) | Comments |
|---|---|---|---|
| 1.1 | 06/2016 | | First release |
| 1.2 | 07/2016 | | Addition of dimensions Black-V models |
| 1.3 | 09/2017 | | Addition of FAQ |
| 1.4 | 12/2017 | | Addition of 500 g/min version (120°) |
| 1.5 | 12/2018 | | Addition of 15 g powder version |
| 1.6 | 03/2022 | | 15 g & 50 g converted to 10 g & 30 g |
| 1.7 | 01/2023 | Pages 7, 13 | UKCA logo added |
| 1.8 | 12/2023 | Page 21<br>Pages 19, 20, 22 | Addition stainless steel rear 001-038-000<br>Images modified and inserted |
| 1.9 | 12/2025 | Pages 1, 24 | Page 1 Change of place name. Page 24 Address change Hanskamp. |
| 2.0 | 03/2026 | Pages 1, 22, 23 | Page 1 QR code inserted. Page 22 Image replaced with image showing a mounting plate. Page 23 Mounting plate article number added to the table. |

**Warranty limitations**

Costs and expenses resulting from the following are excluded from the warranty:

- Using the equipment improperly, in violation of the specifications in the installation and operating instructions;
- The consequences of any intervention by mechanics other than mechanics approved by Hanskamp for carrying out certain work;
- Incidents such as freezing, ice, fire, flood, flooding or any other problems caused by excessive water, and lightning;
- Defective electrical system or earthing;
- Using compressed air that does not meet Hanskamp's quality standards;
- Damage to the electrical system caused by pests and the like.

The warranty does not apply to consequential damages unrelated to the machine itself. All systems have been tested, However, in the event of defects, Hanskamp AgroTech BV cannot be held responsible for consequential damage.

**Copyright and disclaimer**

The information in this publication is for informational purposes only, and is not intended as a sales quote. The products offered may differ from the images. Any brand or product references in this manual are for identification purposes only. The company and product names mentioned in this manual are trademarks. No part of this publication may be reproduced or made public without the prior written consent of Hanskamp AgroTech BV. Although this publication has been compiled with the greatest care, Hanskamp AgroTech BV is not liable for any damage that may arise due to any errors or omissions it might contain. The Dutch installation and operating instructions are the original installation and operating instructions. Translations into other languages are based on the Dutch installation and operating instructions as a source document. Hanskamp AgroTech BV accepts no liability for differences between the translations. If there are any doubts about the content and accuracy of the translated installation and operating instructions, the Dutch installation and operating instructions shall prevail.

## 4. FAQ

| Problem | Possible cause | Solution |
|---|---|---|
| No feed dispensing. | Blockage by wood or plastic, for example. | Disconnect the power supply to the motor and wait until the LEDs have gone out. Remove the auger from the Black-V and empty the Y-piece. Replace the auger. Then switch the power back on. |
| | No feed in the storage pipe. | Check the auger and the silo. |
| | Motor is not actuated. | Open the cover of the motor and check the LEDs on the motor PCB. Check the power supply and control unit. |
| Black-V is spilling. | Dosing disc has been adjusted incorrectly. | For readjustment of the dosing disc, see p. 8, step 6 or p. 9, step 7. |
| Black-V does not dispense the right amount. | Calibration is incorrect. | Calibrate the controller (see p. 10). |

### Error codes DeLaval

| Error code | Possible cause | Solution |
|---|---|---|
| Motor keeps rotating in feeding station no.: ...<br><br>The feedback LED of the RIM motor PCB flashes every 10 sec. | RIM motor rotates without being actuated. This may be caused by a short circuit. | Disconnect the power supply to the motor and wait until the LEDs have gone out. Check the wiring. Then switch the power back on. See service info 010-225-011 for the operation of the RIM motor. |
| | Feed pulse lasts longer than 10 min. | Disconnect the power supply to the motor and wait until the LEDs have gone out. Check the wiring and control on the part of the DeLaval unit.<br>Then switch the power back on. |
| Motor is not rotating in feeding station no.: ...<br><br>The feedback LED of the RIM motor PCB does not flash during a 1-minute pulse. | Blockage by wood or plastic, for example. | Disconnect the power supply to the motor and wait until the LEDs have gone out. Remove the auger from the Black-V and empty the Y-piece. Replace the auger. Then switch the power back on. |

## Declaration of incorporation of complete machines IIA

**According to Annex IIA of the Machinery Directive 2006/42/EC, for completed machines**

We,
Hanskamp AgroTech BV
Broekstraat 17
7009 ZB Doetinchem
The Netherlands,

Authorised compiler(s) of the technical file:

H.J. Hanskamp,

declare under our sole responsibility that the following product:

Black-V anti-spill series, type number(s) 002-670-000,
Concentrate feed dispensing unit for out-of-parlour VMS milking systems or milking parlours,

to which this declaration relates, complies with the provisions of the following directives:

- Machinery Directive 2006/42/EC
- EMC Directive 2014/30/EU

The product also complies with the provisions of the following standards:

- NEN-EN-ISO 12100

**If the Black-V is not connected and the prescribed safety instructions are not used, this Declaration of Conformity is not applicable and no rights can be derived from this declaration.**

Doetinchem, the Netherlands, 22-03-2022
H.J. Hanskamp



## Appendix 1 Composition of Black-V article number

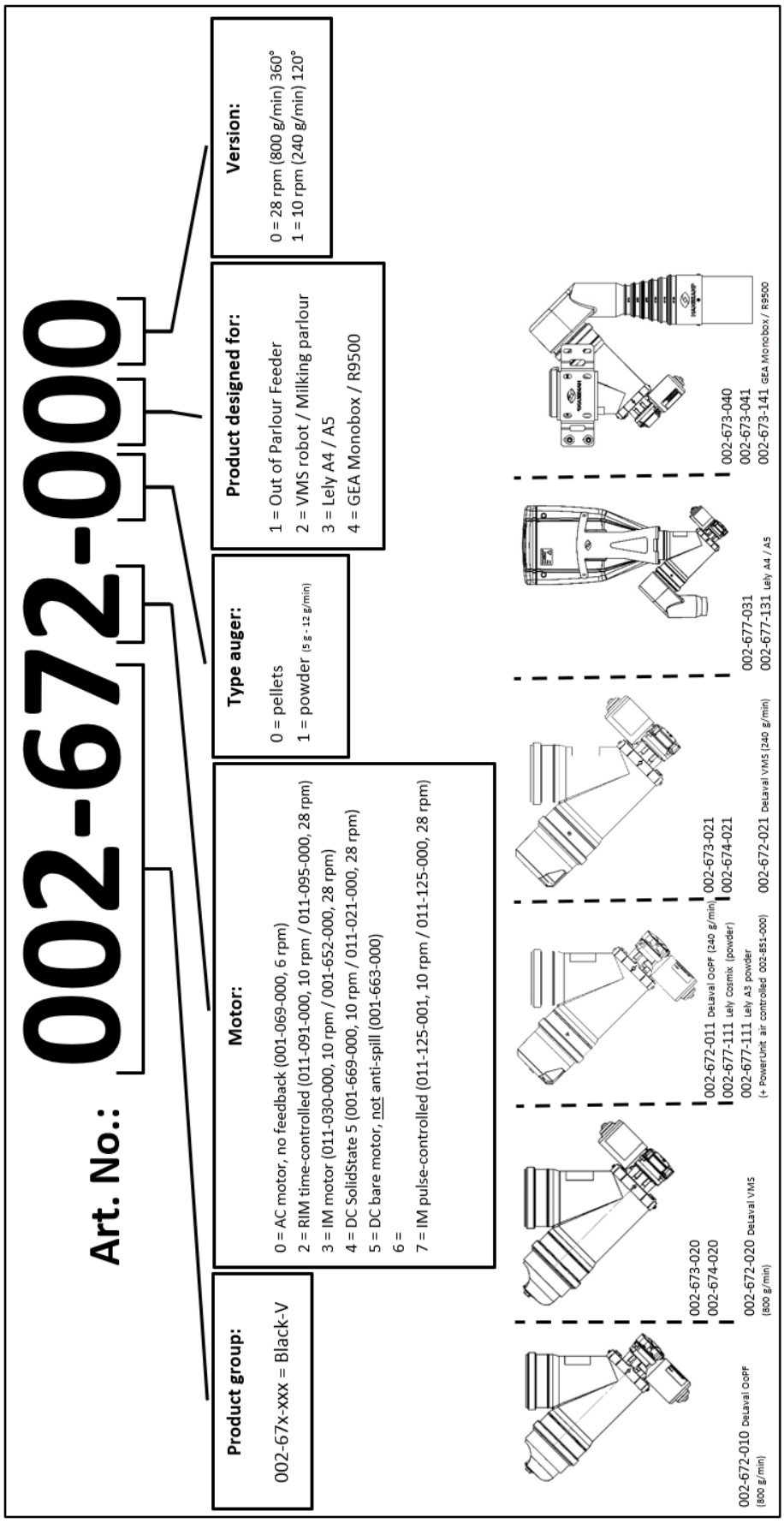


*Version May 2022*

## Appendix 2A Dimensions Black-V 30 g (in mm)

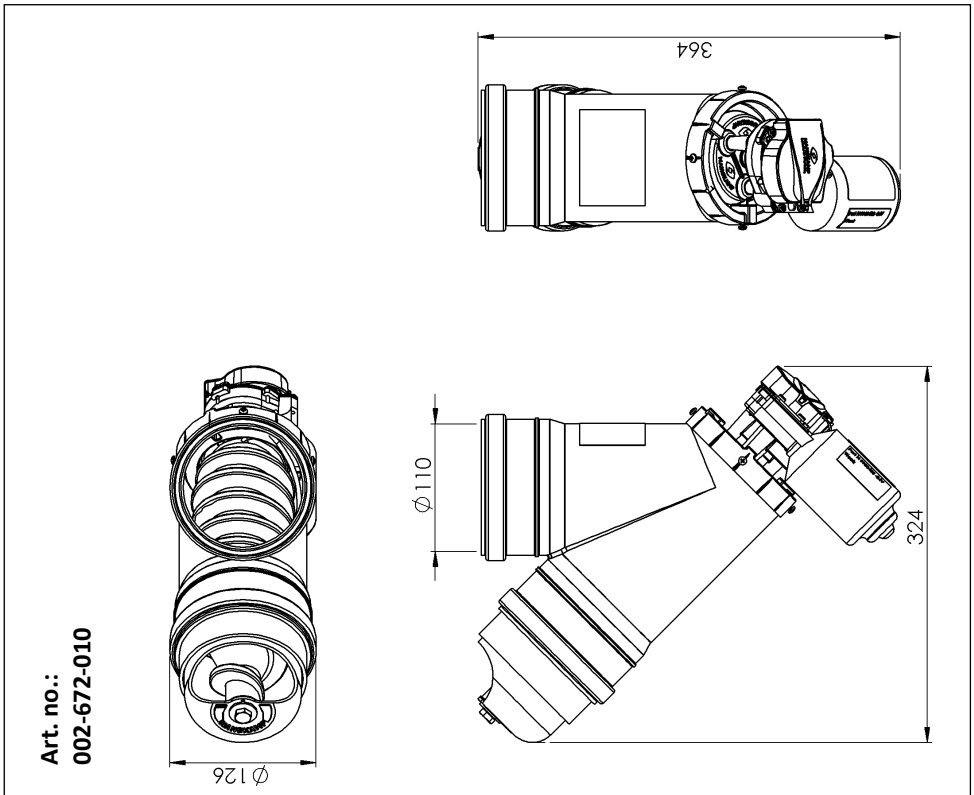


**Art. no.:**
**002-672-010**

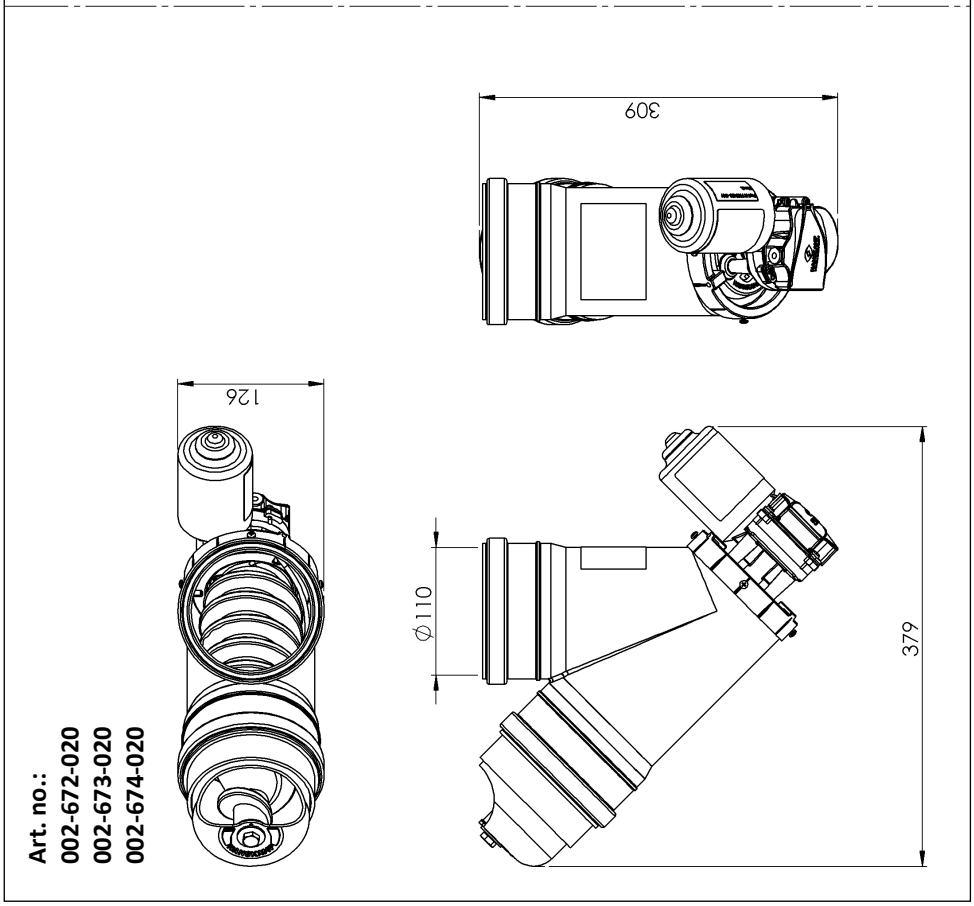


**Art. no.:**
**002-672-020**
**002-673-020**
**002-674-020**

## Appendix 2B Dimensions Black-V 5 g & 10 g (in mm)

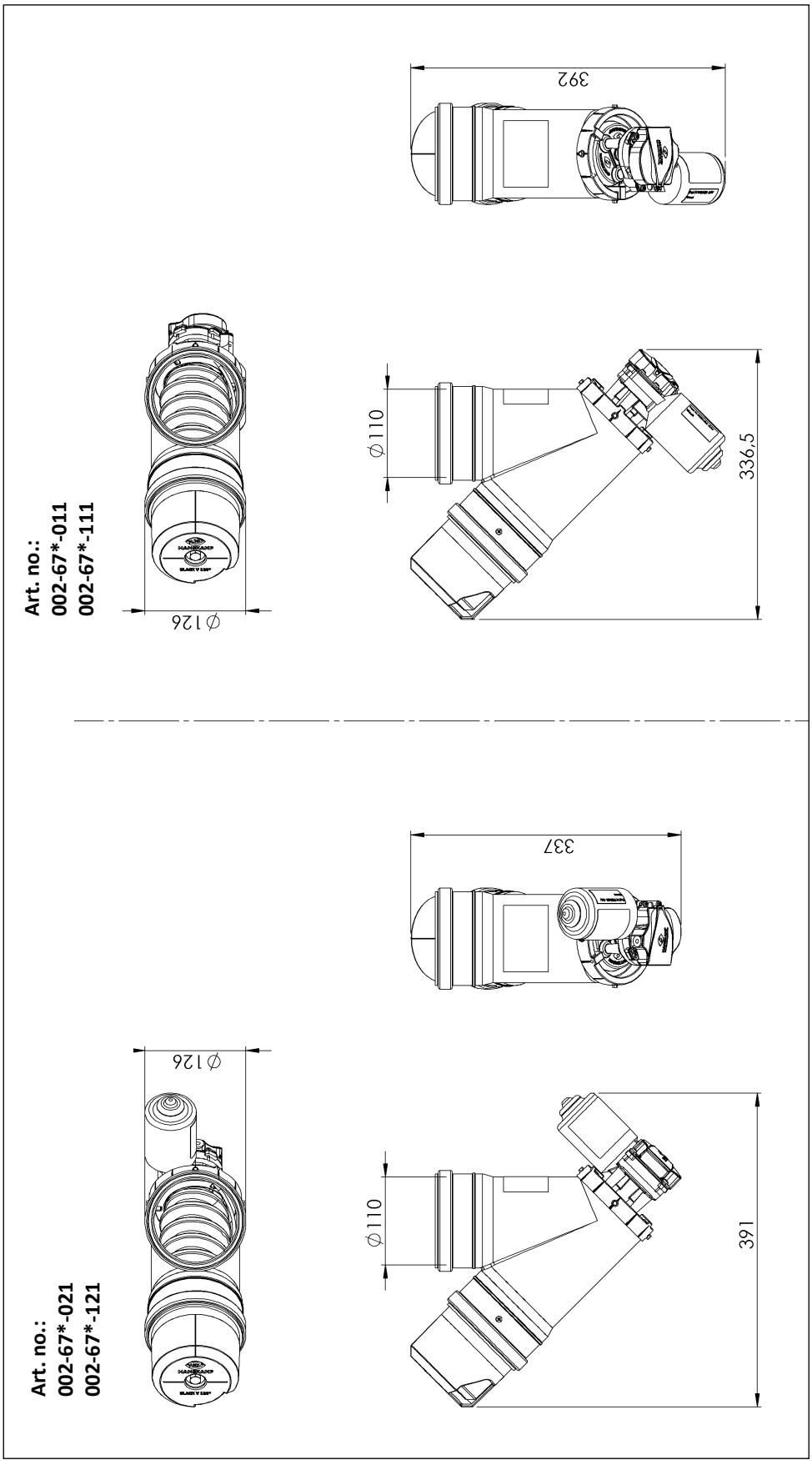

## Appendix 3 Schematic representation of the circuits, connections and technical data of the RIM motor

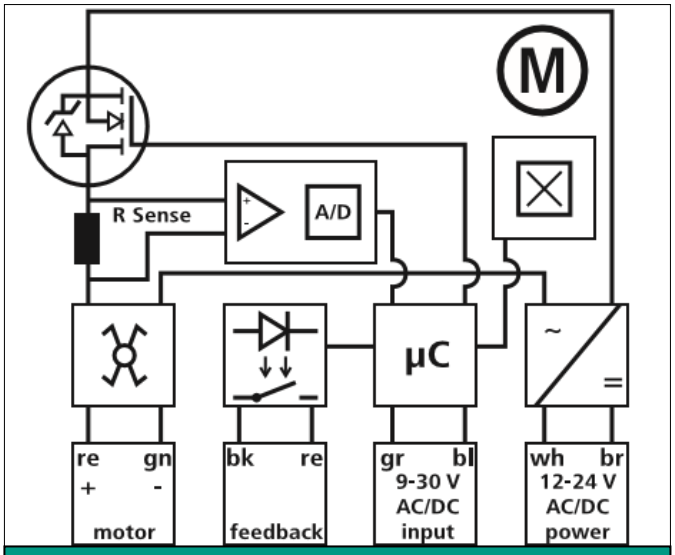


Schematic diagram of RIM motor circuits

| Overview connections of RIM motors 011-095-000 & 011-091-000 | | | | | | | |
|---|---|---|---|---|---|---|---|
| MOTOR | | FEEDBACK | | INPUT | | POWER | |
| red | green | black | red | grey | blue | white | brown |

| Technical data | |
|---|---|
| Supply voltage | 12-24 V AC/DC |
| Idle current | 350 mA |
| Nominal current | 360 mA |
| Maximum current | 440 mA |
| Capacitor | 22 µF |
| Electric motor | 10/28 rpm |
| Capacity | 240 - 800 g/min |
| Storage capacity | Max. 50 kg |
| Rotating direction auger | Counter-clockwise |

## Appendix 4 Wiring scheme for DeLaval Feed2 / Alpro / Delpro StationController

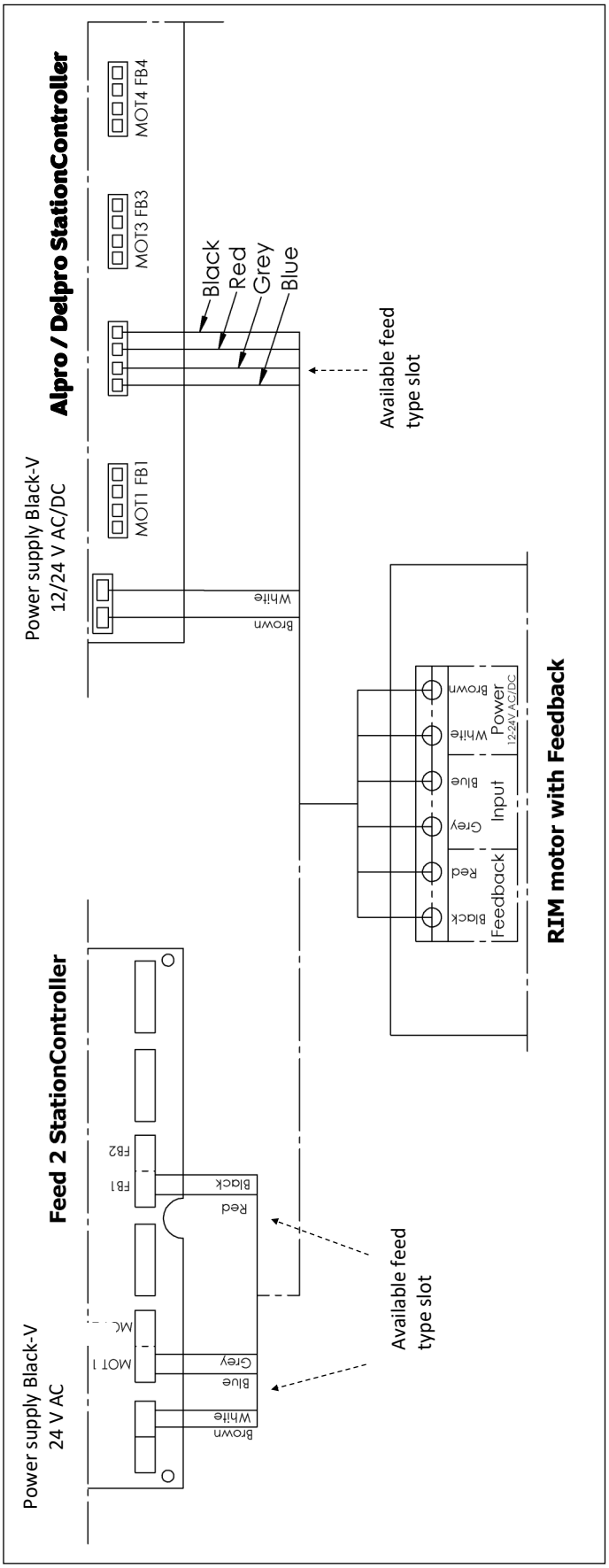

## Appendix 5A Individual parts Black-V 800 g/min

For maintenance or other purposes, individual parts can be reordered through your milking equipment dealer. When doing so, please refer to the article numbers as indicated in the drawing below.

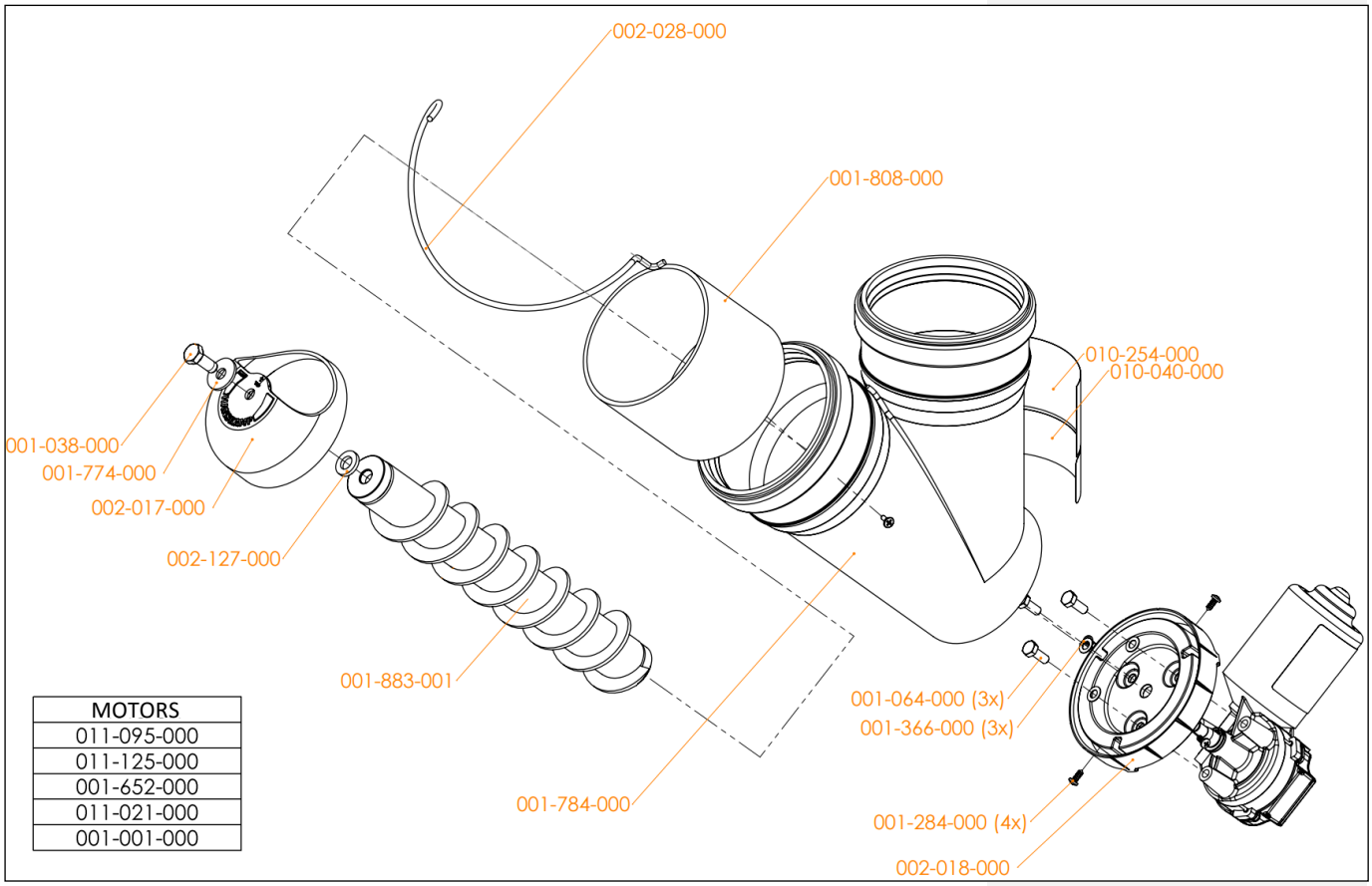


| MOTORS |
|---|
| 011-095-000 |
| 011-125-000 |
| 001-652-000 |
| 011-021-000 |
| 001-001-000 |

## Appendix 5B Individual parts Black-V 5 g & 10 g

For maintenance or other purposes, individual parts can be reordered through your milking equipment dealer. When doing so, please refer to the article numbers as indicated in the drawing below.

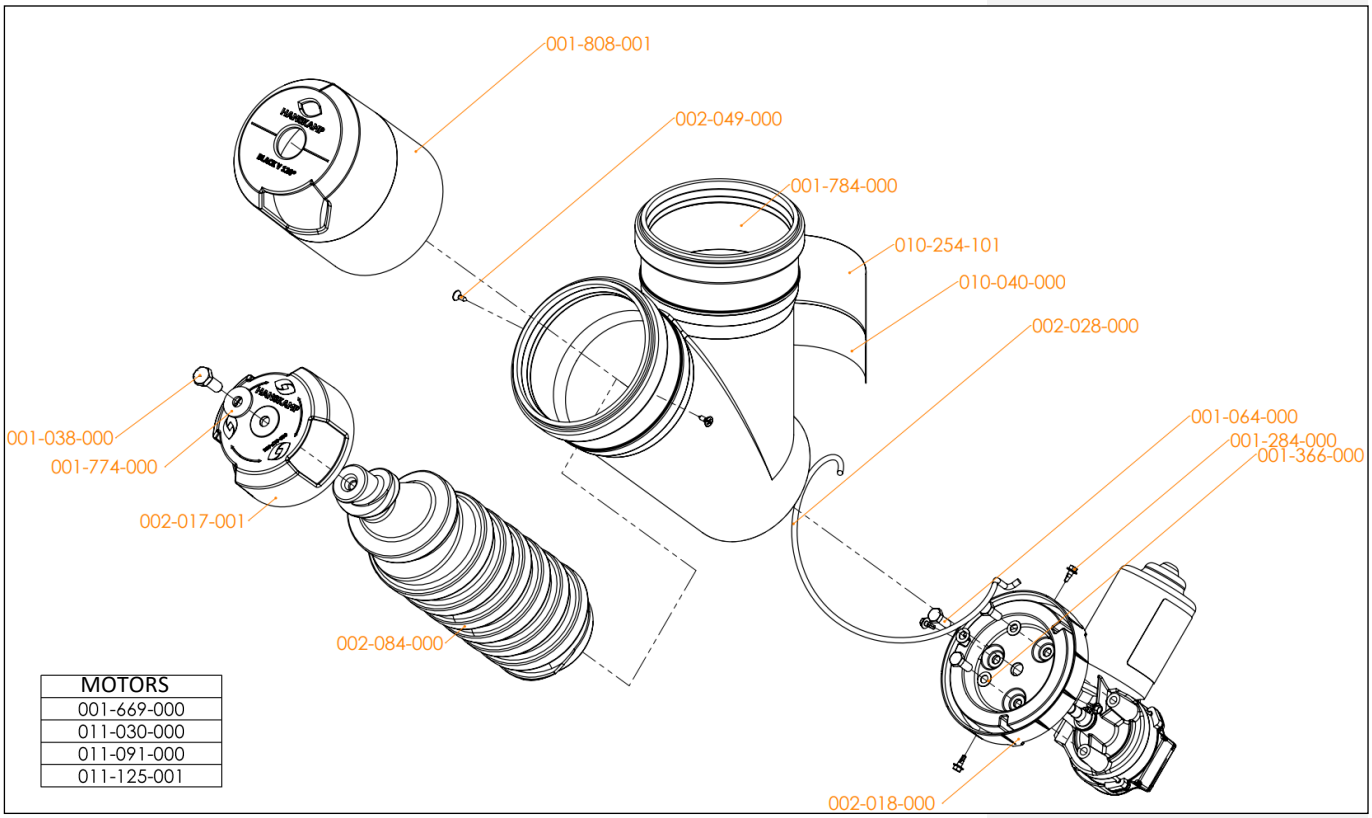


| MOTORS |
|---|
| 001-669-000 |
| 011-030-000 |
| 011-091-000 |
| 011-125-001 |

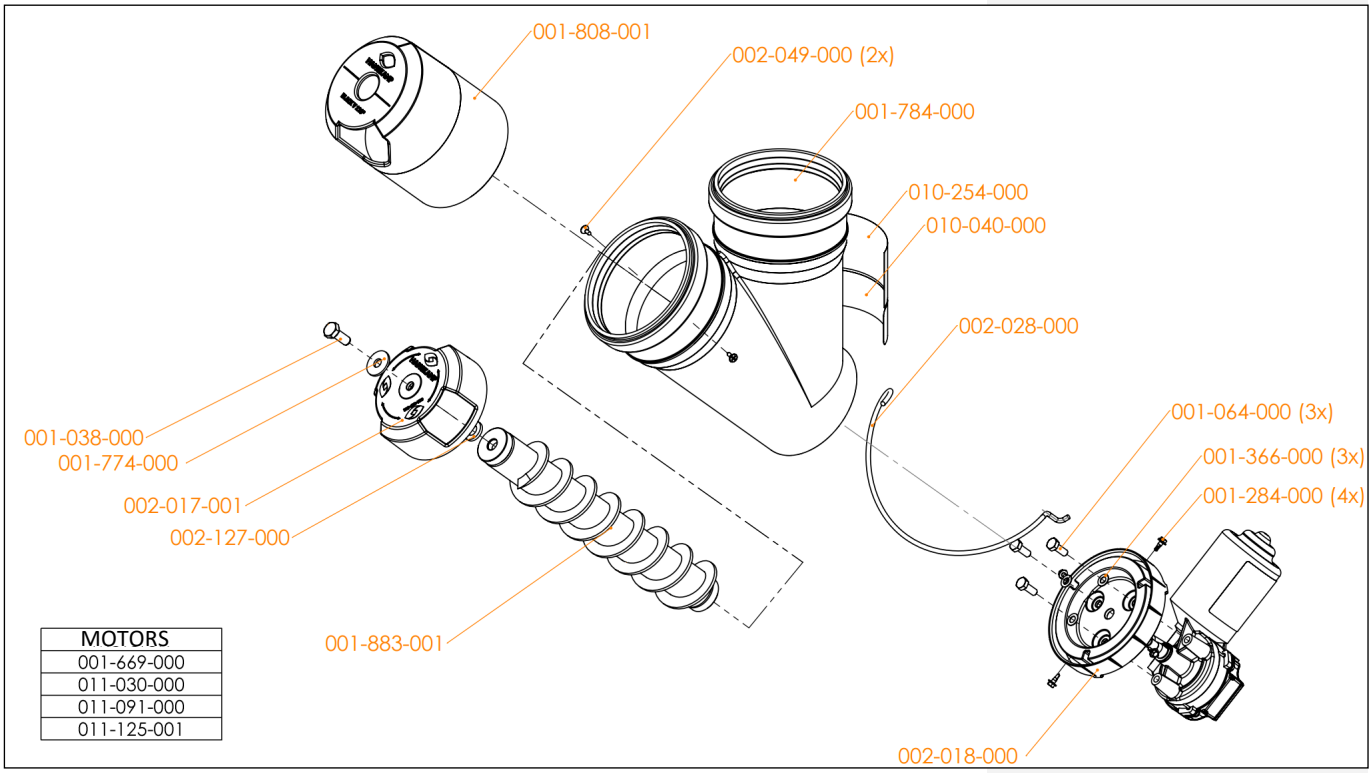


| MOTORS |
|---|
| 001-669-000 |
| 011-030-000 |
| 011-091-000 |
| 011-125-001 |

## Appendix 6 Description of parts Black-V 30 g

| Article number | Description | Quantity |
|---|---|---|
| 001-038-000 | Bolt M8 x 20 stainless steel A2 | 1 |
| 001-064-000 | Bolt M6 x 16 DIN 931 | 3 |
| 001-284-000 | Self-tapping screw, 3.5 x 9.5 mm | 4 |
| 001-366-000 | Spring wave washer M6 A2 DIN 137B | 3 |
| 001-774-000 | Washer M8 DIN 9021 A2 | 1 |
| 001-784-000 | T-piece 45°, 110 mm, PP, black | 1 |
| 001-808-000 | PVC pipe, 110 x 3.2 mm, 87 mm, black | 1 |
| 001-883-001 | Auger Black-V, steel | 1 |
| 002-017-000 | Dosing disc, plastic | 1 |
| 002-018-000 | Motor mounting plate for Black-V anti-spill | 1 |
| 002-028-000 | Guiding spiral, Ø 4 mm, stainless steel | 1 |
| 002-127-000 | Rubber ring, anti-slip | 1 |
| 010-254-000 | Safety sticker Black-V | 1 |
| 010-040-000 | Label with article number | 1 |
| 011-095-000 | RIM motor, 28 rpm, time-controlled *(variable)* | 1 |

**Description of parts Black-V 5 g & 10 g**

| Article number | Description | Quantity |
|---|---|---|
| 001-038-000 | Bolt M8 x 20 Stainless steel A2 | 1 |
| 001-064-000 | Bolt M6 x 16 DIN 931 | 3 |
| 001-284-000 | Self-tapping screw, 3.5 x 9.5 mm | 4 |
| 001-366-000 | Spring wave washer M6 A2 DIN 137B | 3 |
| 001-774-000 | Washer M8 DIN 9021 A2 | 1 |
| 001-784-000 | T-piece 45°, 110 mm, PP, black | 1 |
| 001-808-001 | PVC pipe with hole, for Black-V 120°, black | 1 |
| 002-017-001 | Dosing disc for Black-V anti-spill 120°, plastic | 1 |
| 002-018-000 | Motor mounting plate for Black-V anti-spill | 1 |
| 001-883-001 | Auger Black-V, steel *10 g* | 1 |
| 002-028-000 | Guiding spiral, Ø 4 mm, stainless steel | 1 |
| 002-049-000 | Metal screw, 3.5 x 12 mm A2, cross recess | 2 |
| 002-084-000 | Auger for powder, counter-clockwise, plastic *5 g* | 1 |
| 002-127-000 | Rubber ring, anti-slip *10 g* | 1 |
| 010-254-001 | Safety sticker Black-V, 10 rpm *10 g* | 1 |
| 010-254-101 | Safety sticker Black-V, 10 rpm, powder *5 g* | 1 |
| 010-040-000 | Label with article number | 1 |
| 011-091-000 | RIM motor, 10 rpm, time-controlled *(variable)* | 1 |

## Appendix 7 Accessories

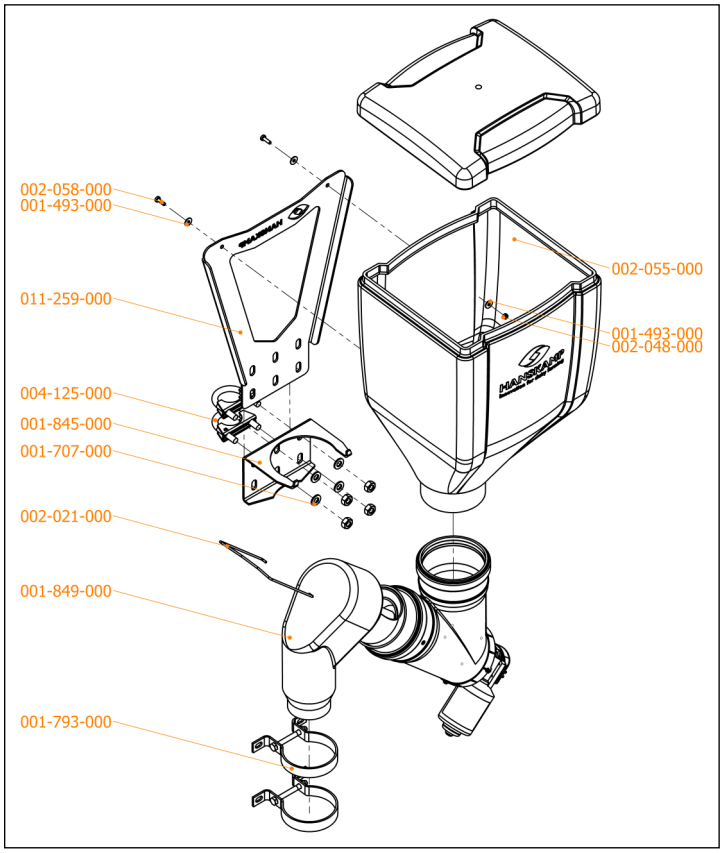


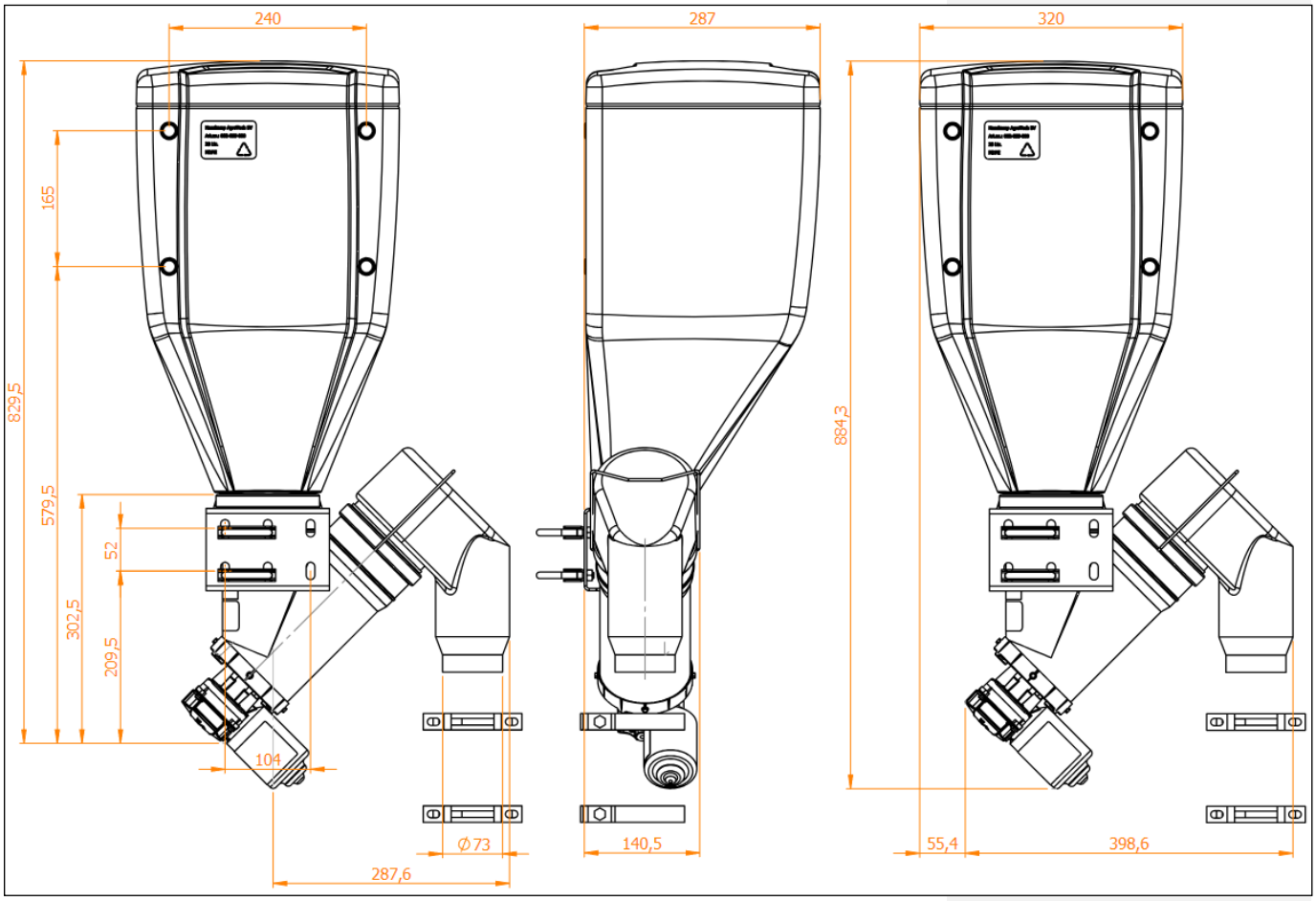

| Article number | Description | Quantity |
|---|---|---|
| 001-793-000 | Bracket for pipe, Ø 90 mm, stainless steel | 2 |
| 001-845-000 | Mounting bracket, 3 mm | 1 |
| 001-846-000 | Pipe mounting clamp M8, Ø 45 mm | 2 |
| 001-849-000 | Outlet Black-V | 1 |
| 002-055-000 | Storage container, 28 L - 17 kg, white | 1 |
| 002-021-000 | Bracket for outlet | 1 |
| 011-259-000 | Mounting plate | 1 |

**Optional motors for Black-V**

| Article number | Description | Fits in system | Quantity |
|---|---|---|---|
| 011-095-000 | RIM motor, time-controlled | DeLaval | 1 |
| 011-125-000 | IM motor, pulse-controlled | Lely A4 & A5 | 1 |
| 001-652-000 | Intelligent Motor | Milking parlour (incl. DeLaval, SAC, Fullwood, BouMatic) | 1 |
| 011-021-000 | SolidState 5 | Nedap | 1 |
| 001-001-000 | Dosing motor, grey | GEA/Westfalia | 1 |

**Optional motors for Black-V 120°**

| Article number | Description | Fits in system | Quantity |
|---|---|---|---|
| 011-091-000 | RIM motor, time-controlled, 10 rpm, 120° | DeLaval | 1 |
| 011-125-001 | IM motor, pulse-controlled, 10 rpm, 120° | Lely A4 & A5 | 1 |
| 011-030-000 | Intelligent Motor, 10 rpm, 120° | Milking parlour (incl. DeLaval, SAC, Fullwood, BouMatic) | 1 |
| 001-669-000 | SolidState 5, 10 rpm, 120° | Nedap | 1 |

**Hanskamp AgroTech BV**
**Xenonstraat 6**
**7031 HX Wehl**
**The Netherlands**
**Tel: +31 (0)314 - 393 797**
**www.hanskamp.com**

Also take a look at: