MultiDos 036-063-005

Vloeistofdoseersysteem luchtgestuurd
Air-controlled liquid dosing system
Flüssigkeitsdosiersystem, luftgesteuert
Système de dosage liquide air-contrôlé

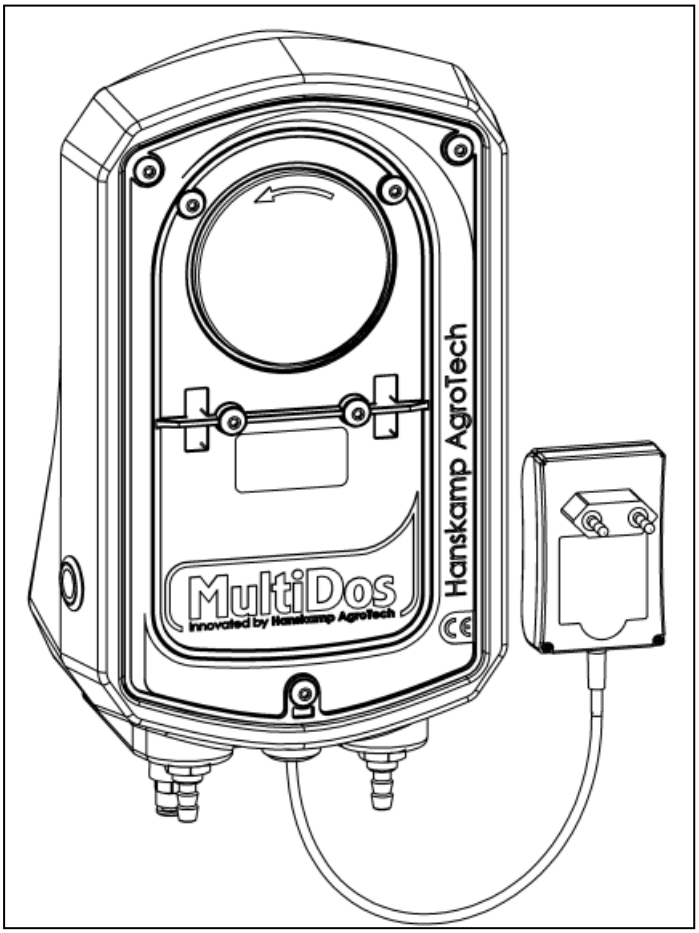

Installation and Operating Instructions **EN**

HANSKAMP
Innovation for dairy farming

Article number: 010-128-000

Date: December 2025
Version 1.6 - Translation of original Installation and Operating Instructions
According to Annex 1 Section 1.7.4. of the Machinery Directive 2006/42/EC

Wehl,
The Netherlands
www.hanskamp.com

Foreword

Contents of the installation and operating instructions

This manual contains the information required to install and operate the MultiDos correctly. Please read this information carefully, and make sure you understand everything before configuring the MultiDos. Failure to do so may result in damage to the equipment. Please contact Hanskamp if the information is not clear to you, or if you need more information.

All the information in this manual was compiled with care. Hanskamp is not liable for any errors or shortcomings in this manual. The recommendations are intended as guidelines. All instructions, illustrations and specifications in this manual are based on the latest information available at the time of publication. Your MultiDos may have improvements, features, or options that are not covered in this manual.

Applicability

The table below shows the MultiDos type number to which this manual applies.

Model designation

Model	Type number
Air-controlled MultiDos	036-063-005

Contact number of milking technology dealer

We recommend that you enter the name, phone number and e-mail of your milking technology dealer in the table below, so that you can always find the right information easily.

Name	
Address	
Phone number	
E-mail	

1. Introduction

The MultiDos from Hanskamp is a piece of proven, sustainable technology that makes dosing the right amount of liquid additive per day and per cow very simple. It is a smart, fast and affordable solution. MultiDos doses liquid concentrates over feed as if it were gravy, and cows love it!

The information in this manual is intended for dairy farmers and technicians.

- Dairy farmers can use the information to test and adjust the MultiDos.
- Technicians can use the information to install and set up the MultiDos.

2. Safety

2.1 Introduction

The 'Safety Warning' symbol warns about important safety messages on your MultiDos and in the manual. Use caution if you see this symbol; it means there is a risk of personal injury or death. Follow the directions of any safety messages.



Safety Warning Symbol

2.2 Warning texts

Note the use of the warnings **CAUTION** and **DANGER** in the safety messages. The following guidelines apply to these warnings:



Caution! Indicates a potentially hazardous situation which could result in minor personal injury or damage to equipment or the environment if the warning is ignored.



Danger! Indicates a potentially hazardous situation which could result in death or serious injury if ignored.

2.3 Safety instructions

You are personally responsible for operating and maintaining your MultiDos safely. You must make sure that you and anyone else who operates the equipment, performs maintenance on the MultiDos or works in the vicinity of the MultiDos, are familiar with all the safety information in this manual.

Safety is in your hands. Proper safety measures protect you and the people around you. Incorporate these measures into your safety programme. Make sure that everyone who uses, carries out maintenance, or works in the vicinity of the MultiDos is aware of these safety measures. Do not risk injury or death by ignoring the safety precautions.

- MultiDos owners must train users before the MultiDos is used. This training must be repeated at least once a year.
- The user must read, understand and follow all the safety and operating instructions in the manual.
- Anybody who has not read and understood all the safety and operating instructions must not operate the MultiDos.
- Do not make any modifications to the equipment. Unauthorised modifications may affect operation, affect the service life of the equipment, and/or result in personal injury.
- Only use original spare parts, and make sure that they are fitted by authorised technicians.

2.3.1 General safety

- Make sure that you have read and understood the manual and the safety instructions before connecting the power supply to operate or adjust the MultiDos, or turning it off for maintenance.
- Only trained personnel may operate the MultiDos.
- Install all guards and safety devices before using the MultiDos.
- Wear proper protective clothing and equipment.
- Before cleaning the MultiDos or performing maintenance on it, switch off the power supply of the MultiDos by removing the plug from the socket.
- Make sure that phone numbers of emergency medical care available in your area are at hand.
- If you have any other questions, please contact your milking technology dealer.
- Review all safety-related topics with all users at least once a year.

2.3.2 Electrical safety

- Only a qualified electrician may install the MultiDos power supply.
- Check whether the earthing of the electrical system and all parts of the MultiDos comply with local rules and regulations.
- Replace any damaged electrical cables, cable sheaths, switches and parts immediately.
- Isolate or switch off the power supply before opening the MultiDos and working on the electrical system.

2.3.3 Safety during installation

- Make sure that you have read and understood the instructions in this manual.
- Check whether the MultiDos has been installed correctly, as described in the manual.

2.3.4 Safe operation

- Make sure that you have read and understood the manual and the safety instructions before connecting the power supply to operate or adjust the MultiDos, or turning it off for maintenance.
- Only trained personnel may operate the MultiDos.
- Before cleaning the MultiDos or performing maintenance on it, switch off the power supply of the MultiDos by removing the plug from the socket.
- Install the lid and other safety devices before using the MultiDos.
- Keep hands, feet, hair and clothing away from live parts.
- Keep all unauthorised persons, especially small children, away from the MultiDos at all times.
- Before connecting the MultiDos to the power supply, make sure that all parts are properly tightened and that all cables and mountings are in good condition.
- If you have any other questions, please contact your milking technology dealer.

2.3.5 Safety during maintenance

- Make sure that you have read and understood the manual and the safety instructions before connecting the power supply to operate or adjust the MultiDos, or turning it off for maintenance.
- Only trained personnel may service and maintain the MultiDos.
- Before cleaning the MultiDos or performing maintenance on it, switch off the power supply of the MultiDos by removing the plug from the socket.
- Wear protective clothing and safety glasses when working on the electrical system.
- Make sure all guards and safety devices are installed when you have finished maintenance work.

2.3.6 Safety messages

- This chapter lists the general safety messages. Specific safety messages, where potential hazards may arise if the procedures or instructions are not followed, are included in the appropriate sections of this manual.

2.3.7 Compressed air

- See www.hanskamp.com for the instructions concerning compressed air.

3. Installation and operating instructions

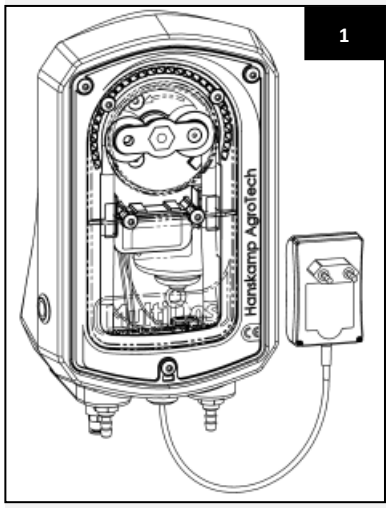

General description
The Hanskamp MultiDos air-controlled dosing system is a system that doses liquids accurately. Initially, this product was developed for dosing PP glycol and similar (highly viscous) liquid feed supplements.

Like the PipeFeeder and other Hanskamp dosers, the MultiDos dosing system can be linked to the most common feeding systems. This installation instruction explains how to install the MultiDos dosing system (Fig. 1). Always read these instructions completely, and follow the safety instructions. Installation examples can be consulted at www.hanskamp.com. The order numbers and names of some parts are listed in the appendix.

Transport and storage
The MultiDos dosing system consists of a MultiDos wall mounting in which a MultiDos dosing pump is mounted. The MultiDos dosing system is packed in a cardboard box. Several boxes can be stacked on a pallet, or boxes may be shipped separately.

Caution! Always move the pallet using a suitable means of transport (forklift, pallet fork, pallet truck, etc.).

Caution! When unpacking the pallet, parts may fall from it.

Safety
The user and installer are responsible for operating and maintaining the MultiDos safely. When replacing the pump hose (HanskampQualityTube, art. no. 003-512-005), both the electrical system and the air system must be disconnected to avoid dangerous situations.

Type designation; can be found on the pump housing

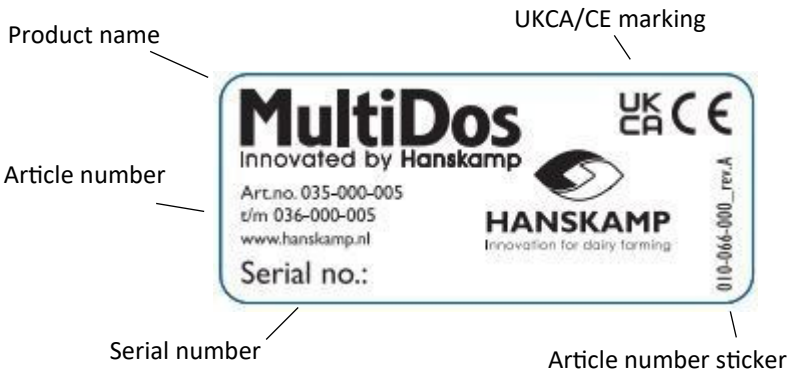

Caution: the stickers present may not be removed!

Maintaining stickers
- Keep safety stickers clean and legible.
- Clean safety stickers with soap and water.
- Do not use solvents or abrasives that could damage safety stickers.
- Replace missing or illegible safety stickers.
- Safety stickers are available from Hanskamp. Always use the article numbers in correspondence.

Mounting of Wall-mount version

1. Check whether all parts are present, in accordance with the parts list at the end of the manual.
2. Unscrew the outer 3 Allen screws (art. no. 003-510-001), with which the MultiDos pump is attached (fig. 6), and remove the union nuts of the bulkhead fitting (art. no. 003-572-000). Now remove the pump. The easiest way to do this is to remove the flat cable lugs (art. no. 001-290-000 & 001-296-000) from the pressure sensor and the pushbutton, so that the complete pump can be removed from the pump housing.

Caution! Place the housing (wall mounting) at a distance of up to 2 metres from the bottom of the storage tank.

Caution! Disassembly may have caused some wires to come loose. A diagram on page 17 shows how these should be connected.

Caution! Place the MultiDos near a wall socket.

The MultiDos can be mounted in 2 ways.

3a. Wall mounting:
Mount the DIN rail provided vertically on the wall. Mounting material is not included. Then slide from the top of the wall mounting over the DIN rail (fig. 4).

3b. Mounting on a horizontal surface:
Drill holes in the bottom of the MultiDos. You can decide the position of the holes yourself. The minimum distance between the push-in fitting and the plate is shown in Figure 5. Fasten the wall mount. Fastening material is not included.

2

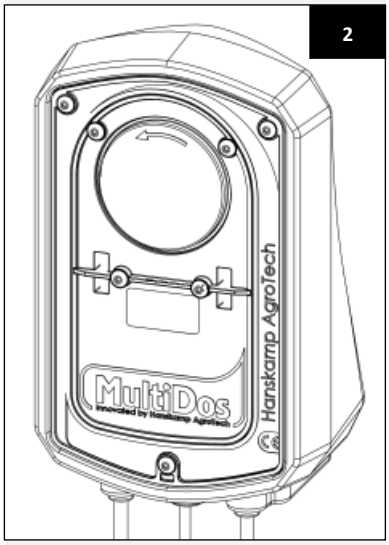

3.1

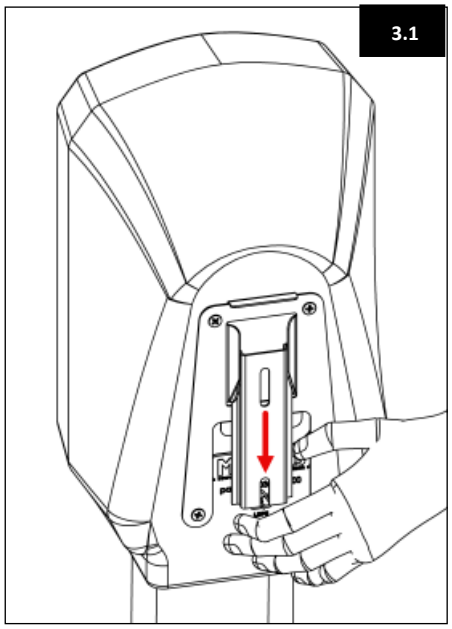

3.2

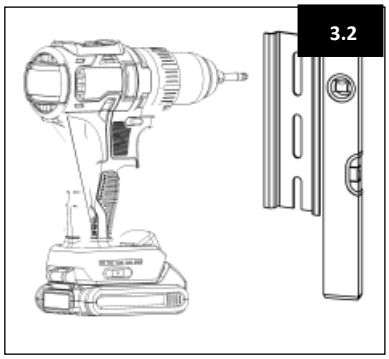

4

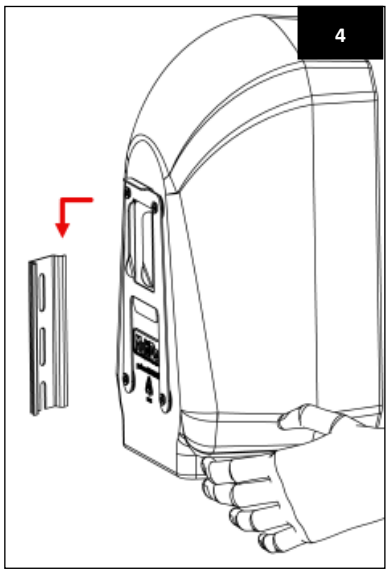

5

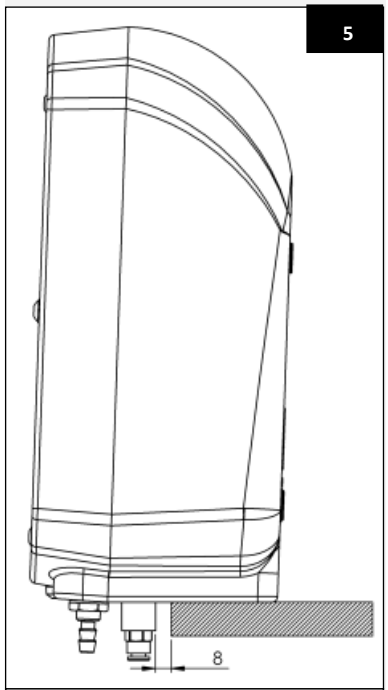

Distance between push-in fitting and the plate: ± 8 mm

4. Unscrew the cover from the pump housing.
5. Unscrew and remove the pump impeller by turning it manually in a counterclockwise direction.
6. Insert the bulkhead fitting (art. no. 003-572-000) with the HanskampQualityTube into the outer two holes of the wall mount, and tighten them with a union nut, as shown in Figure 7.
7. Replace the flat cable shoes (art. no. 001-290-000 & 001-296-000) back on the pushbutton and pressure sensor (see p. 17).
8. Evenly screw the pump housing with the corresponding screws (art. no. 003-509-002) hand-tight onto the wall mounting (Fig. 6).

Caution! Turning the impeller by hand may cause light hand injuries.

Caution! Hanskamp only guarantees that the system will work properly if the suction hose is no longer than 2 metres.

Caution! The HanskampQualityTube is not acid-resistant. An acid-resistant hose kit can be ordered from Hanskamp on request.

Caution! Always cut the hose straight. If the hose is cut at an angle, the system may not work properly.

Caution! Make sure that the end of the suction hose is placed at the very bottom of the storage tank, otherwise the pump will not be able to pump all the liquid.

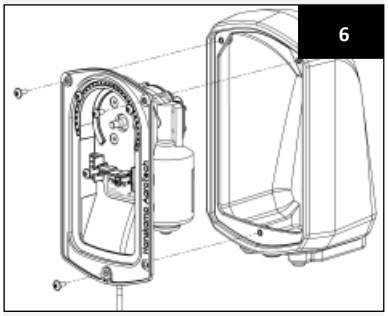

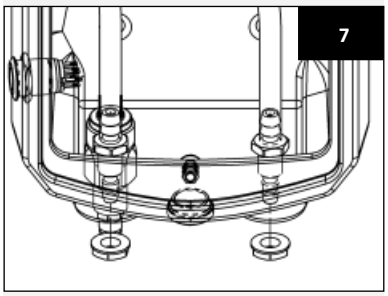

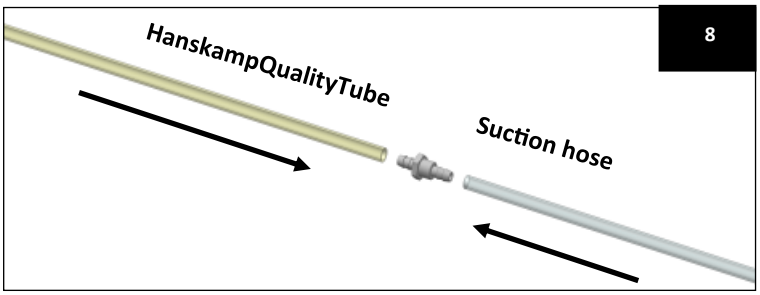

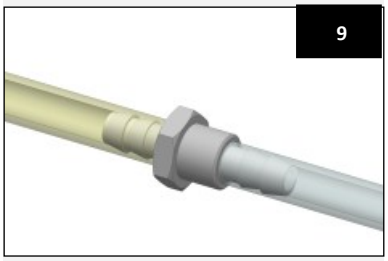

9. Now slide the suction hose onto the bulkhead fitting on the right (fig. 8 and 9).
10. Repeat with the pressure hose on the left side (fig. 11).
11. Bend the HanskampQualityTube as much as possible in the shape of the pump housing (fig. 10 and 12).

Caution! Always cut the hose straight. If the hose is cut at an angle, the system may not work properly.

10

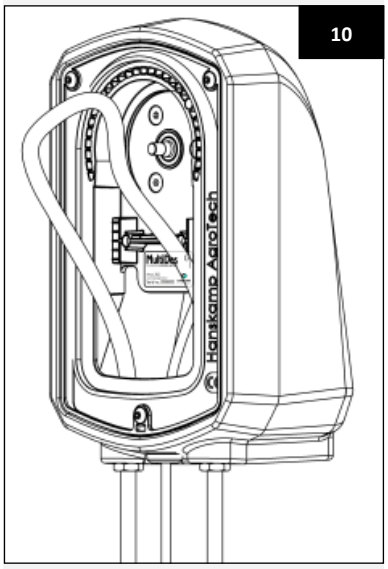

12

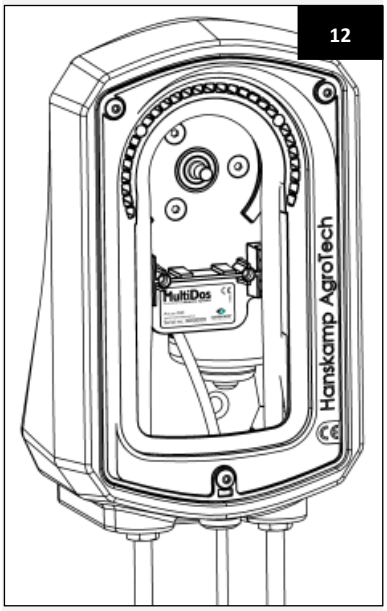

11

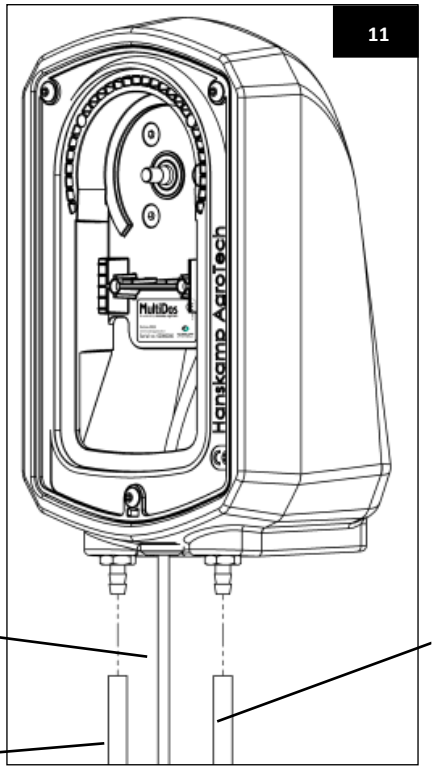

Power supply cable

Pressure hose

Suction hose

12. Turn the impeller with the side of the conical recess on the shaft of the pump motor. On the last stroke, press the HanskampQualityTube into the recess of the pump housing. The HanskampQualityTube is now clamped between the rollers and the pump housing. Hand-tighten the impeller onto the motor shaft (see fig. 14 and 15).

Caution! The hose must be pressed into the curve of the pump housing as neatly as possible (fig. 12).

13. Position the transparent pump cover (art. no. 003-502-000) in the correct place in front of the cover recess in the pump housing. Tighten the 4 corresponding screws (art. no. 003-509-002) evenly until the cover is securely attached (fig. 13 and 15). Caution: secure is secure!
14. Mount the pneumatic line (art. no. 001-199-000) in the push-in fitting (art. no. 001 -450-000) of the MultiDos (fig. 16). Attach the other end of the pneumatic line to the robot's air connection. See www.hanskamp.com for the instructions concerning compressed air.

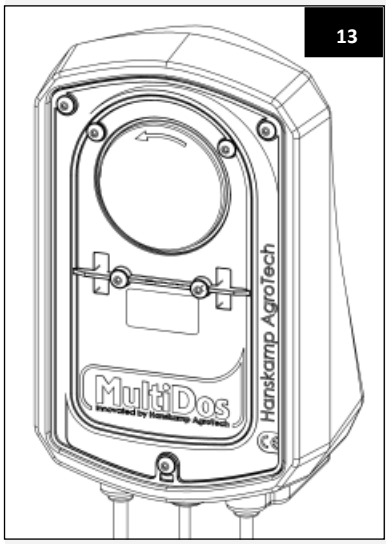

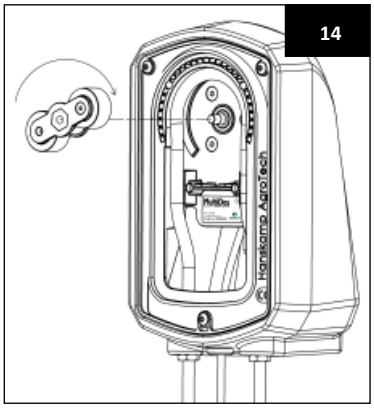

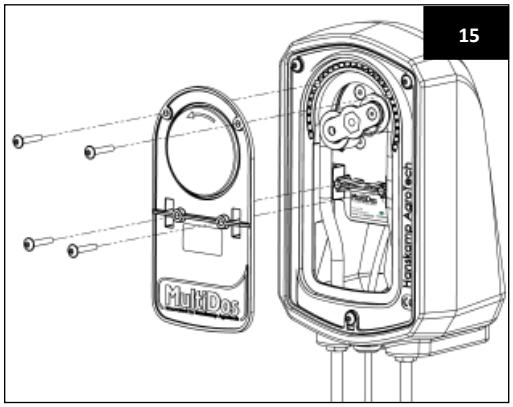

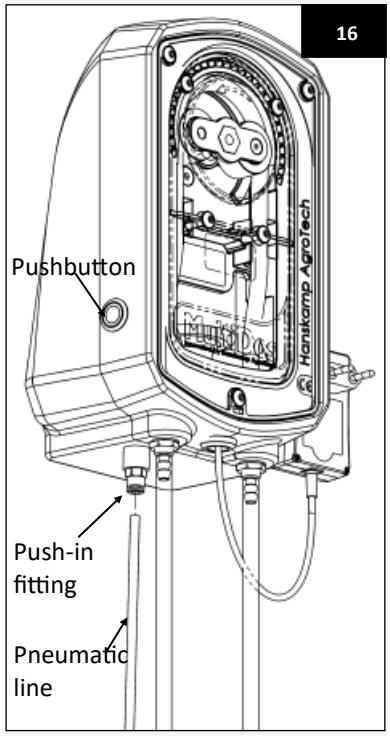

15. Plug the power supply of the MultiDos into the nearest wall socket, and test if the MultiDos works by pressing the pushbutton (art. no. 001-264-000). If the pushbutton does not work, check whether everything is connected correctly (see page 17).

Maintenance

Check the MultiDos dosing system daily for malfunctions and wear by visually inspecting the suction hose, pressure hose, electrical wiring, pneumatic line, and attachment to the pneumatic line. Periodically check the delivery rate, and calibrate if necessary. When the HanskampQualityTube is worn out (leaking) due to intensive use, it must be replaced according to the instructions. A service kit is available from Hanskamp. Also check the rollers and bearings for wear. These are also available from Hanskamp as a service kit.

Calibration

When calibrating, the motor has to be controlled manually with the pushbutton until liquid comes out of the nozzle.

Caution! Nothing will happen during the first few rotations, because the impeller first has to take up the slack on the motor shaft.

The MultiDos is calibrated in the same way as a normal type of feed dispenser. To do this, follow the instructions in the manual of the associated feeding computer.

Caution! During maintenance or disassembly, always switch off the power supply to the pump motor first, and make sure that there is no pressure in the pneumatic line. Make sure that any storage container present is empty, otherwise there is a risk of minor electric shocks.

Disassembly
During disassembly, all parts must be separated and disposed of according to type of material.

Caution! There is a risk of getting crushed during disassembly. Minor hand injuries may also result from gripping the roller mechanism.

Overview of changes made in these installation and operating instructions

No.	Release date	Chapter(s)	Comments
V1.1	01/2015		First edition
V1.2	06/2019	All	Multiple changes in all chapters
V1.3	04/2022	Page 15 to 21	Adaptation to IM pulse motor
V1.4	01/2023	Pages 7 + 14	UKCA logo added
1.5	08/2024	Pages 8 + 16 + 20	Page 8 Adjusted images and added DIN rail text for wall mounting. Page 16 New exploded view. Page 20 Item numbers added for wall mounting.
1.6	12/2025	Pages 1 + 21	Page 1 Place name change. Page 21 Change of address Hanskamp.

When in operation

Caution! When cleaning (flushing) hoses and gripping the roller mechanism, there is a risk of minor hand injuries. If the engine is uncovered (no cover installed), take care to avoid minor electric shocks.

Warranty limitations
Costs and expenses resulting from the following are excluded from the warranty:
- Using the equipment improperly, in violation of the specifications in the installation and operating instructions;
- The consequences of any intervention by mechanics other than mechanics approved by Hanskamp for carrying out certain work;
- Incidents such as freezing, ice, fire, flood, flooding or any other problems caused by excessive water, and lightning;
- Defective electrical system or earthing;
- Using compressed air that does not meet Hanskamp's quality standards;
- Damage to the electrical system caused by pests and the like;
- Using compressed air improperly, in violation of the compressed air instructions drawn up by Hanskamp in collaboration with suppliers, which causes a defect in the pneumatic systems. These compressed air regulations can be consulted at www.hanskamp.com.

The warranty does not apply to consequential damages unrelated to the machine itself. All systems have been tested, However, in the event of defects, Hanskamp AgroTech BV cannot be held responsible for consequential damage.

4. FAQs

Common problem	Possible cause	Solution
The liquid flows back from the pump into the storage tank.	The HanskampQualityTube is leaking. The rollers are worn. The bearing is worn.	Replace the hose. Replace the rollers. Replace the bearing.
The fluid runs out of the nozzle when the engine is idle.	Air infiltration between the pump and the nozzle.	Press the pressure hose onto the nozzle again. Check or improve the seal between the fitting and the nozzle. Mount the nozzle completely vertically.
The motor runs, but does not pump any liquid.	The suction hose is blocked. The impeller is mounted the wrong way round.	Clean the suction hose (if necessary, blast air through it). Install the impeller the other way around.
Leakage at the bulkhead fitting.	The hose is too loose on the fitting.	Fit a hose clamp (art. no. 003-547-000) or ty-rap around the coupling/hose.

Copyright and disclaimer
The information in this publication is for informational purposes only, and is not intended as a sales quote. The products offered may differ from the images. Any brand or product references in this manual are for identification purposes only. The company and product names mentioned in this manual are trademarks. No part of this publication may be reproduced or made public without the prior written consent of Hanskamp AgroTech BV. Although this publication has been compiled with the greatest care, Hanskamp AgroTech BV is not liable for any damage that may arise due to any errors or omissions it might contain. The Dutch installation and operating instructions are the original installation and operating instructions. Translations into other languages are based on the Dutch installation and operating instructions as a source document. Hanskamp AgroTech BV accepts no liability for differences between the translations. If there are any doubts about the content and accuracy of the translated installation and operating instructions, the Dutch installation and operating instructions shall prevail.

Declaration of incorporation of complete machines IIA

According to Annex IIA of the Machinery Directive 2006/42/EC, for completed machines

We,
Hanskamp AgroTech BV
Broekstraat 17
7009 ZB Doetinchem
The Netherlands,

Authorised compiler(s) of the technical file:

H.J. Hanskamp,

declare under our sole responsibility that the following product:

Air-controlled MultiDos (24 VDC), type number 036-063-000,
Universal dosing system for liquids,

to which this declaration relates, complies with the provisions of the following directive(s):

- Machinery Directive 2006/42/EC
- EMC Directive 2014/30/EU

The product also complies with the provisions of the following standards:

- NEN-EN-IEC 60204-1
- NEN-EN-ISO 12100:2010
- NEN-EN 349
- NEN-EN-ISO 13857

If the MultiDos is not connected and the prescribed safety instructions are not used, this Declaration of Conformity is not applicable and no rights can be derived from this declaration.

Doetinchem, the Netherlands, 04-12-2023 H.J. Hanskamp



Appendix 1 Information about nozzle holder 003-518-000

003-518-000: Drill holes to mount the pressure hose and nozzle. Insert the hose through the centre hole, attach the nozzle to the hose, then tighten the nozzle.

Caution! If the nozzle cannot be shielded, the nozzle holder (art. no. 003-518-000) must always be used.

Caution! Always mount the nozzle vertically.

003-518-000	
Shielded	**Unshielded**
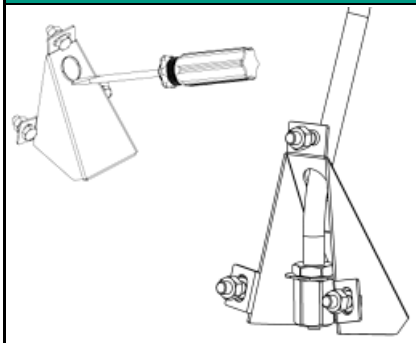	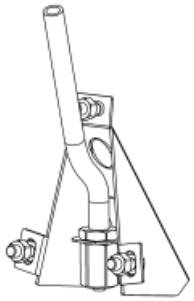

Distances between holes 003-518-000

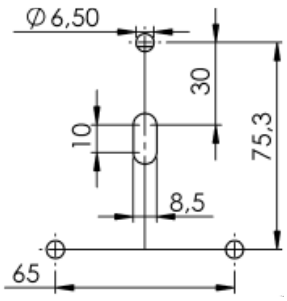

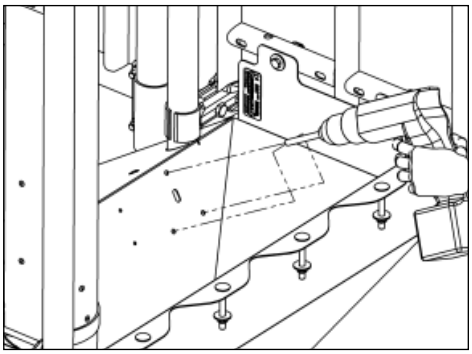

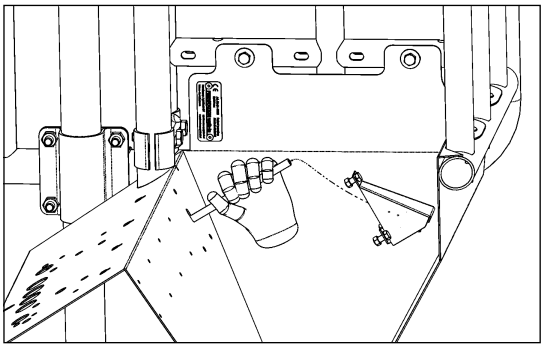

Appendix 2 Article number structure and exploded view of air-controlled MultiDos pump

Art. no. 036-363-005

Product group	Colour	Motor	Type	Hose
36 = MultiDos 28 rpm	1 = Black 2 = Green 3 = Blue 4 = Red 5 = Orange	6 = Air-controlled (Lely A3 & A4/A5 with FPS)	3 = Housing + 1 pump	5 = Qprene

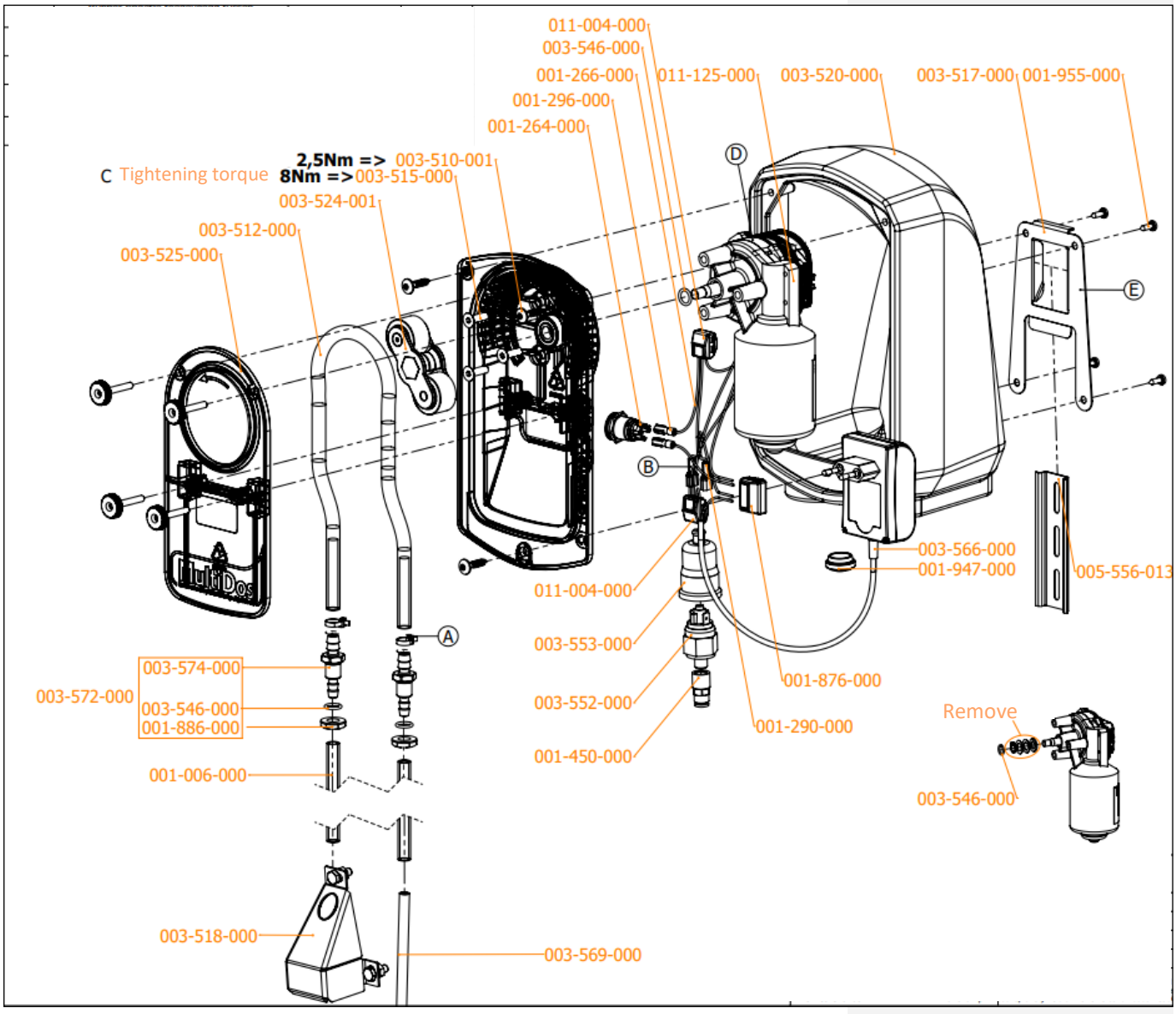

Appendix 3 Exploded view of MultiDos impeller and MultiDos connection diagram air-controlled

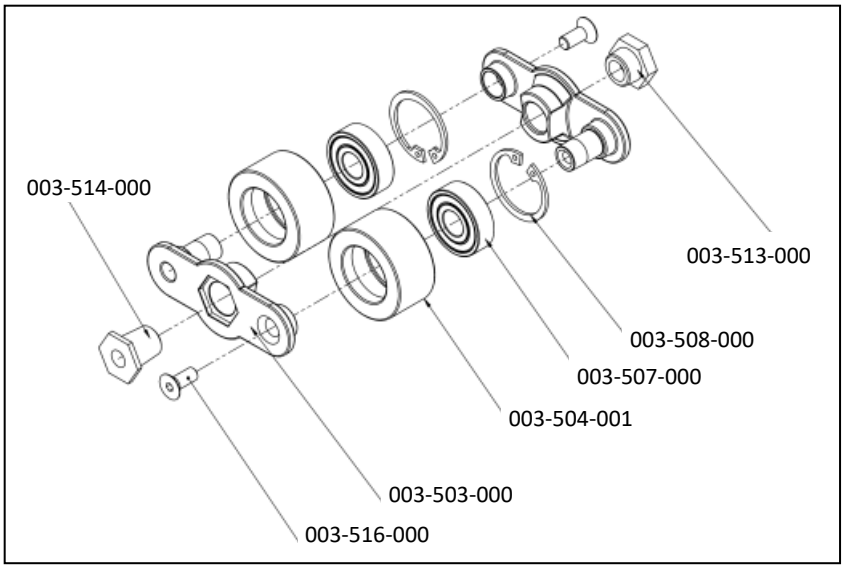

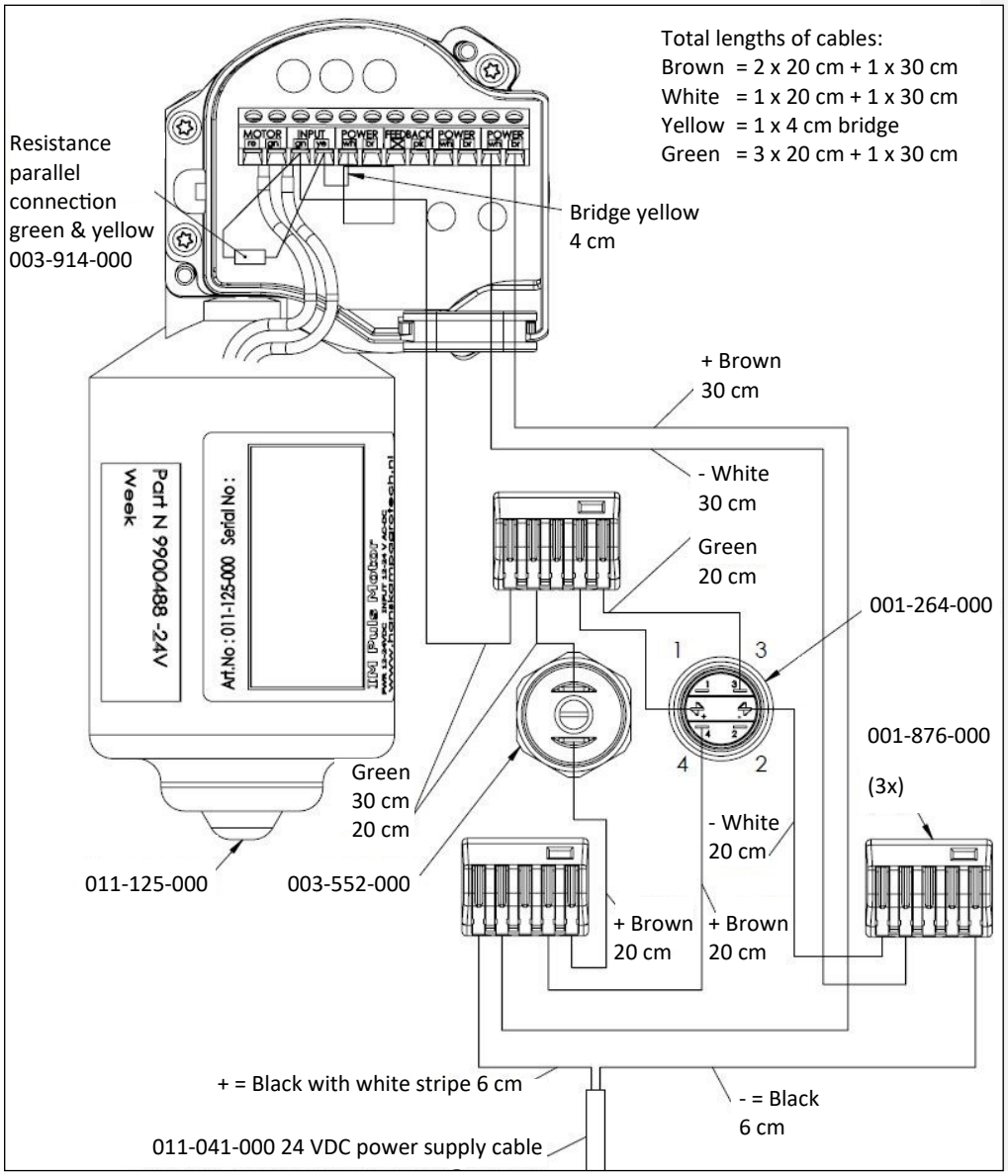

Appendix 4 HanskampQualityTube warnings and usage instructions

003-512-005 HanskampQualityTube

Warnings and usage instructions for dealers, sellers and users of the MultiDos.



Caution! The HanskampQualityTube is not intended for medical use!

Read these warnings and instructions carefully before use or resale.

The following warnings and instructions must be followed to prevent breaks or leaks in the hose, which could result in damage to property and/or personal injury during use.

Warnings

1. The HanskampQualityTube is made of thermoplastic, and its performance depends on the temperature and pressure.
2. Some liquids can be absorbed or extracted by the HanskampQualityTube. The end user is responsible for observing and documenting the specifications, safety regulations and documentation of the HanskampQualityTube.
3. The end user is responsible for determining the suitability of the hose formulation for the application.
4. The HanskampQualityTube is not intended or suitable for medical applications. The use of this hose in a medical application is the sole responsibility of the dealer and/or end user.
5. To avoid catastrophic disconnection during use, detachable clamps must always be used when attaching the hose to a coupling or fitting.
6. The end user is advised to have a back-up system available in case the hose ruptures.
7. No hose will last forever, and this also applies to hoses used in the MultiDos; following prolonged use or improper installation, the hose will rupture.

The following factors will affect the service life of the HanskampQualityTube in the MultiDos liquid pump:

- The liquid being pumped;
- Percentage closure of the hose wall;
- Pump speed (in combination with roller strokes per minute) and total number of strokes;
- System back pressure;
- Temperature of the fluid being transported and ambient temperature;
- Frictional resistance due to deficient maintenance or wear on the rollers and guides;
- Twisted, kinked or excess length of the HanskampQualityTube installed in the MultiDos;
- Wall thickness and thickness variation.

To prevent any damage to property, or consequential damage, always do the following when using the HanskampQualityTube in the MultiDos pump:

- Carefully set up and monitor each of the factors mentioned above while using the HanskampQualityTube in the MultiDos;
- Read and respect the instructions of Hanskamp (manufacturer) or dealer of the equipment and the MultiDos with regard to installation, use, maintenance and disassembly;
- Inspect the HanskampQualityTube for damage before installation;
- Check the HanskampQualityTube is the correct length, and that the hose is not installed twisted or kinked in the MultiDos;
- Constantly check the hose circuit for signs of breaks or leaks in the HanskampQualityTube, and take action if necessary.

Material safety data sheets are always available from Hanskamp.

Appendix 5 Loose parts for the air-controlled version (Lely A3 & A4/A5 with FPS)

For maintenance or any other reason, spare parts can be ordered from your supplier.
Please use the product numbers indicated in the tables below.

Parts 003-525-000 / 003-580-000 MultiDos pump		
Art. no.	**Description**	**Quantity**
011-125-000 / 011-125-001	Motor 10 rpm, with 3 magnets / Motor 28 rpm	1
001-006-002	PVC suction hose, Ø 7 x 10	2 m
001-006-005	PVC pressure hose, Ø 7 x 10	5 m
003-914-000	Resistance	1
001-947-000	Membrane grommet	1
003-501-000	MultiDos pump housing	1
003-502-000	MultiDos pump housing cover	1
003-507-000	Ball bearing	1
003-509-002	Knurled screw with plastic head with Allen insert, 3 mm, M5 x 30, A2	4
003-512-005	HanskampQualityTube - Qprene	53 cm
003-515-000	Allen screw A2 DIN 7991 M6 x 20	3
003-524-000	MultiDos impeller, red	1
003-546-000	O-ring 10 x 2	1
003-572-000	Bulkhead fitting	2
010-066-000	Serial number sticker	1

Parts for MultiDos wall-mount version		
Art. no.	**Description**	**Quantity**
003-510-001	Allen screw with flange M5 x 10	3
003-518-000	Complete nozzle holder	1
003-580-000	Complete MultiDos pump	1
003-517-000	Wall bracket for wall mounting 1mm	1
005-556-013	DIN rail l=110 mm	1
001-955-000	Sheet metal screw Ckkk 4x13 stainless steel A2	4

Parts 003-524-000 MultiDos impeller		
Art. no.	**Description**	**Quantity**
003-503-000	MultiDos impeller part, red	2
003-504-001	Plastic roller, Ø 31.6 mm	2
003-507-000	Ball bearing	2
003-508-000	Housing retaining ring	2
003-513-000	Stainless steel conical adapter	1
003-514-000	Stainless steel adapter	1
003-516-000	Allen screw with countersunk head	2

Wall mounting colour options	
Art. no.	**Description**
003-520-000	Black MultiDos wall mounting, including 3 inserts
003-540-000	Green MultiDos wall mounting, including 3 inserts
003-541-000	Blue MultiDos wall mounting, including 3 inserts
003-542-000	Red MultiDos wall mounting, including 3 inserts
003-543-000	Orange MultiDos wall mounting, including 3 inserts

Extra for air-controlled (Lely A3 & A4/A5 with FPS)		
Art. no.	**Description**	**Quantity**
001-199-000	Pneumatic line PA 12W 6 x 4, black	5 m
001-264-000	Stainless steel pushbutton IP 66	1
001-290-000	Flat cable lug 6.3 x 0.8	2
001-296-000	Flat cable lug 2.8 x 0.5, fully insulated, 1.5 mm	2
001-450-000	Straight coupling 1/8” bi x 6 mm	1
001-876-000	WAGO connection terminal 5-way	3
003-547-000	Hose clamp	1
003-552-000	Pressure sensor 1/8” 1 - 10 bar	1
003-553-000	Rubber protective cap for pressure sensor	1
011-041-000	Plug-in power supply 24 VDC	1

Hanskamp AgroTech BV
Xenonstraat 6
7031 HX Wehl
The Netherlands
Tel: +31 (0)314 - 393 797
www.hanskamp.com

Also take a look at: