BeddingCleaner

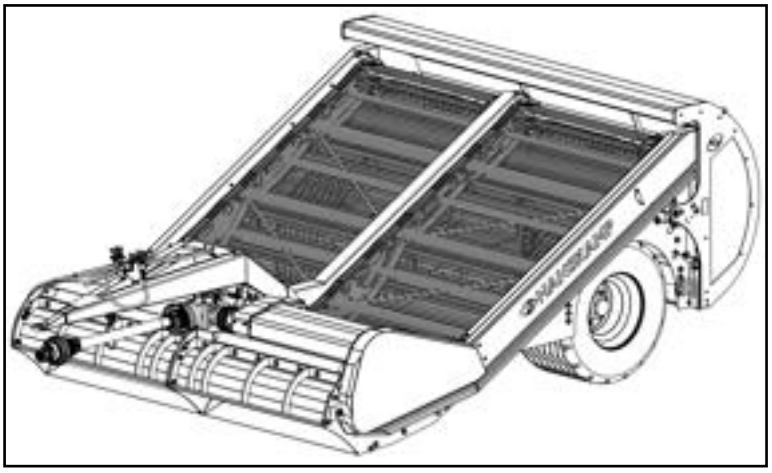

VrijLevenStal reinigingsmachine
FreeLivingBarn Cleaning machine
FreiLebenStall Reinigungsmaschine
Machine de nettoyage pour stabulation libre

Installation and Operating Instructions **EN**

HANSKAMP
Innovation for dairy farming

Article number: 010-422-000

Date: May 2026
Version 1.2 - Translation of Original Installation and Operating Instructions
According to Annex 1 Section 1.7.4 of the Machinery Directive 2006/42/EC

Wehl,
The Netherlands
www.hanskamp.com

Foreword

Contents of the Installation and Operating Instructions

This manual contains the necessary information to correctly set up, maintain, and operate the BeddingCleaner. Carefully study this information and ensure that you understand everything before using the BeddingCleaner. Failure to do so may result in damage to the BeddingCleaner or its surroundings. If any information is unclear or if you require further details, please contact Hanskamp.

All information in this manual has been carefully compiled. Hanskamp is not liable for any errors or omissions in this manual. The recommendations are intended as guidelines. All instructions, images, and specifications in this manual are based on the most up to date information available at the time of publication. Your BeddingCleaner may contain improvements, features, or options that are not covered in this manual.

Applicability

The table below shows the model numbers of the BeddingCleaner to which this manual applies.

Model designation

Model	Type Number
BeddingCleaner 5.2	006-000-000

Contact details of milking technology dealer

We recommend that you note the name, telephone number, and email address of your local milking technology dealer in the table below. This way, you can easily find the correct contact details when needed.

Name	
Address	
Phone number	
Email Address	

1. Introduction

With the BeddingCleaner from Hanskamp, cleaning FreeLivingBarns becomes efficient and reliable. The machine removes cow manure from the top layer of the bedding, sifts it, and allows the clean bedding to fall back onto the stall floor while the manure is collected in a separate container. The collected manure can then be stacked and stored outside the barn.

The BeddingCleaner is not only suitable for new FreeLivingBarns with sand bedding, but can also be used in existing barns with organic materials such as straw, sawdust, miscanthus, and straw pellets. This provides flexibility for farmers who wish to optimise their existing barn without major renovations.

The combination of the BeddingCleaner with a FreeLivingBarn offers several benefits. It improves cow health, increases milk production, and reduces ammonia emissions. In addition, cows display more natural behaviour, and feed intake improves. All of this contributes to a higher level of animal welfare.

The information in this manual is intended for both users and technicians.

- Users can apply this information to correctly adjust the BeddingCleaner and perform maintenance according to the manufacturer's instructions.
- Technicians use this information to carry out maintenance on the BeddingCleaner correctly, following the manufacturer's instructions.

2. Safety

2.1 Introduction

The Safety Warning Symbol indicates important safety messages on your BeddingCleaner and in this manual. Pay close attention when you see this symbol: there is a risk of personal injury or even fatal injury. Always follow the accompanying safety instructions.



Safety Warning Symbol

2.2 Warning Terms

Pay attention to the use of the warning terms **CAUTION** and **DANGER** in safety messages. The following guidelines apply to these warning terms:



Caution! Indicates a potentially hazardous situation that, if not avoided, may result in minor injury or damage to equipment or the environment.



Danger! Indicates a hazardous situation that, if not avoided, could result in serious or fatal injury.

2.3 Safety Instructions

You are responsible for the safe operation and maintenance of your BeddingCleaner. Ensure that everyone who uses the BeddingCleaner, performs maintenance, or works in the vicinity of the machine is informed about these safety measures.

You are the key to safety. Good safety practices protect you and those around you. Use these measures as part of your safety policy. Ensure that everyone who uses the BeddingCleaner, performs maintenance, or works in the vicinity of the machine is informed about these safety measures. Prevent injury or fatal accidents by strictly following the safety instructions.

- Owners of the BeddingCleaner must train users before the machine is put into operation. This training should be repeated at least once per year.
- The user must read, understand, and follow all safety and operating instructions in this manual.
- Persons who have not read and understood these instructions should not operate the BeddingCleaner.
- Do not make any modifications to the equipment. Unauthorised modifications may negatively affect performance, shorten the lifespan, and/or lead to personal injury.
- Only use original spare parts and ensure they are installed by qualified technicians.

2.3.1 General safety

- Ensure that you have read and understood this manual and all safety instructions before operating, adjusting, or performing maintenance on the BeddingCleaner.
- Only trained personnel may operate the BeddingCleaner.
- Ensure that no people or animals are within the working area of the BeddingCleaner.
- Install all guards and safety features before operating the BeddingCleaner.
- Always wear appropriate personal protective equipment (PPE).
- Disconnect the BeddingCleaner from the tractor before carrying out any maintenance work.
- Ensure that you have the emergency medical contact numbers for your region readily available.
- Review all safety-related topics with all users at least once per year.
- Covers that shield rotating parts must always be in place and properly mounted during operation of the BeddingCleaner. Without these covers, the BeddingCleaner will not meet Hanskamp's safety standards.
- It is forbidden to transport people or objects with the BeddingCleaner.
- It is forbidden to drive the BeddingCleaner on public roads.
- All controls of the BeddingCleaner must be positioned in such a way as to prevent unintentional or unexpected operation.
- Never leave the driver's seat of the drive vehicle while the machine is in operation.
- Adjust the driving speed to the conditions within the FreeLivingBarn for safe and proper operation.
- Take appropriate safety precautions when dealing with hydraulic leaks. Hydraulic fluid under pressure can penetrate the skin and cause serious injury or infection.
- Be aware of the high pressure in the hydraulic system.
- Be aware of the air pressure in the tyres of the BeddingCleaner.
- Rotating and sharp parts of the BeddingCleaner can cause serious injury if safety measures are not followed. Switch off the machine and disconnect it before performing maintenance.
- Contact your milking technology dealer for any further questions.

2.3.2 Safety during coupling and adjustment

- Ensure that you have read and understood the instructions in this manual.
- Make sure that the BeddingCleaner cannot roll away during coupling. Use wheel locks if necessary.
- Check that the BeddingCleaner is complete, that all guards are fitted, and that there is no damage to the machine that could affect its operation.
- When coupling the BeddingCleaner, observe the maximum load pressure of the towing vehicle's drawbar.
- Check that there is sufficient clearance between the towing vehicle's drawbar and the coupling point on the machine.
- Secure the PTO shaft guards against rotation by correctly attaching the supplied chains.
- Only attach the PTO shaft when the towing vehicle is switched off.
- Ensure that the PTO shaft is securely fixed to the PTO stub of the towing vehicle.

- Do not engage the PTO when the towing or driving vehicle is switched off.
- Do not exceed the maximum speed of the BeddingCleaner.
- Be aware that rotating parts may continue to spin for a few seconds after the BeddingCleaner has been switched off.
- Any slip clutches and freewheel clutches should be mounted on the BeddingCleaner side of the PTO shaft.
- Always observe the maximum allowable angle of rotation for the PTO shaft when working with the BeddingCleaner.
- Replace PTO shaft guards immediately if they show signs of wear or damage.
- Ensure that hydraulic lines are pressure-free before coupling them to the towing vehicle.
- Replace worn or damaged hydraulic lines immediately.

2.3.3 Safe operation

- Ensure that you have read and understood this manual and all safety instructions before coupling, adjusting, operating, or performing maintenance on the BeddingCleaner.
- Only trained personnel may operate the BeddingCleaner.
- Connect the PTO shaft between the BeddingCleaner and the driving vehicle, ensuring that the PTO shaft guard is secured against rotation using the designated chains.
- Install all guards and safety features on the BeddingCleaner before putting the machine into operation.
- Keep hands, feet, hair, and clothing away from rotating parts.
- Keep unauthorised persons, especially small children, away from the BeddingCleaner at all times.
- Before use, check that the BeddingCleaner is free from defects or damage that could affect its operation.
- Contact your milking technology dealer if you have any further questions.
- All controls on the BeddingCleaner must be positioned to prevent unintentional or unexpected operation.
- Adjust the operating speed of the BeddingCleaner to suit the conditions within the FreeLivingBarn for safe and proper operation.
- Be aware of the surroundings when working with the BeddingCleaner. Take into account the length, weight, width, and turning radius of the machine.
- Be alert to the snapping movements of hydraulically driven components on the BeddingCleaner.
- Stop the BeddingCleaner and switch off the tractor before adjusting the BeddingCleaner.
- Do not wear loose clothing when operating the BeddingCleaner due to the risk of entanglement.
- Always wear appropriate personal protective equipment (PPE) when using the BeddingCleaner.
- Before use, check all bolt connections on the BeddingCleaner, especially those of rotating parts.
- Keep people and animals out of the working area of the BeddingCleaner during operation.

2.3.4 Safety during maintenance

- Ensure that you have read and understood this manual and all safety instructions before performing maintenance on the BeddingCleaner.
- Only trained personnel may perform maintenance on the BeddingCleaner.
- Disconnect the BeddingCleaner from the tractor before carrying out maintenance.
- Disconnect the PTO shaft from the driving vehicle before starting maintenance work.
- Ensure that hydraulic lines are depressurised before performing any work.
- Always wear appropriate personal protective equipment (PPE) during maintenance on the BeddingCleaner.
- After maintenance, check that all bolt connections are correctly tightened and secured.
- Ensure that the machine cannot move unexpectedly during maintenance work. Block the wheels.
- Removal of the sieve belts must only be performed by properly trained personnel.
- Reinstall all guards and safety covers after maintenance is completed.
- Replacement or removal of wheels and tyres must only be carried out by properly trained personnel.
- Be aware that rotating parts may continue to rotate due to inertia.

2.3.5 Safety and the environment

- Respect the environment.
- Prevent environmental damage. Do not dispose of oil, grease, or contaminated parts into the environment, sewers, or any place where harm could be caused.
- Always dispose of oil, grease, and contaminated parts at authorised recycling or waste disposal facilities.

2.3.6 Safety warnings

- This section contains general safety warnings. Specific safety warnings are included in the relevant parts of this manual, where potential hazards may occur if procedures or instructions are not followed.

Safety stickers

The user and installer are responsible for the safe operation and maintenance of the BeddingCleaner. To ensure safety around the BeddingCleaner, safety stickers are used. These stickers must be correctly applied and maintained. The diagram below shows where each sticker should be placed.



010-405-007 Warning Sticker
Read the manual before use.

Applying the stickers

- Ensure that the surface where the sticker will be applied is clean and dry.
- The surface temperature should be at least 5°C.
- Determine the correct position for the sticker.
- Remove a small section of the protective backing from the sticker.
- Place the sticker on the surface and apply a small part of the adhesive layer.
- Carefully remove the rest of the protective backing and apply the remainder of the sticker.
- If necessary, small air bubbles can be removed by pricking them with a needle and smoothing the sticker down with the backing film.

Maintaining the stickers

- Keep the safety stickers clean and legible.
- Clean the safety stickers with soap and water. Do not use solvents or abrasive materials, as these may damage the stickers.
- Immediately replace missing or unreadable safety stickers.

Safety stickers are available from Hanskamp. Always mention the relevant part numbers when making inquiries.

Location of the safety stickers on the BeddingCleaner. All safety stickers are provided on one sticker sheet (art. no. 010-423-000).

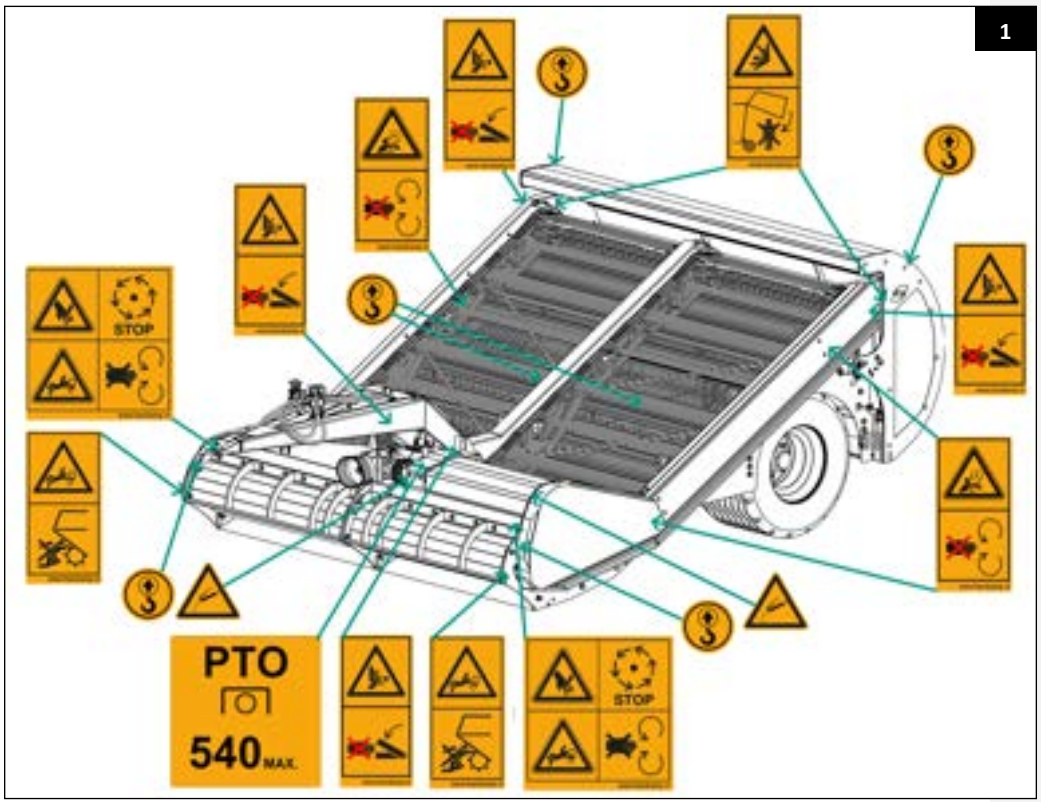

3. Machine Features

General description
The BeddingCleaner is towed and powered by a motorised vehicle, such as a tractor. The power transmission occurs via the PTO (Power Take-Off) of the motorised vehicle. Other functions, such as lifting the machine and emptying the collection bin, are operated through the vehicle's hydraulics.

Please read this instruction thoroughly and always adhere to the safety regulations. Refer to the appendix for part numbers and descriptions of the components.

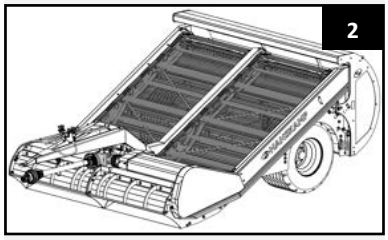
2

The BeddingCleaner contains the following components:

1x BeddingCleaner
1x PTO
2x Wheels complete

Transport and storage
The BeddingCleaner is delivered fully assembled. It is transported on a flatbed trailer or low-loader. The dimensions of the BeddingCleaner are shown in figure 4 (p. 10).

Caution!

- **Move the BeddingCleaner only with suitable transport equipment (forklift, tractor, etc.).**
- **Park the trailer or low-loader on a flat surface and ensure that it cannot roll away unexpectedly.**
- **Straps, chains, or similar fastenings must only be released once the trailer or low-loader is stable.**
- **Ensure an experienced operator loads or unloads the machine from the trailer carefully.**
- **Keep people at a safe distance during loading or unloading.**
- **Avoid making sudden movements when loading or unloading the BeddingCleaner.**

Type plate of the BeddingCleaner
The type plate of the BeddingCleaner is located at the rear of the drawbar. See figure 3.

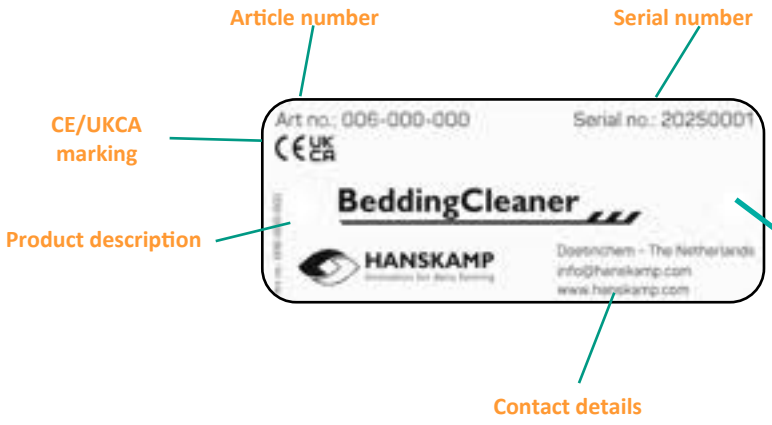

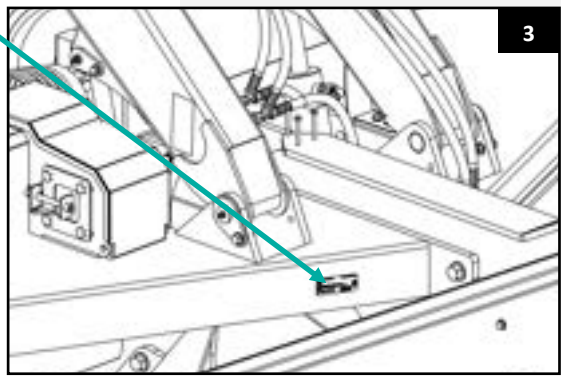
3

Technical specifications

Features	Specification
Coupling point	Upper drawbar
Working width	3.00 m
Max. PTO speed	540 min^{-1}
PTO working speed	400 min^{-1}
Max. hydraulic working pressure	150 bar
Height	1.72 m
Width	3.02 m
Length	4.99 m
Weight	2,861 kg
Required power	53 kW (75 hp)
Collection bin capacity	1.4 m^3
Wheels	Tire: 500/50R17, Rim: 16x17
Tyre pressure	0.5 bar

Dimensions of the BeddingCleaner

Figure 4 shows the length, width, and height dimensions of the BeddingCleaner. Figure 5 shows the locations of the lifting points and lifting provisions of the BeddingCleaner.

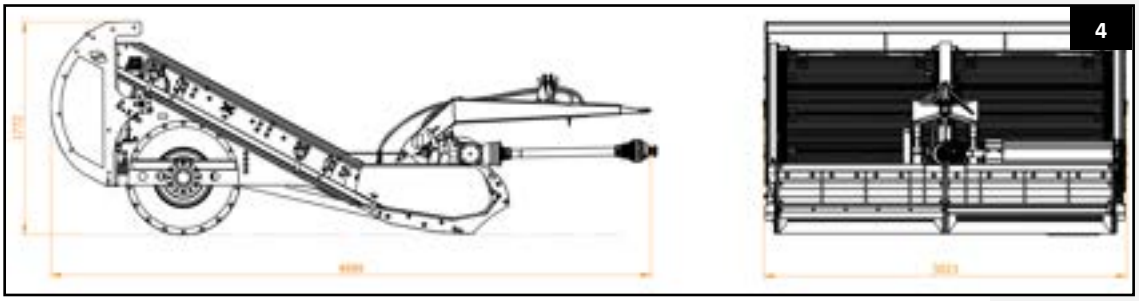

4

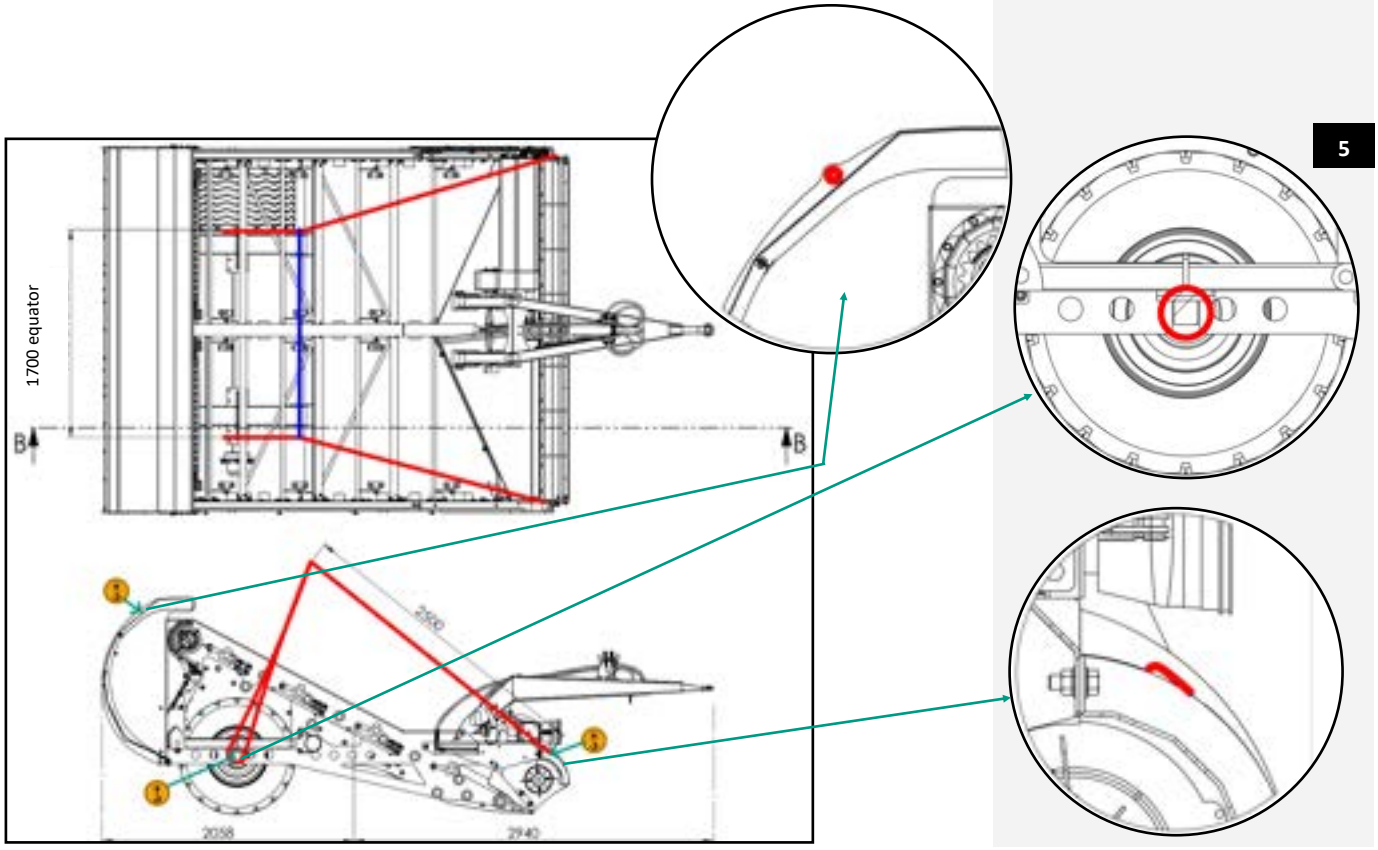

5

3.1 Parts List

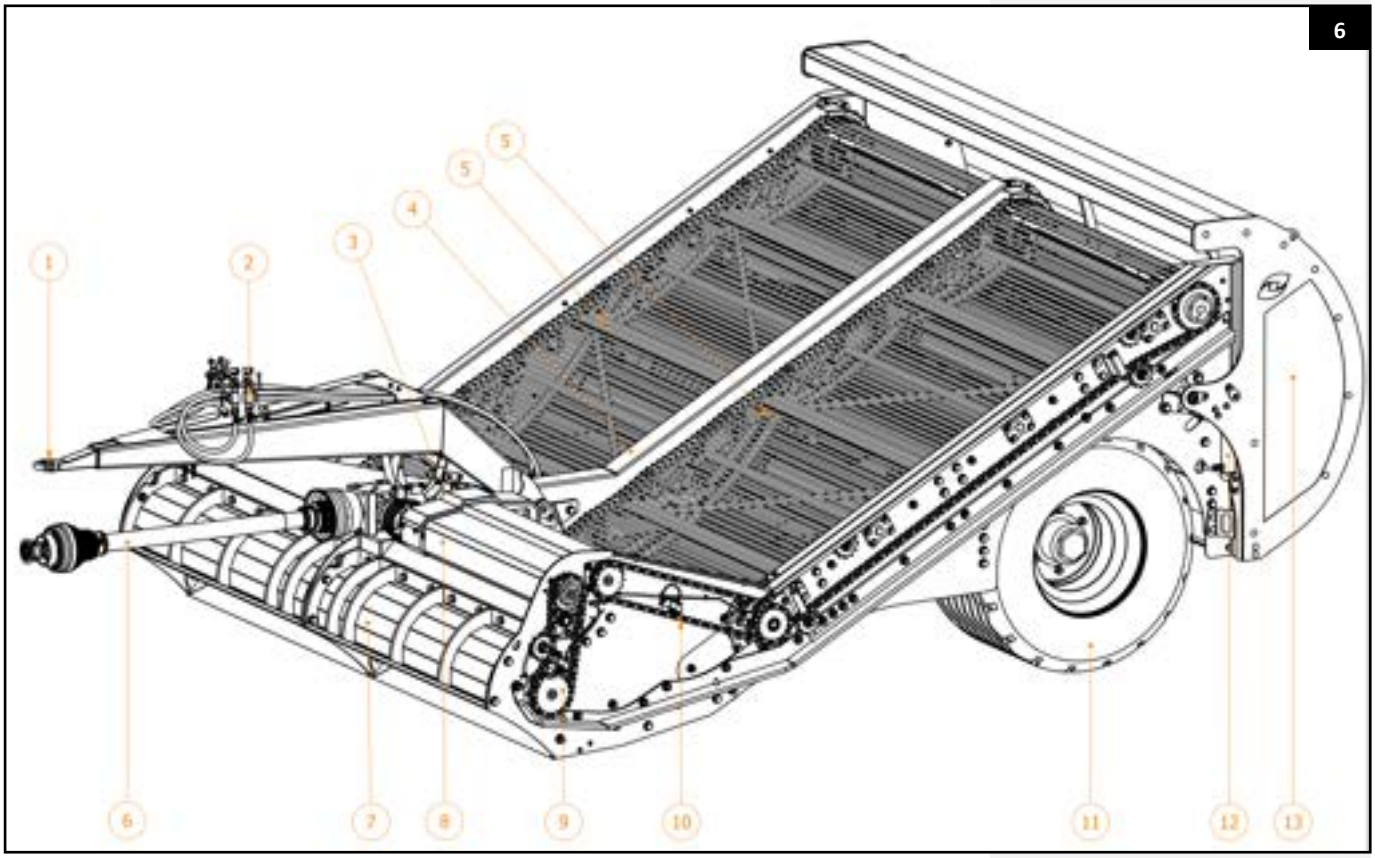

No.	Description	Appendix Drawing
1	Drawbar	-
2	Hydraulic connections	• Hydraulic parts and location
3	Hydraulic tilt cylinder	• Hydraulic parts and location
4	BeddingCleaner frame	-
5	Sieve belt	• Sieve belt closure set • Sieve belt spare splice
6	PTO	• Main drive to slip clutch box
7	Infeed roller	• Infeed roller parts and location
8	Intermediate box with slip clutch	• Reverse gearbox parts and location • Reverse gearbox cover plates
9	Drive chain for infeed roller	• Infeed roller drive chain
10	Drive chain for sieve belt	• Sieve belt drive chain
11	Wheel	-
12	Hydraulic tilt cylinder	• Hydraulic parts and location
13	Collection bin	• Valve parts and location

4. Commissioning and Operating Instructions

4.1 Coupling and Uncoupling the Machine

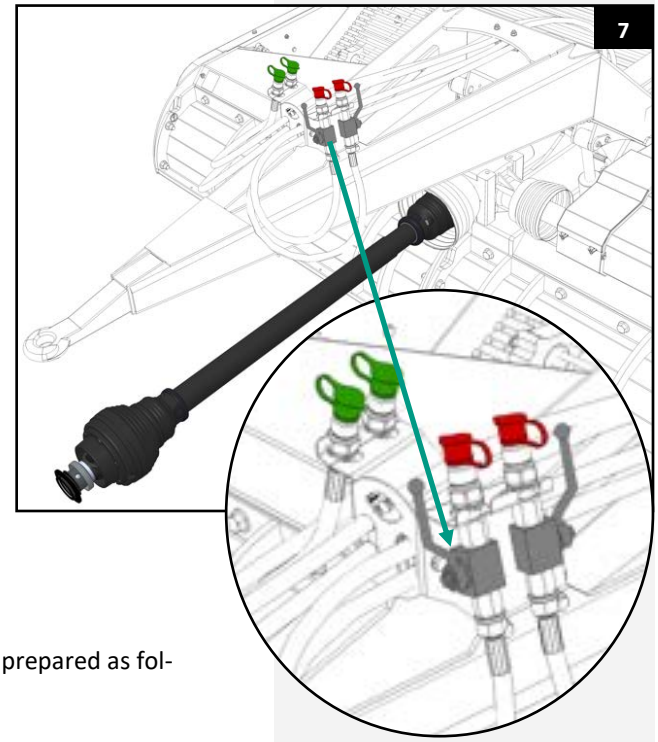
7

4.1.1 BeddingCleaner controls

The BeddingCleaner is operated via the following components:

- Two hydraulic hoses (shown in red) for operating the drawbar of the BeddingCleaner.
- Two hydraulic hoses (shown in green) for operating the collection bin of the BeddingCleaner.
- One PTO shaft for driving the BeddingCleaner.

Caution! The hydraulic hoses for operating the drawbar are equipped with hydraulic valves. When these valves are positioned 90° relative to the hose, the hydraulic flow to the cylinders is blocked. This prevents the drawbar from falling when the machine is uncoupled.

4.1.2 Preparing the tractor

For proper operation of the BeddingCleaner, the tractor must be prepared as follows:

Coupling Point

- The BeddingCleaner uses the upper drawbar of the tractor.
- The height of the drawbar must be adjusted to 1,100 mm from the ground.

PTO Drive

- The tractor must be equipped with a hexagonal PTO shaft.
- The nominal PTO speed of the tractor is 540 min^{-1}.

Hydraulic Facilities

- One double-acting valve for operating the drawbar of the BeddingCleaner.
- One single/double-acting valve for operating the collection bin of the BeddingCleaner.

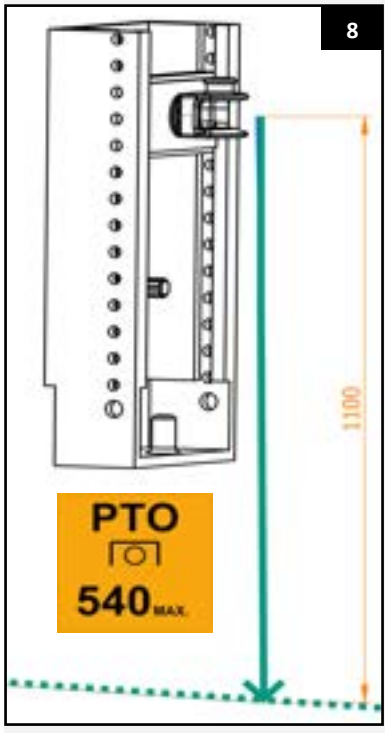

4.1.3 Coupling to the tractor

Caution! Always ensure that the BeddingCleaner cannot unexpectedly roll or move during coupling. Block the wheels before starting to prevent rolling.

Caution! Check the surroundings around the BeddingCleaner and ensure that it is clear of people and animals before beginning the coupling process.

1. Position the tractor in front of the BeddingCleaner.
2. Check that the drawbar of the BeddingCleaner is at the correct height relative to the drawbar hitch (1,100 mm from the ground). If the drawbar of the BeddingCleaner is not at the correct height relative to the drawbar hitch, follow the steps below:
   2.1. Connect the red hydraulic hoses to a double-acting valve on the tractor.

Caution! Do not open the hydraulic valves when you are under or on the draw-bar. Open the hydraulic valves only when the hydraulic hoses are connected to the tractor.

2.2. Turn both hydraulic valves in the direction of the hose. The valves are now open, and hydraulic fluid can flow to the cylinders.
2.3. Operate the hydraulic valve on the tractor. Adjust the drawbar until it reaches the correct height for coupling (1,100 mm from the ground).

3. Couple the BeddingCleaner to the tractor.
4. Connect the green hydraulic hoses for the collection bin to a single- or double-acting valve on the tractor.
5. Connect the PTO shaft to the tractor.
6. Lift the BeddingCleaner to transport position by operating the hydraulic valve on the drawbar.

4.1.4 The PTO shaft

The BeddingCleaner is equipped with a standard wide-angle PTO shaft. This PTO shaft can be used at an angle of up to 25° as standard. For short periods, this angle can be increased to a **maximum of 80°**. The wide-angle side of the PTO shaft is located at the tractor side.

9

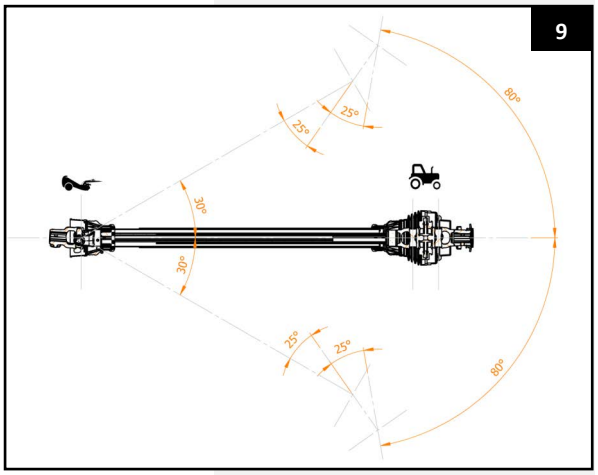

Caution! Always attach the chain to prevent the PTO shaft guard from rotating, both on the machine and on the tractor. The chain must be attached to the red shaded area in the figure.

Caution! If a guard or chain is damaged, it must be replaced immediately to prevent accidents.

Caution! It may be necessary to shorten the PTO shaft before use to prevent damage to the PTO shaft.

10

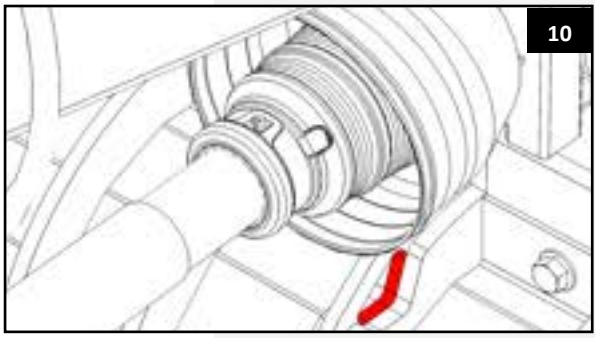

4.1.5 Shortening the PTO shaft

It may happen that the PTO shaft is not a standard fit between the machine and the tractor. In that case, the PTO shaft needs to be shortened. The following steps describe how to do this:

1. Slide the two parts of the PTO shaft apart.
2. Attach one part to the PTO stub of the machine and the other part to the PTO stub of the tractor.
3. Keep both ends side by side in the shortest possible assembly position and check how much the shafts overlap.

Caution! Ensure that the machine and tractor are correctly positioned to achieve the maximum overlap of the PTO (drive shaft).

Caution! After shortening the PTO shafts, the minimum overlap must be 25 cm.

4. Measure the excess length of the PTO shaft and add 3 cm (highlighted in orange in the figure).
5. Shorten both the protective covers and the inner and outer tubes to the same length.
6. The protective cover of the inner tube may be shortened further (highlighted in red) to facilitate assembly of the PTO shaft.
7. Remove any sharp edges from the tubes and lubricate the inner side of the outer tube with oil or grease.
8. Slide the inner and outer tubes back together, ensuring that the PTO shaft is correctly reassembled.

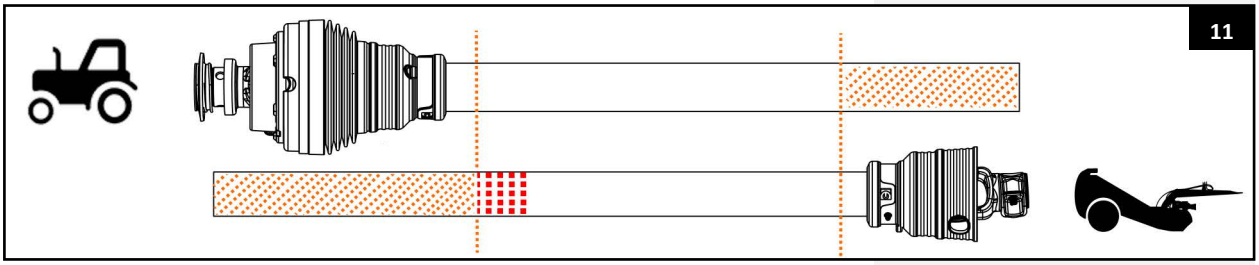
11

4.1.6 Uncoupling the machine

Uncoupling the BeddingCleaner is done in the reverse order of coupling the BeddingCleaner. Follow the steps below:

1. Park the BeddingCleaner on a level surface and ensure that the machine cannot roll away.
2. Lower the front of the machine to the ground using the drawbar adjustment.
3. Disconnect the PTO shaft from the tractor.
4. Turn the hydraulic valves on the hydraulic hoses to the closed position. In the closed position, the lever is at a 90° angle to the hoses.
5. Depressurise the hydraulic drawbar using the controls in the tractor.
6. Disconnect the hydraulic hoses from both the drawbar and the collection bin.
7. Uncouple the machine from the tractor.

4.2 Adjusting the BeddingCleaner

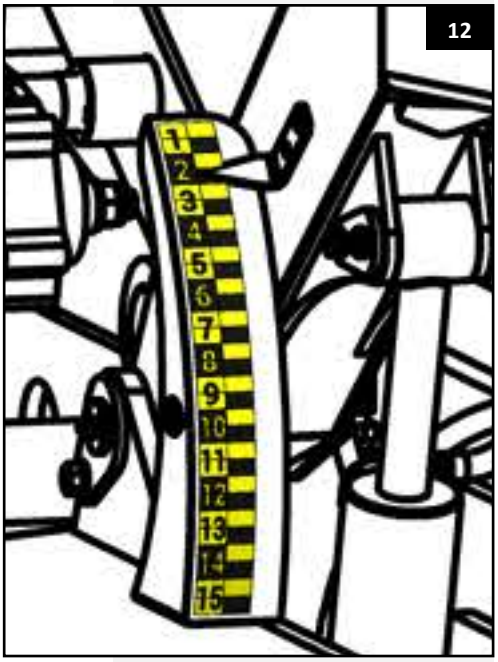

12

4.2.1 Adjusting the working depth

The working depth of the BeddingCleaner is easily adjusted by adjusting the drawbar. Operate the tractor's double-acting valve to raise or lower the drawbar. This will lift or lower the BeddingCleaner. A height indicator is located on the right front side of the drawbar, where the working depth can be easily read.

The indicator alternates between yellow and black numbered sections, which are divided into half sections. One full section corresponds to 85 mm of movement. One half section corresponds to 42.5 mm of movement.

When the height indicator is set to position 1 (lowest position), the maximum working depth is achieved. At position 15 (highest position), the BeddingCleaner is in its maximum transport position.

4.2.2 Adjusting the shaker rolls

The shaking intensity of the shaker rollers affects the sieving result. The intensity can be set in four different positions and has three modes:

- No shaking.
- Light shaking.
- Aggressive shaking.

To adjust the shaker rollers easily, a tool is located on the inside of the drawbar. This tool is secured with two retaining springs.

Caution! Ensure that the BeddingCleaner is switched off before adjusting the shaker rollers.

The shaking intensity can be set in four different positions.

1. Slide the tool over the lever of the shaker roller adjustment.
2. Keep the tool under tension so that the locking pin is released.
3. Pull out the locking pin.
4. Move the lever to the left or right to change the shaking intensity of the shaker rollers.
5. Allow the locking pin to click back into place to secure the new position.

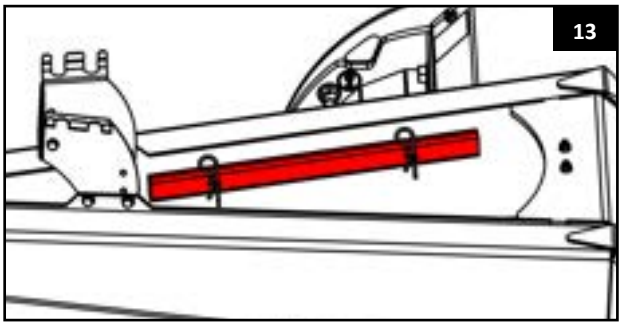
13

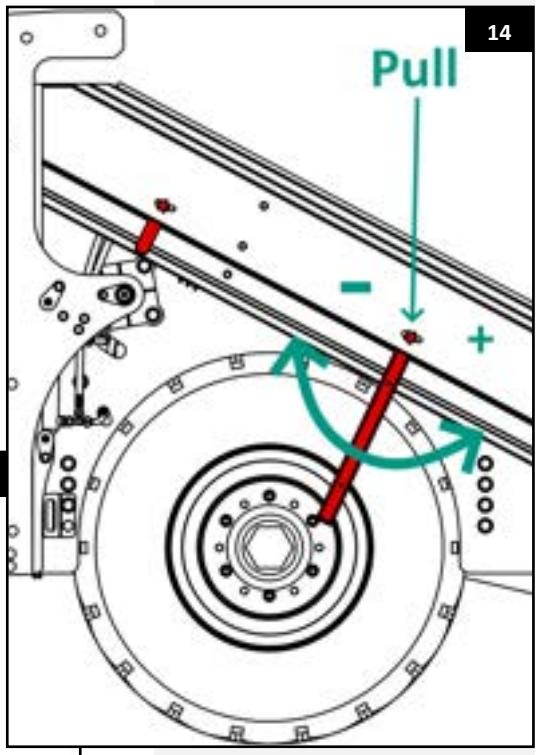

14

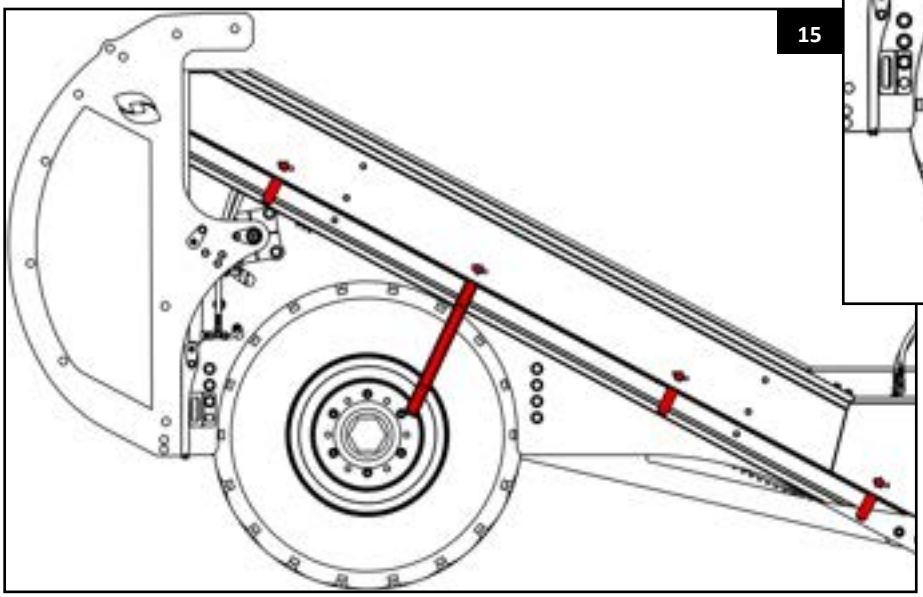
15

4.2.3 Tyre pressure BeddingCleaner

The BeddingCleaner is used in FreeLivingBarns, which are equipped with a coarse, loose sand bedding or organic material. To ensure the BeddingCleaner moves smoothly through loose materials, it is important that the tyre pressure is set correctly. The recommended tyre pressure is 0.5 bar. This ensures that the wheels provide sufficient traction in loose materials.

Caution! Only check the tyre pressure when the BeddingCleaner is switched off and parked securely in a stable position.

Caution! Regularly check the condition of the BeddingCleaner's wheels. Wheels showing visible damage must be replaced immediately to prevent injury or danger to the user.

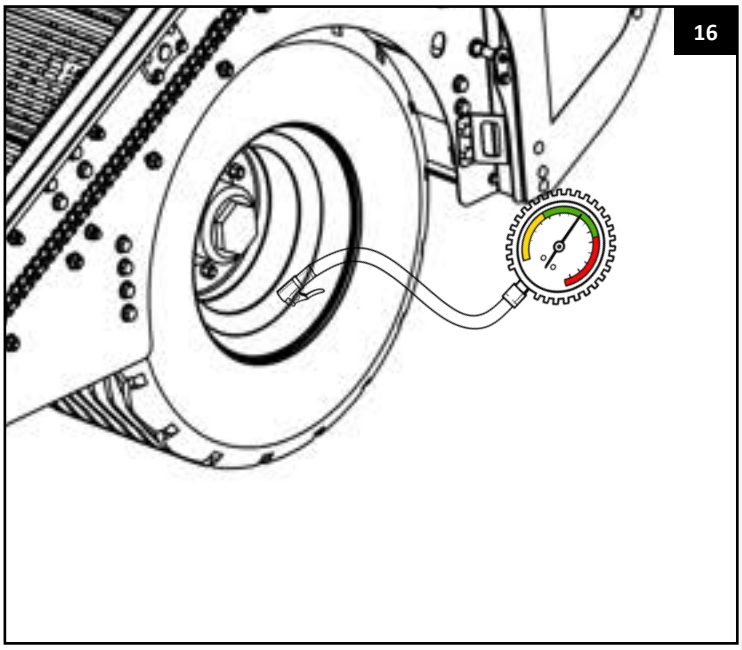

16

4.3 Maintenance of the BeddingCleaner

4.3.1 Lubrication of the BeddingCleaner

Various components of the BeddingCleaner must be lubricated regularly. The table below shows the recommended lubrication intervals and the location of the lubrication points for each component. The lubrication points on the machine are also marked with stickers, making them easy to identify during maintenance. Examples of these markings are shown in Figures 17 and 18.

Component	Lubrication Points	Lubrication Interval	Remarks	Figure
Drive shaft (PTO)	4 grease nipples	Every 8 operating hours	Grease telescopic tubes every 250 operating hours	24
Collection hopper	6 lubrication points	Every 50 operating hours or monthly	Hinge points and hydraulic cylinder lubrication points	21
Drawbar	6 lubrication points	Every 50 operating hours or monthly	Hinge points and hydraulic cylinder lubrication points	20
Reversing gearbox	7 bearing lubrication points	Every 50 operating hours or monthly	Ensure that bearings are properly lubricated	23
Infeed roller	2 bearing lubrication points	Every 50 operating hours or monthly	Lower drive of the infeed roller	19
Sieve belt drive	3 bearing lubrication points	Every 50 operating hours or monthly	Lower drive of the sieve belt	22

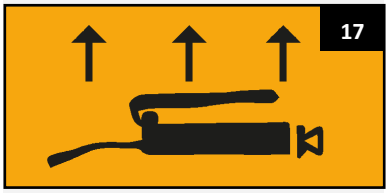



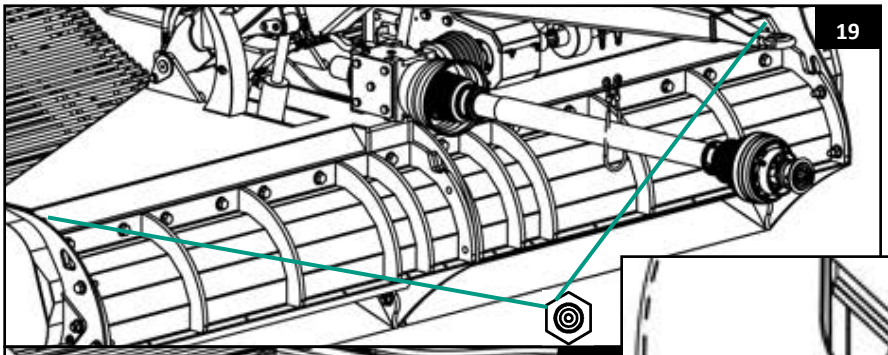

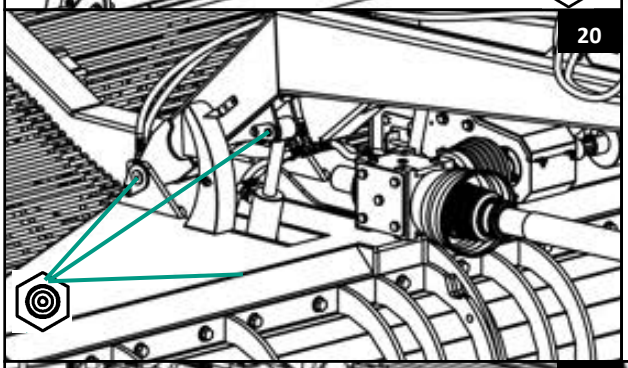

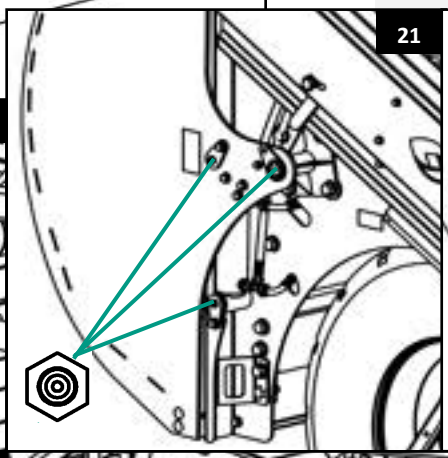

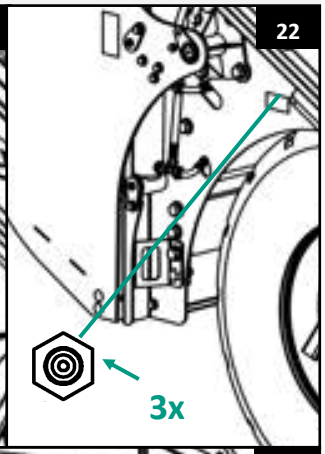

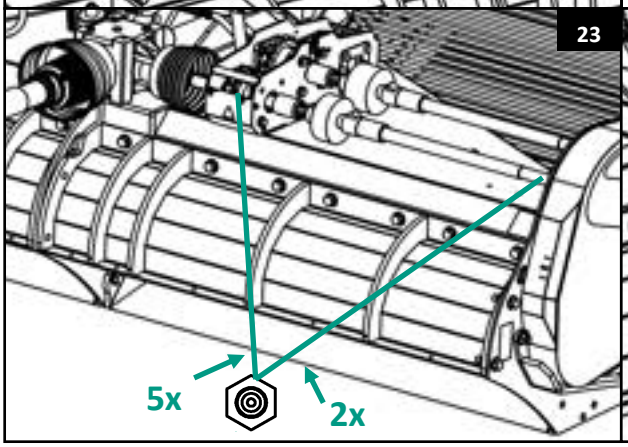

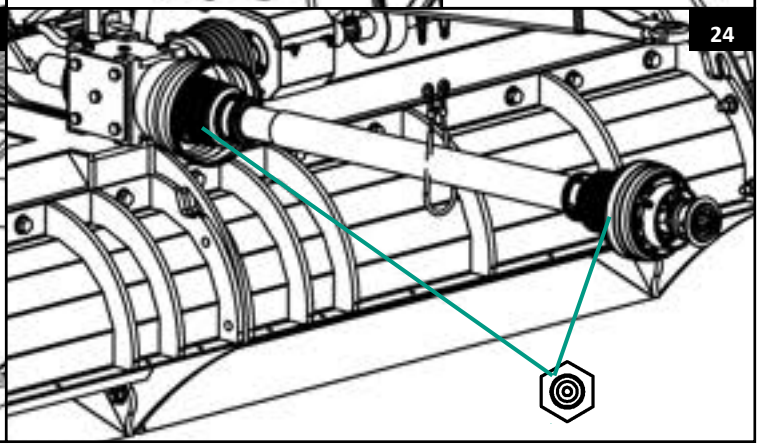

Component	Lubrication Interval	Lubricant	Remarks
Gearbox	Every 500-700 operating hours, at least once per year	SAE 80W-90 or equivalent	Check the oil level before use. Replace the oil in case of contamination or leakage.

Chain drives

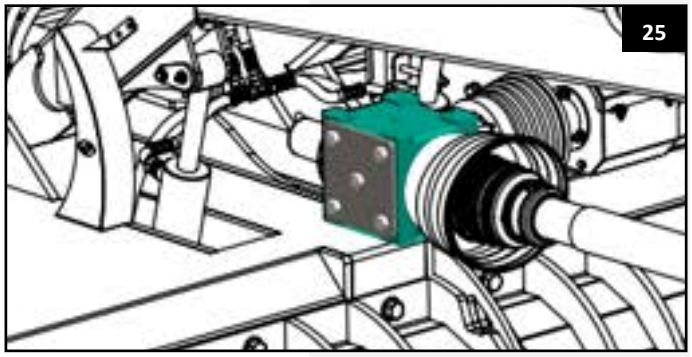
25

- The BeddingCleaner is equipped with multiple chain drives that are continuously lubricated by 4 Perma Classic lubrication units (006-064-000).
- Each Perma Classic lubrication unit is fitted with a grey activation screw (006-070-000). This screw ensures that the Perma lubrication unit can lubricate the drive chains for 12 months.
- The Perma Classic lubrication units are connected to Perma lubrication brushes. These brushes distribute the oil evenly over the chains and various components.
- Replace each Perma Classic lubrication unit, including the grey activation screw, every 12 months.
- Replace worn or damaged lubrication brushes to ensure proper functioning of the lubrication system.

Wheel bearings

- When replacing wheel bearings, it is important to pre-grease the bearings adequately before installation.
- Fill the wheel hub housing during assembly with a high-quality EP2 grease or equivalent.

Caution! Always switch off the BeddingCleaner and disconnect it from the power source before carrying out maintenance work.

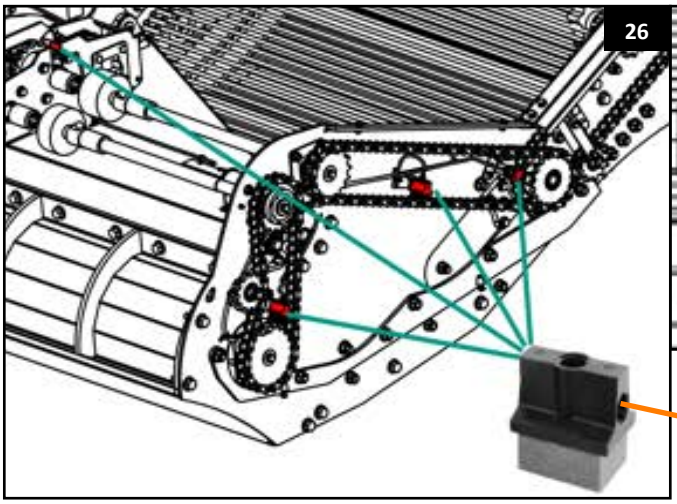
26

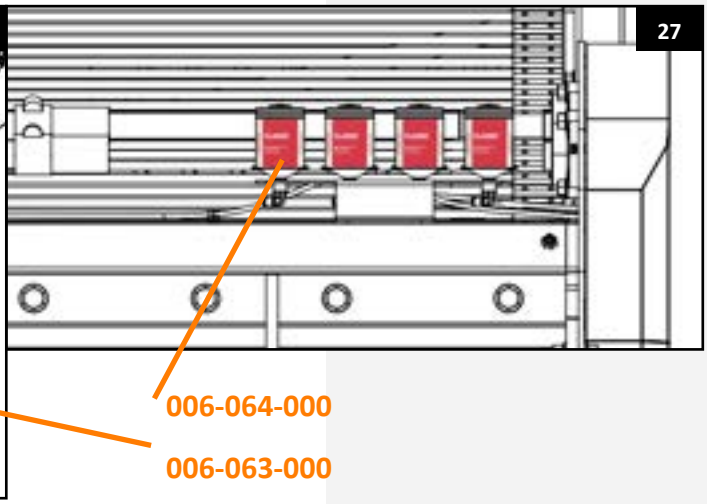

27

4.3.2 Roller chain maintenance

The BeddingCleaner is equipped with a roller chain drive system. The machine is driven via the tractor PTO shaft. This PTO shaft is connected to a right-angle gearbox, which transmits the power to the reversing gearbox. From the reversing gearbox, the power is split:

- One shaft for the infeed roller.
- One shaft for the sieve belt.

Both shafts are individually protected against overload. From the reversing gearbox, the various functions of the BeddingCleaner are driven via roller chains.

Caution! Before carrying out any work on the drive system of the Bedding-Cleaner, the machine must be fully disconnected from the driving source. Ensure that the BeddingCleaner is positioned in a stable and safe manner so that it can-not move unexpectedly. Maintenance work on the drive system may only be carried out when the machine is safely stationary.

To prevent excessive and premature wear, the BeddingCleaner is equipped with an auto-matic lubrication system for the roller chains. This system ensures that the roller chains are continuously lubricated for 12 months. After 12 months, the Perma Classic lubrication unit must be replaced to ensure correct operation of the lubrication system.

Caution! If visible damage or defects are found on the roller chains, they must be replaced immediately to prevent accidents. Failure to replace a worn chain in time may result in excessive wear of sprockets and other drive train compo-nents.

Inspect the roller chains and sprockets every six months for wear and defects. Replace the roller chain when it has elongated by a maximum of 2% compared to a new chain.

Replace the sprockets when one or more of the following conditions occur:

- Pointed sprocket teeth.
- Excessive wear on the sprocket tooth profiles.
- Cracking or grinding noises during operation of the BeddingCleaner.

A newly installed chain must fit tightly around the sprockets. There must be no excessive clearance between the chain and the sprocket (fig. 28).

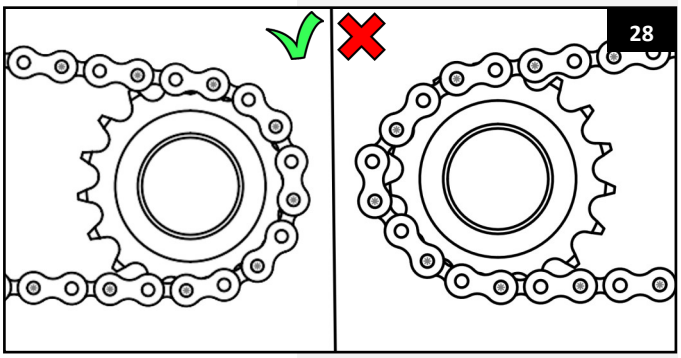

28

4.3.3 Chain tension

The BeddingCleaner is equipped with 4 chain drives:

- Transmission chain in the reversing gearbox (see appendix: Reversing gearbox).
- Chain of the infeed roller (see appendix: Infeed roller chain drive).
- Intermediate chain of the sieve belt.
- End chain of the sieve belt (see appendix: Sieve belt chain drive).

The infeed roller chain and the reversing gearbox chain are tensioned. The infeed roller chain is automatically kept under tension by a chain tensioner. The transmission chain of the reversing gearbox and the intermediate sieve belt chain must be tensioned manually. The end chain of the sieve belt is kept under tension by its own weight.

Caution! Before carrying out any work on the drive system of the Bedding-Cleaner, the machine must be disconnected from the driving vehicle. Ensure that the BeddingCleaner is in a stable position so that it cannot move unexpectedly.

The reversing gearbox chain and the intermediate sieve belt chain must be tensioned according to the figure below. $X_{horizontal}$ or $X_{vertical}$ represents the maximum deflection of the chain at the midpoint between two sprockets.

1. Measure the shortest centre-to-centre distance between the two sprockets.
2. Multiply the measured value (**X**) by 0.04 for semi-horizontal drives. Multiply the measured value (**X**) by 0.02 for vertical drives.
3. The resulting value X_h or X_v is the deflection in the middle between the two sprockets.

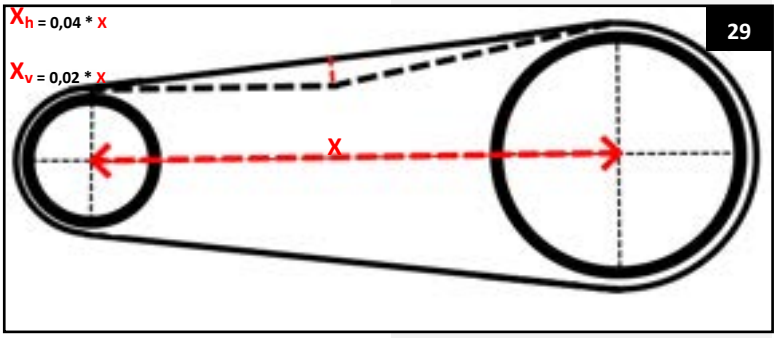

29

For the BeddingCleaner, the following values apply:

- Reversing gearbox chain X_h= 13.6 mm
- Intermediate sieve belt chain X_h= 19.5 mm

4.3.4 PTO shaft slip clutches

The various functions of the BeddingCleaner are protected against overload by slip clutches. The sieve belt drive is protected up to 800 Nm (006-075-000), and the infeed roller drive is protected up to 400 Nm (006-074-000).

Note: Be aware that slip clutches are subject to wear when they are triggered frequently. It is therefore important to minimise clutch engagement as much as possible to prevent premature wear.

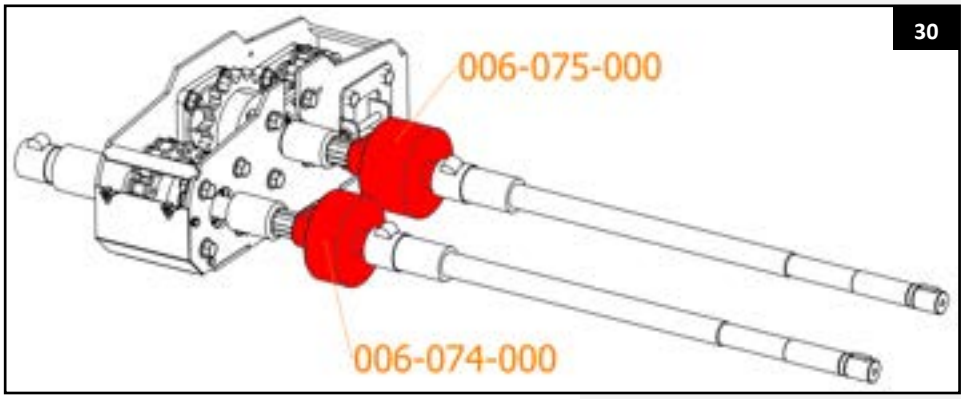

30

Warranty limitations

The following costs and expenses are excluded from the warranty:

- Improper use of the equipment that is not in accordance with the specifications in the installation and operating manual.
- Consequences of intervention by technicians who are not approved by Hanskamp to perform certain actions.
- Incidents such as freezing, ice, fire, flooding, inundation, or any other form of extreme water damage, as well as lightning strikes.

The warranty does not cover consequential damage that is not directly related to the machine itself. All systems are tested. In the event of a malfunction, Hanskamp cannot be held responsible for consequential damage.

Overview of changes included in this installation and operating manual

No.	Release date	Chapter(s)	Remarks
1	08/2024	All	First edition
1.1	12/2025	Pages 1 + 35	Page 1: Change of location name. Page 35: Hanskamp address update.
1.2	05/2026		Translation in English

Copyright and Disclaimer

The information in this publication is provided for informational purposes only and should not be considered a sales offer. Products offered may differ from the images shown. References to brands and/or products in this manual are for identification purposes only. The company and product names mentioned in this manual are trademarks of their respective owners. Nothing in this publication may be reproduced or made public without the prior written permission of Hanskamp AgroTech BV. Although this publication has been prepared with the greatest possible care, Hanskamp AgroTech BV is not liable for any damage that may result from errors or omissions in this publication. The Dutch-language installation and operating manual is the original installation and operating manual. Translations into other languages are based on the Dutch installation and operating manual as the source document. Hanskamp AgroTech BV accepts no liability for discrepancies between translations. In case of any doubt regarding the content or accuracy of the translated installation and operating manual, the Dutch manual shall be the authoritative document.

Declaration of Incorporation – Completed Machines IIA

According to Annex VIIA of the Machinery Directive 2006/42/EC, for completed machines

We,
Hanskamp AgroTech BV
Xenonstraat 6
7031 HX Wehl
The Netherlands

Authorized compilers of the technical file:

H.J. Hanskamp,

Hereby declare under our sole responsibility that the product:

006-000-000 BeddingCleaner
Cleaning machine for FreeLivingBarns, by Hanskamp AgroTech BV,

to which this declaration relates, is in conformity with the provisions of the following directive(s):

- Machinery Directive 2006/42/EC

The product also complies with the provisions of the following standard(s):

- NEN-EN-ISO 12100
- NEN-EN-IEC 13849-1

If the BeddingCleaner is not used in accordance with the instructions in this manual, this Declaration of Conformity shall become void, and no rights may be derived from this declaration.

Netherlands, Wehl, 14-1-2026 H.J. Hanskamp



Appendices

Spare parts
For maintenance or any other reason, it is possible to order spare parts through your supplier. Always use the part numbers as indicated on the relevant drawing(s) in this manual.

Overview image of the drive train components of the BeddingCleaner

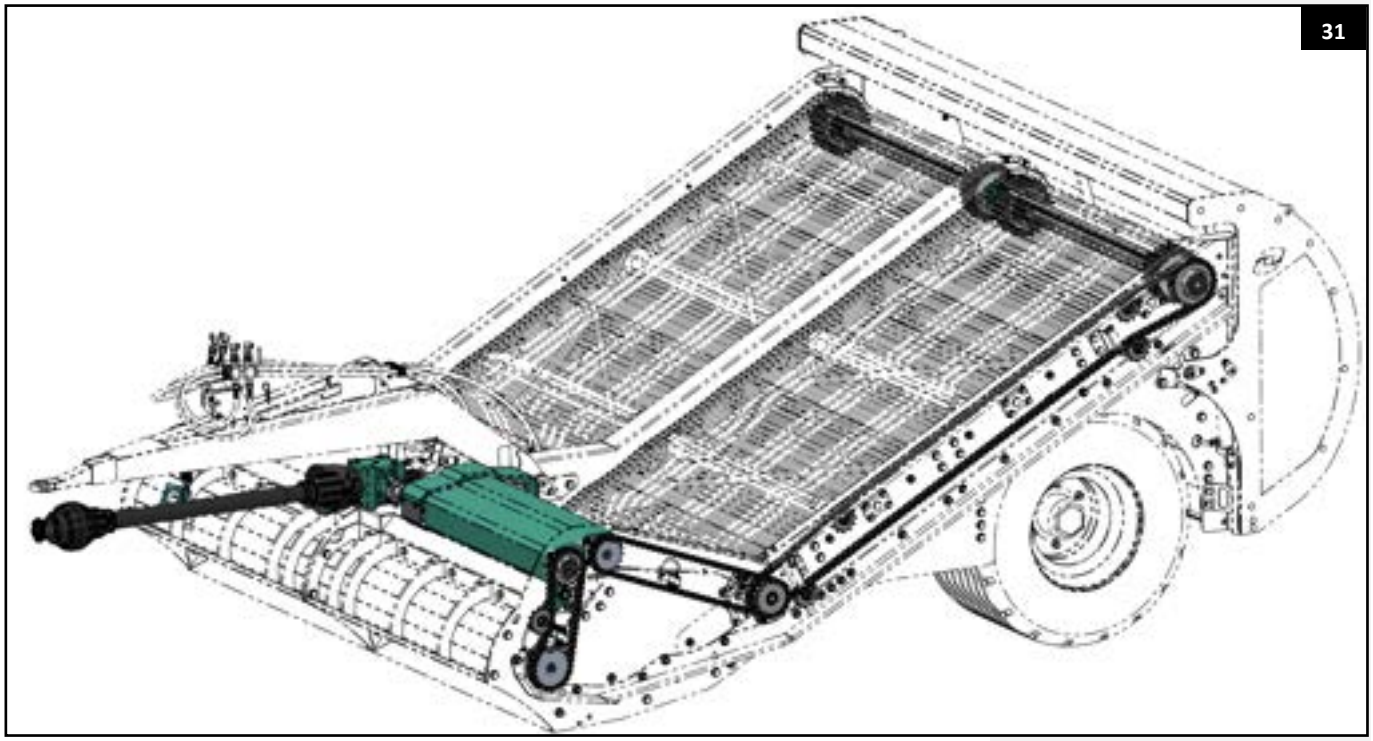

Sieve belt drive shaft

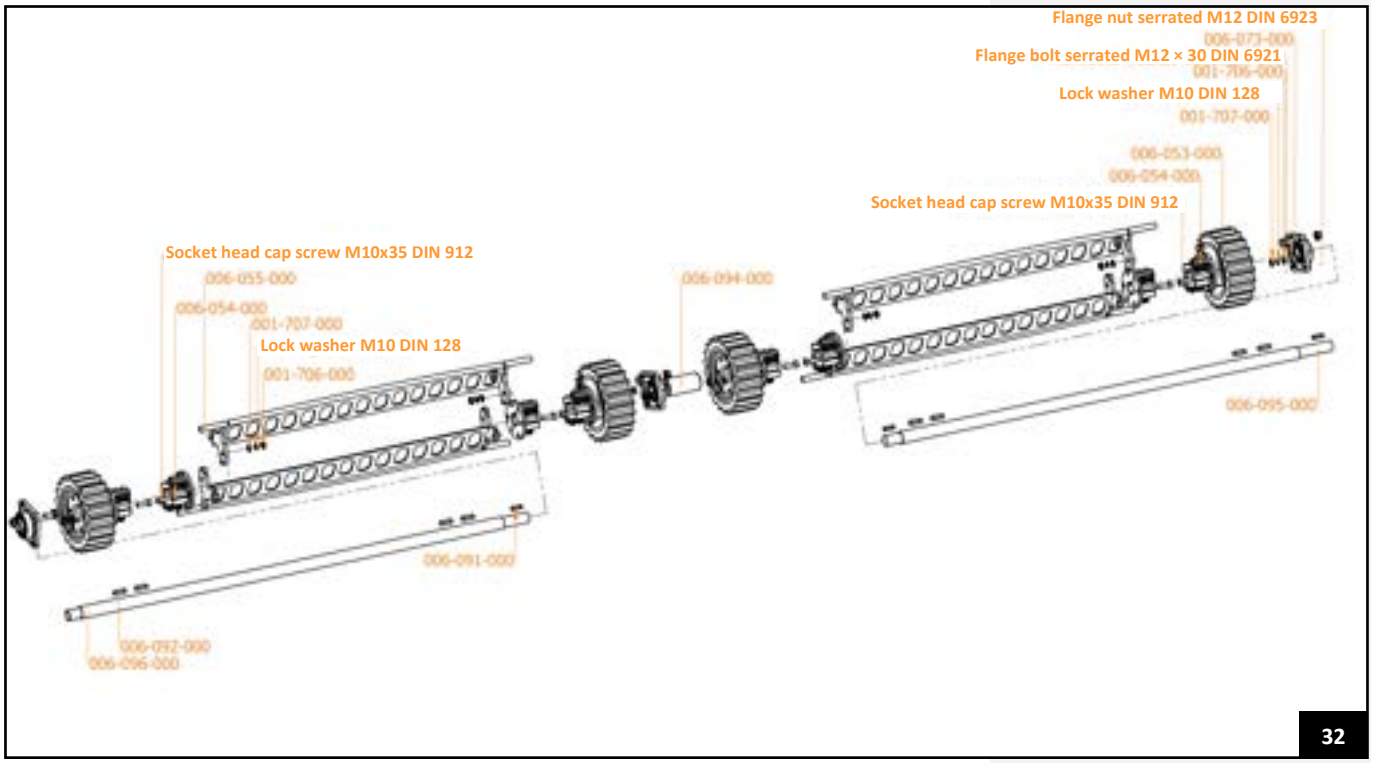

Art. no.	Description	Quantity
006-055-000	Punch	4
006-091-000	Parallel key 8x7x35	3
006-092-000	Parallel key 10x8x40	8
	Lock washer M10 DIN 128	32
001-706-000	Hex nut M10 DIN 934	32
	Socket head cap screw M10x35 DIN 912	32
001-707-000	Washer M10 DIN 125A	32
	Flange nut, serrated M12 DIN 6923	12
	Flange bolt, serrated M12×30 DIN 6921	12
006-094-000	Profile bushing Ø30	1
006-053-000	Drive wheel mat	4
006-054-000	Hub Ø35	8
006-095-000	Drive shaft Ø35	1
006-096-000	Drive shaft left	1
006-073-000	Flange bearing	3

Sieve belt chain drive

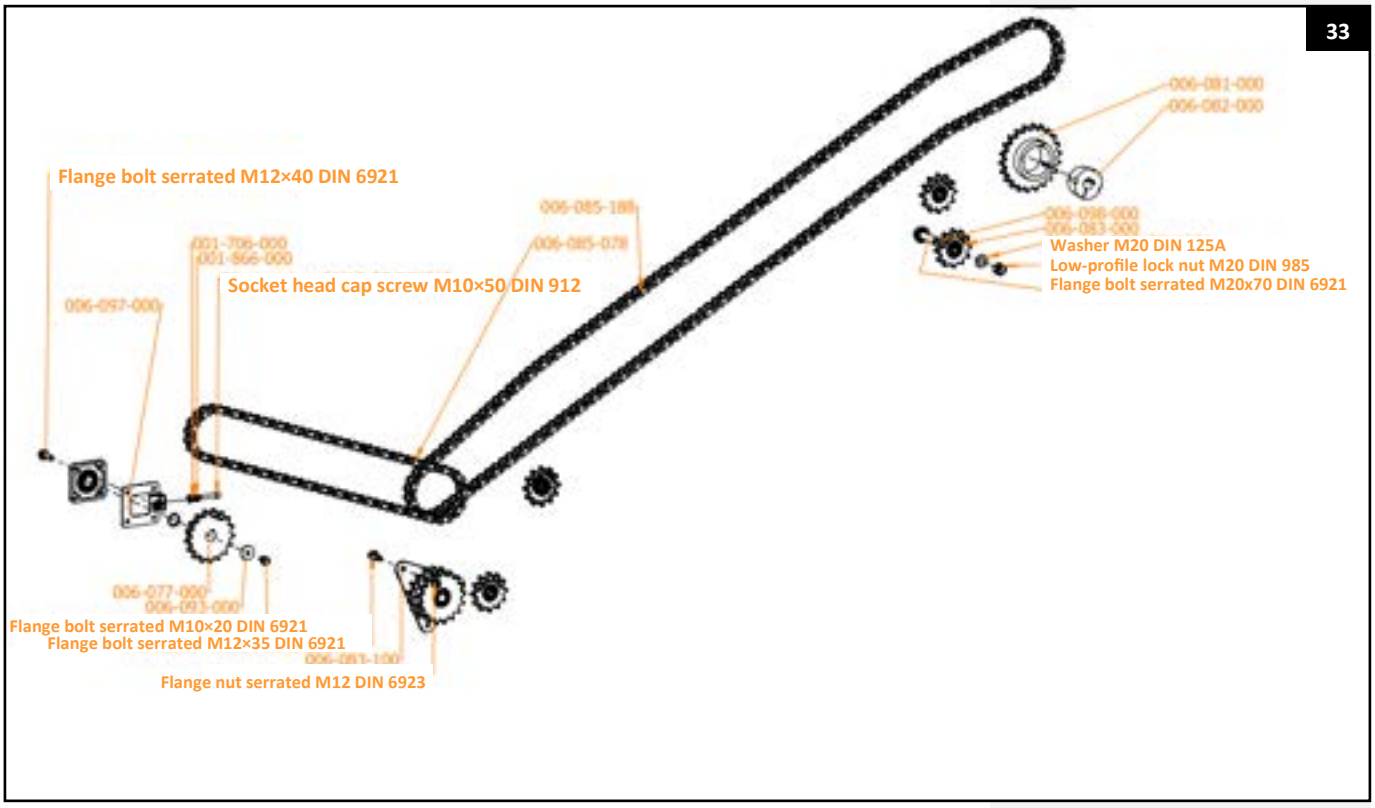

Art. no.	Description	Quantity
	Flange nut, serrated M12 DIN 6923	7
006-073-000	Flange bearing	1
001-706-000	Hexagon nut M10 DIN 934	1
	Flange bolt, serrated M10×20 DIN 6921	1
001-866-000	Low-profile lock nut M10 DIN 985	1
	Socket head cap screw M10×50 DIN 912	1
	Flange bolt, serrated M12×40 DIN 6921	4
	Flange bolt, serrated M12×35 DIN 6921	3
006-093-000	Closing plate	1
	Washer M20 DIN 125A	4
	Low-profile lock nut M20 DIN 985	4
	Flange bolt, serrated M20x70 DIN 6921	4

Art. no.	Description	Quantity
006-085-078	Intermediate chain 16B	1
006-085-188	Long chain 16B	1
006-083-000	Freewheel sprocket 16B-1, 12-tooth	4
006-083-100	Freewheel sprocket 16B-2, flange plate assembly	1
006-081-000	16B-1 sprocket, 22-tooth	1
006-082-000	Tapered bushing 2517 for 30 mm shaft	1
006-103-000	Circlip 30x1.5	1
006-097-000	Tensioner plate bearing	1
006-077-000	Sprocket 16B, 17-tooth with 30 mm bore	1
006-098-000	Freewheel sprocket 32-20 mm, spacing 25.5 mm	4

Freewheel sprocket with flange

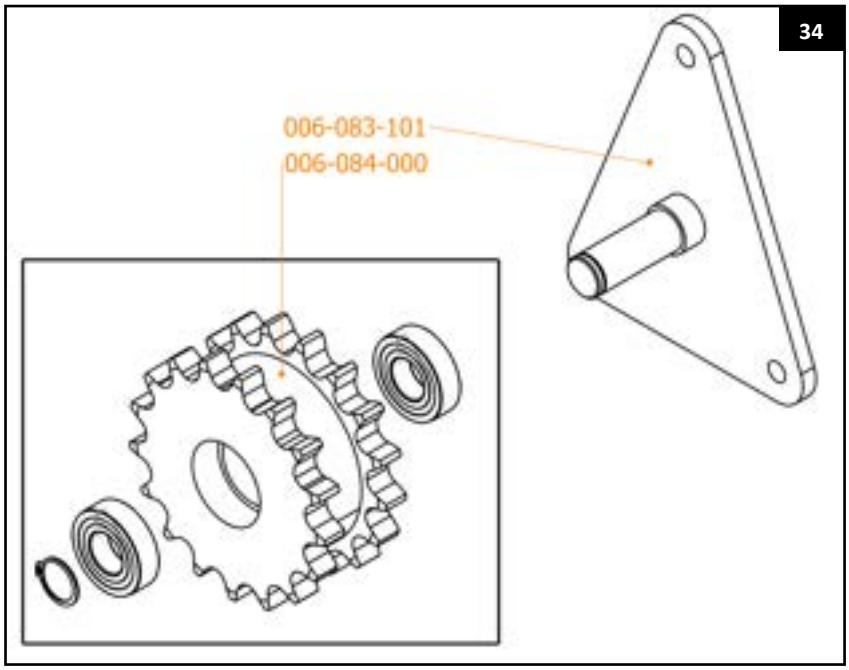

Art. no.	Description	Quantity
006-083-101	Flange plate welded assembly	1
006-084-000	Freewheel sprocket 16B-2, 17-tooth set	1

Freewheel sprocket

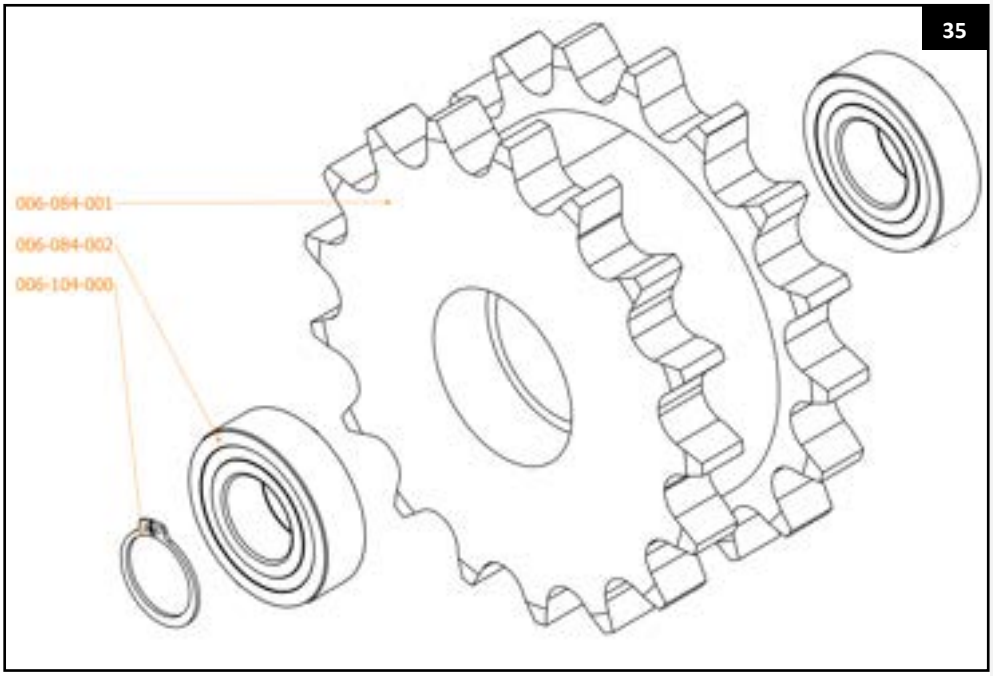

Art. no.	Description	Quantity
006-084-001	Freewheel sprocket 16B-2, 17-tooth	1
006-084-002	Bearing	2
006-104-000	Circlip	1

Infeed roller chain drive

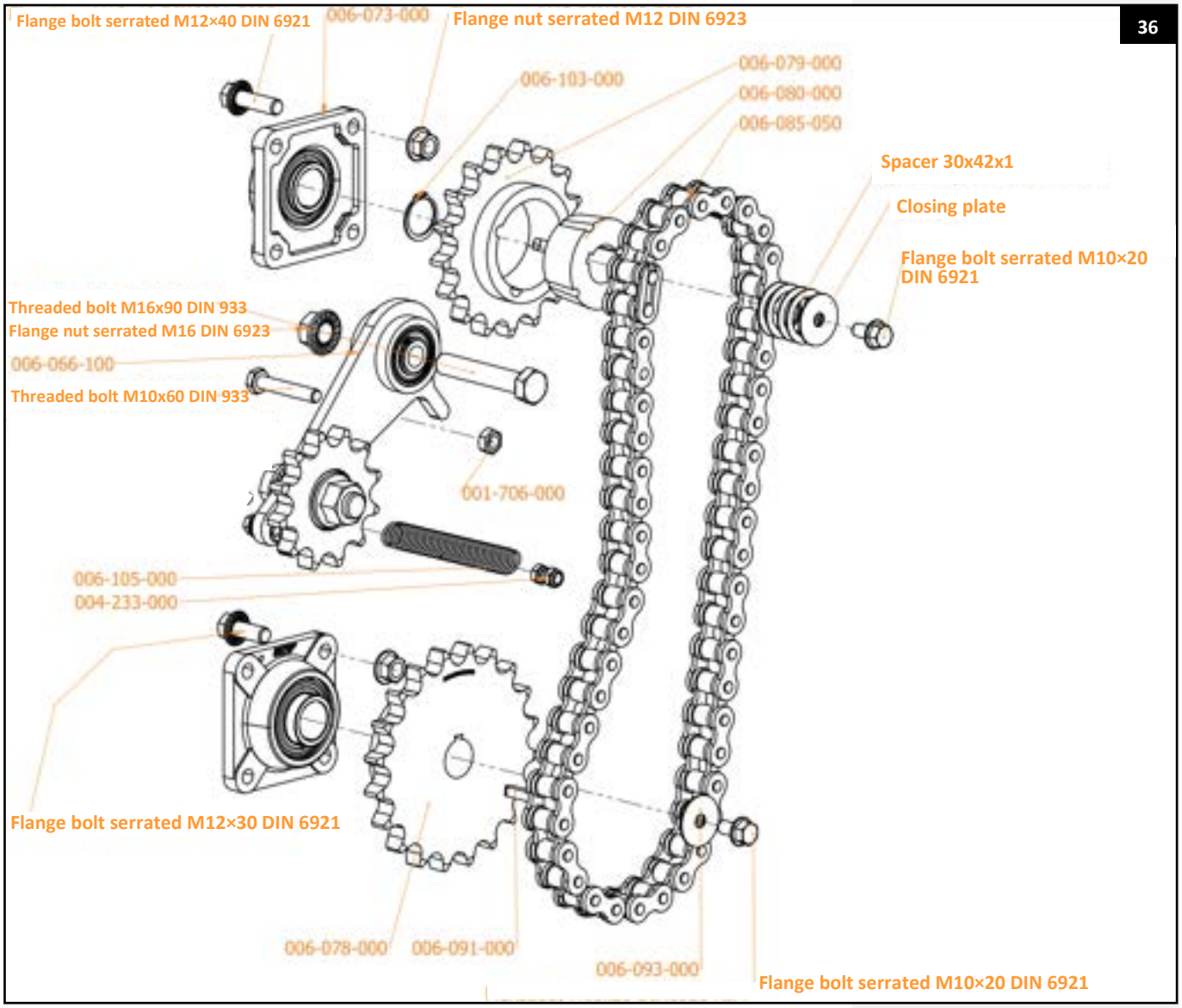

Art. no.	Description	Quantity
006-091-000	Parallel key 8x7x35	1
004-233-000	Low-profile lock nut M8 DIN 985	2
001-706-000	Hexagon nut M10 DIN 934	1
	Threaded bolt M10x60 DIN 933	1
	Flange bolt, serrated M10×20 DIN 6921	2
	Flange nut, serrated M12 DIN 6923	8
	Flange bolt, serrated M12×40 DIN 6921	4
	Flange bolt, serrated M12×30 DIN 6921	4
	Flange nut, serrated M16 DIN 6923	1
	Threaded bolt M16x90 DIN 933	1

Art. no.	Description	Quantity
006-093-000	Closing plate	2
006-085-050	Chain 16B for infeed roller	2
006-078-000	Sprocket 16B, 20-tooth	1
006-066-100	Tensioner sprocket, right	1
006-105-000	Tensioner spring	1
006-103-000	Circlip 30x1.5	1
	Spacer 30x42x1	4
006-079-000	Sprocket 16B, 17-tooth with 2012 clamping bush	1
006-080-000	Tapered clamping bush 2012 for 30 mm shaft	1
006-073-000	Flange bearing	2

Chain tensioner

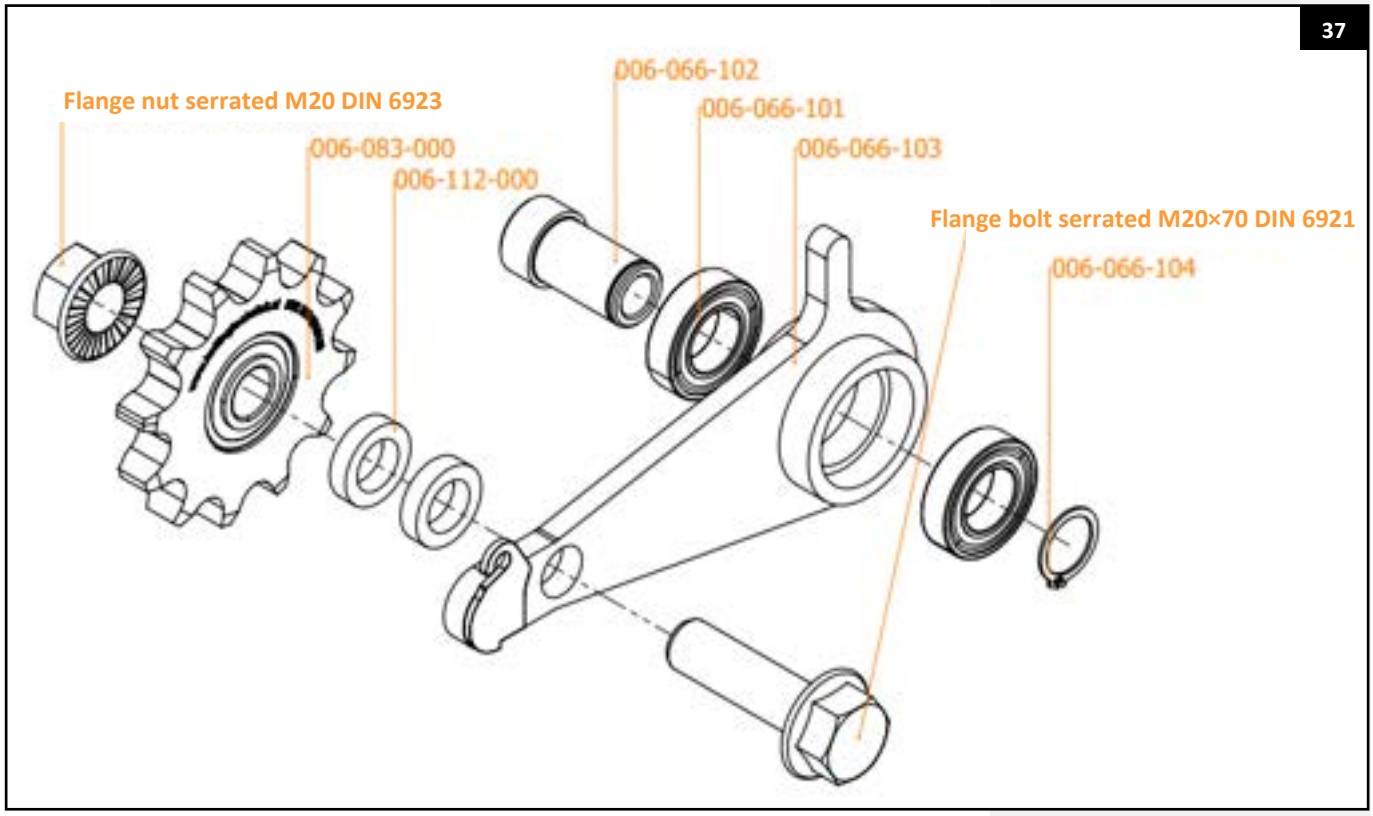

Art. no.	Description	Quantity
006-066-102	Tensioner bush	1
006-066-101	Bearing	2
006-066-103	Tensioner	1
006-066-104	Shaft retaining ring Ø25 mm DIN 471	1
006-083-000	Freewheel sprocket 16B-1, 12-tooth	1
006-112-000	Heavy-duty washer M20 21×44×8	2
	Flange bolt, serrated M20×70 DIN 6921	1
	Flange nut, serrated M20 DIN 6923	1

Main drive to slip clutch assembly

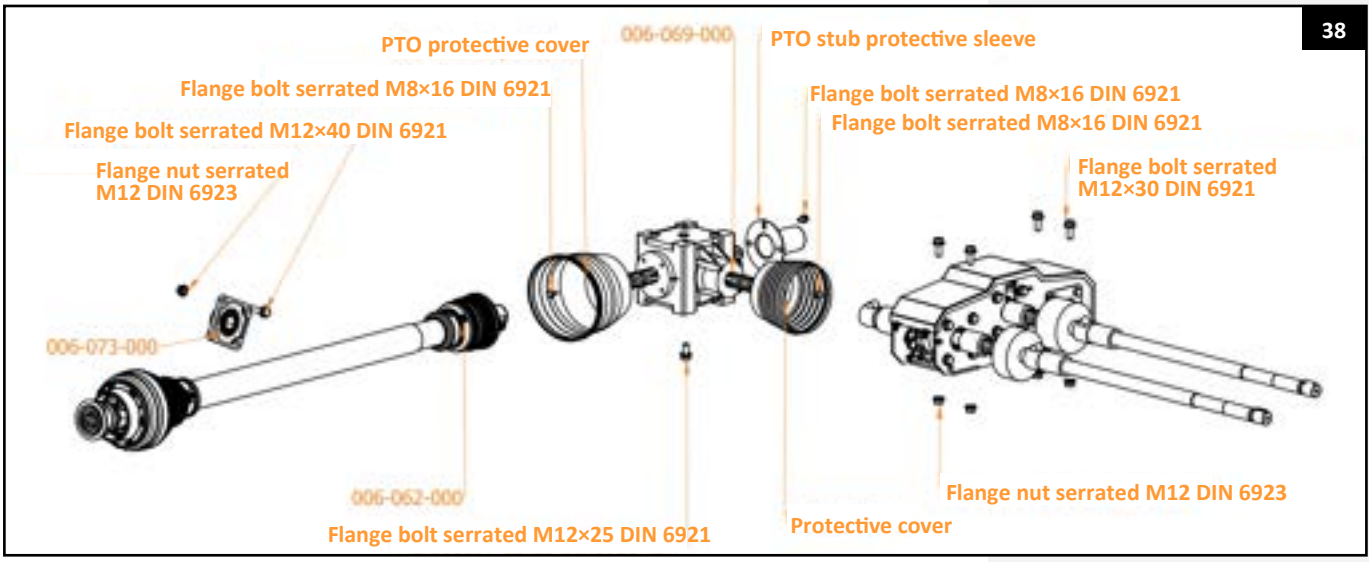

Art. no.	Description	Quantity
	Flange bolt, serrated M8×16 DIN 6921	12
	Flange nut, serrated M12 DIN 6923	8
	Flange bolt, serrated M12×25 DIN 6921	4
	Flange bolt, serrated M12×40 DIN 6921	4
006-062-000	PTO shaft with universal joint	1
006-069-000	Gearbox T-27A 1:1.92	1
006-099-000	Welded reversing gearbox with slip clutch V2	1
006-073-000	Flange bearing	1
	PTO protective cover	1
	Protective cover	1
	PTO stub protective sleeve	1
	Flange bolt, serrated M12×30 DIN 6921	4

Location of the shaking roller shafts in the BeddingCleaner

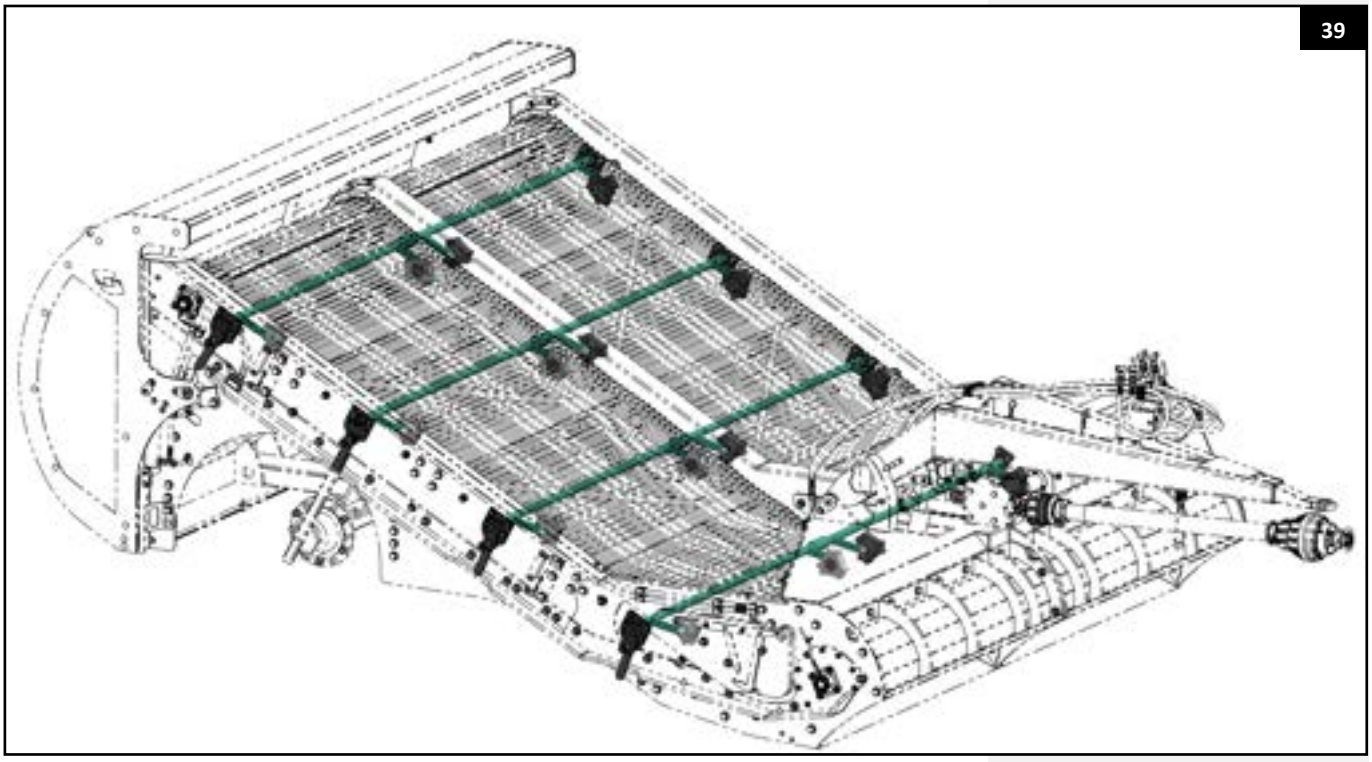

Shaking roller shaft parts list

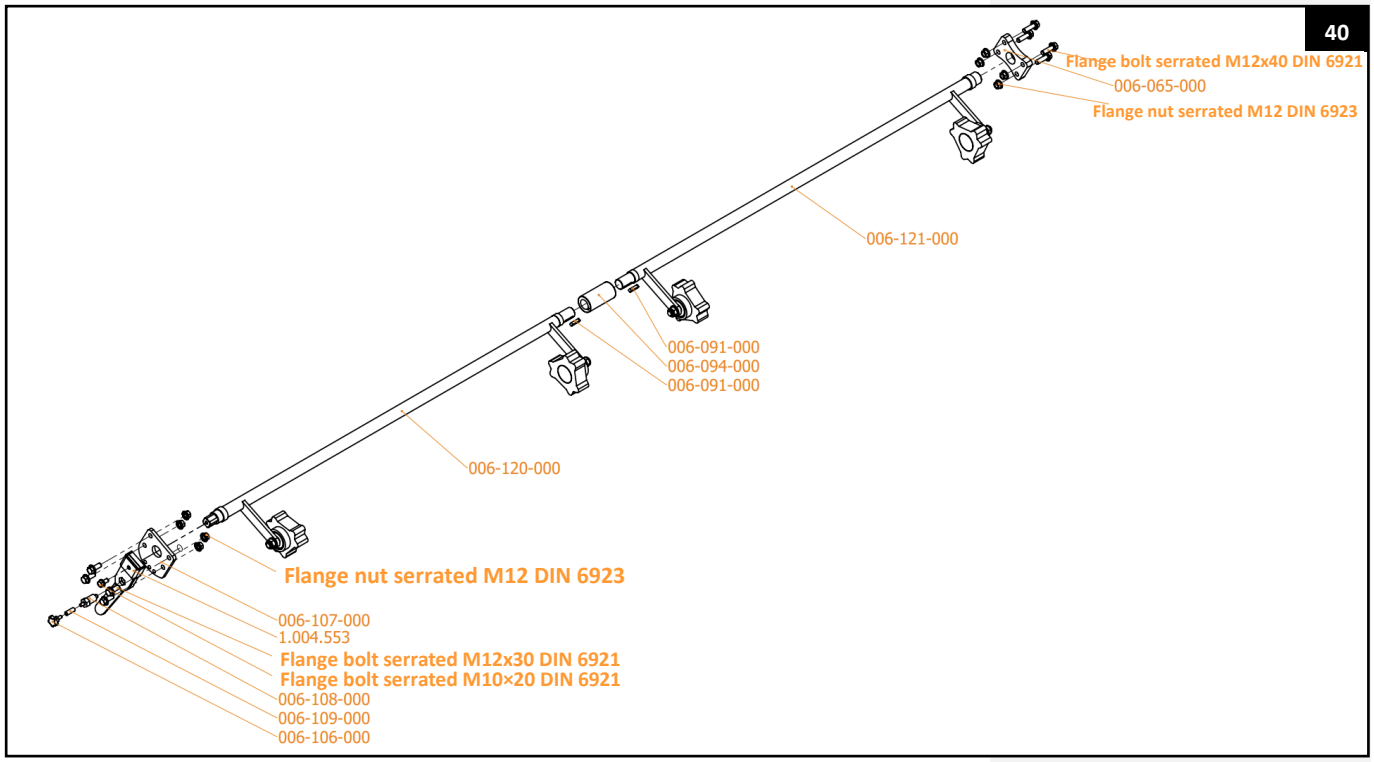

Art. no.	Description	Quantity
006-107-000	Flange plate with adjustment holes	1
	Holder for shaking roller tensioner	1
006-108-000	Locking pin with threaded screw	1
006-109-000	Coupling nut M8x30 round	1
006-106-000	Machine knob M8x30	1
006-091-000	Parallel key 8x7x35	2
	Flange bolt, serrated M10×20 DIN 6921	1
	Flange nut, serrated M12 DIN 6923	8
	Flange bolt, serrated M12x40 DIN 6921	4
	Flange bolt, serrated M12x30 DIN 6921	4
	Shaking roller holder with shaking rollers	1
006-094-000	Profile bush Ø30	1
006-065-000	Plastic bearing plate for shaking rollers	1
006-121-000	Shaking roller shaft, left	1
006-120-000	Shaking roller shaft, right	1

Hydraulic components and hydraulic locations

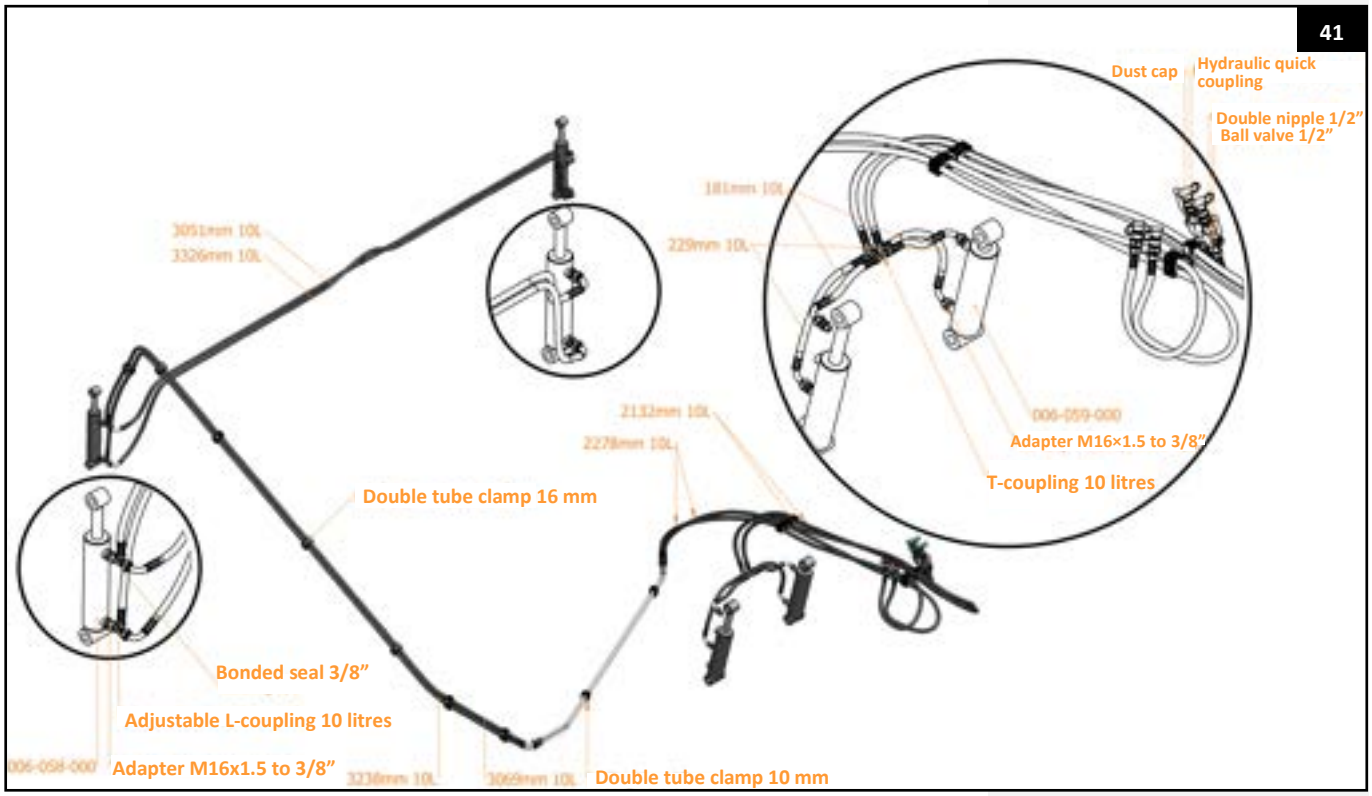

Art. no.	Description	Quantity
006-058-000	Hydraulic tipping cylinder	2
	Adapter M16x1.5 to 3/8”	8
	Adjustable L-coupling 10 litres	2
	Bonded seal 3/8”	16
	Hydraulic hose 3051 mm, 10 litres	1
	Hydraulic hose 3051 mm, 10 litres	1
	Hydraulic hose 3326 mm, 10 litres	1
	Hydraulic hose 3238 mm, 10 litres	1
	Hydraulic hose 3069 mm, 10 litres	1
	Hydraulic quick coupling 1/2”	4

Art. no.	Description	Quantity
	Hydraulic hose 2278 mm, 10 litres	2
	Hydraulic hose 2132 mm, 10 litres	2
	Hydraulic hose 229 mm, 10 litres	2
	Hydraulic hose 181 mm, 10 litres	2
	Double tube clamp 16 mm	11
	Double tube clamp 10 mm	2
006-059-000	Hydraulic drawbar cylinder	2
	T-coupling 10 litres	2
	Ball valve 1/2”	2
	Dust cap, green	2
	Dust cap, red	2

Sieve belt fastener set

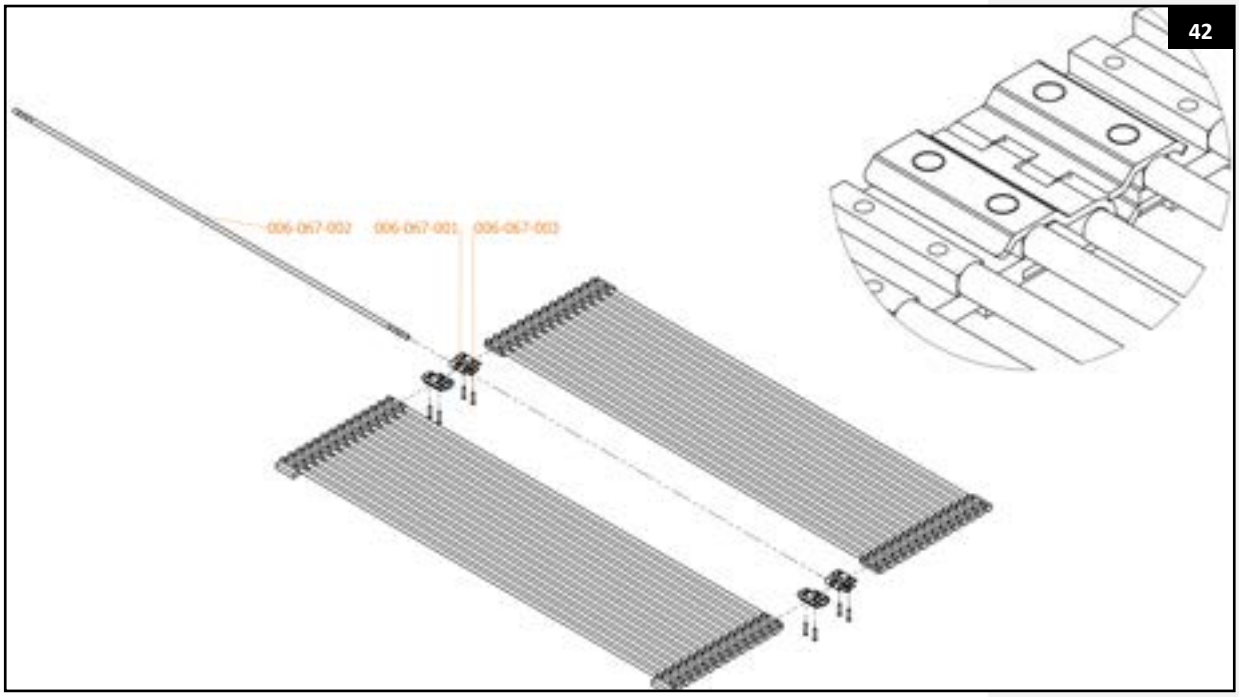

1. Remove the old fastener plates using an angle grinder. Take care not to damage the old sieve belt rod.
2. Place the new fastener plates onto the belt, ensuring the last rod is correctly positioned between the belt and the fastener plate.
3. Insert the rivets into the holes of the fastener plates.
4. Support the rivets from the underside of the sieve belt to prevent them from falling back.
5. Rivet the tops of the rivets with a hammer.
6. The fastener plate is correctly installed when the rivets are driven in such a way that the belt expands approximately 10% wider within the fastener plate.

Art. no.	Description	Quantity
006-067-002	Sieve belt fastener rod	1
006-067-001	Sieve belt fastener plate	4
006-067-003	Rivet 6 × 30	8

Sieve belt spare rod

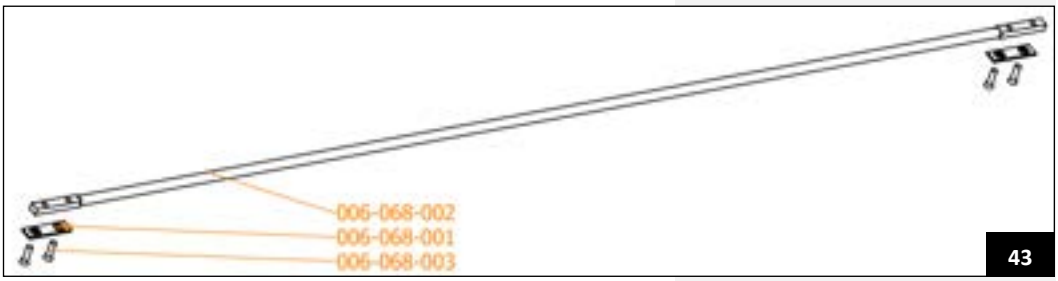

1. Remove the damaged sieve belt rod.
2. Place the new sieve belt rod onto the sieve belt.
3. Position the rivet plate underneath the belt.
4. Insert the new rivets from the underside, through the sieve belt rod and the rivet plate.
5. Support the rivets and the rivet plate underneath the belt on a solid surface.
6. Rivet the tops of the rivets with a hammer until the sieve belt rod is firmly secured.

Art. no.	Description	Quantity
006-068-001	Sieve belt spare rod	1
006-068-001	Sieve belt rivet plate	2
006-068-003	Rivet 6 × 22	4

Infeed roller

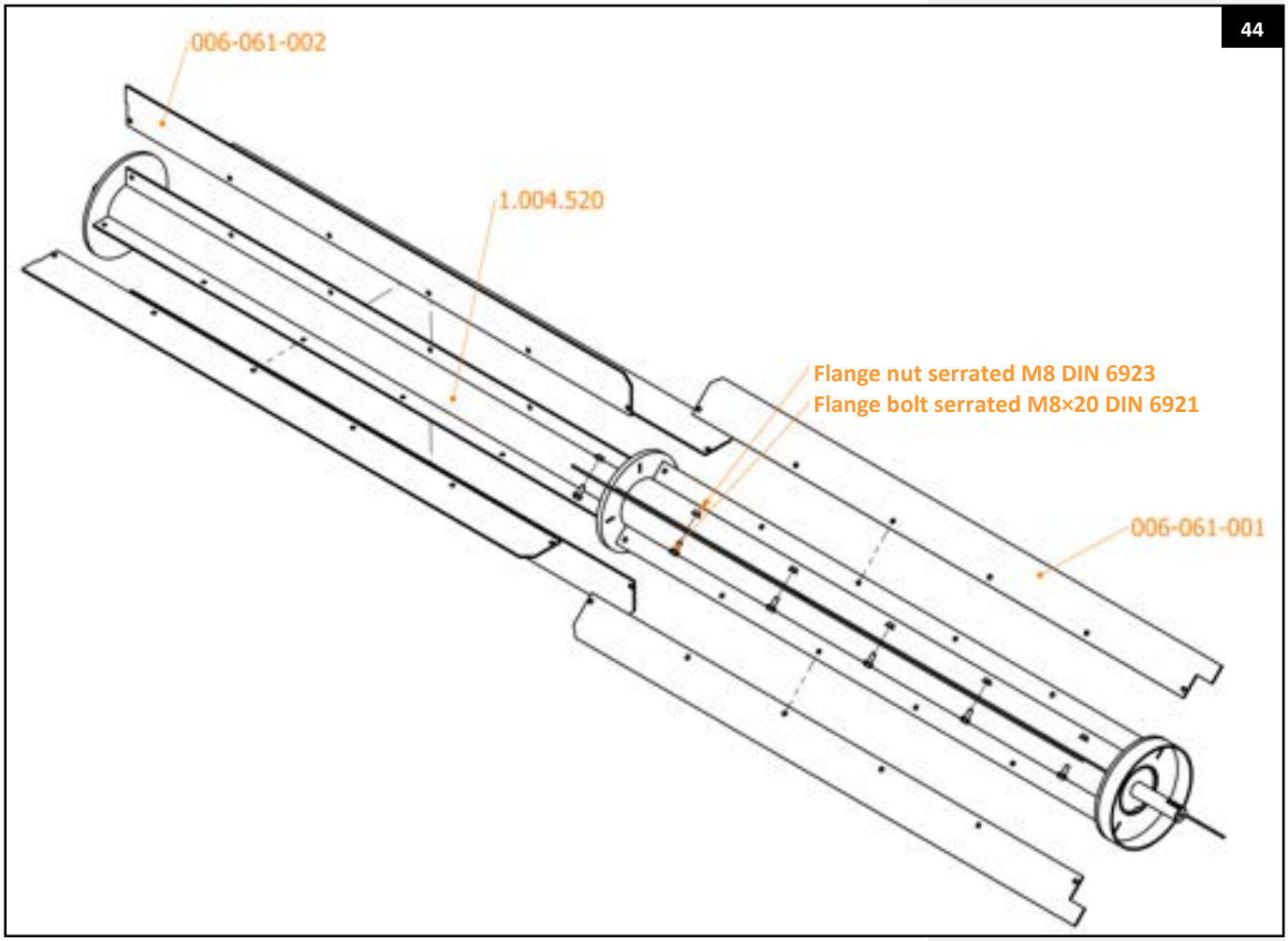

Art. no.	Description	Quantity
	Infeed roller assembly	1
006-061-001	Plate for left pick-up roller	4
006-061-002	Plate for right pick-up roller	4
	Flange bolt, serrated M8×20 DIN 6921	48
	Flange nut, serrated M8 DIN 6923	48

Flap

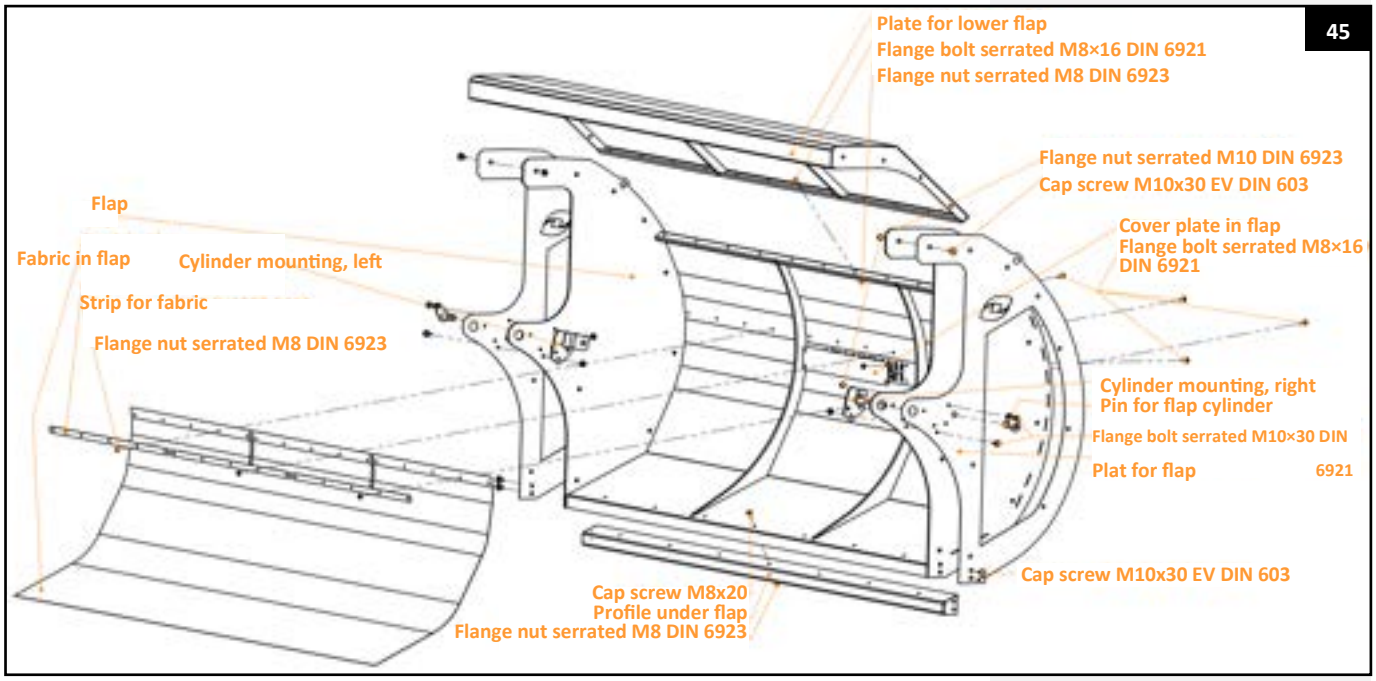

Art. no.	Description	Quantity
	Flap V5	1
	Profile under flap	1
	Flap plate	2
	Fabric in flap	1
	Strip for fabric	3
	Flap cylinder pin	2
	Upper part of flap	1
	Cover plate in flap	1
	Flange bolt, serrated M10×30 DIN 6921	8
	Flange nut, serrated M10 DIN 6923	26
	Flange nut, serrated M8 DIN 6923	42
	Flange bolt, serrated M8×16 DIN 6921	31
	Cap screw M8x20	7
	Carriage bolt M10×30 EV DIN 603	22
	Cylinder mounting, right-hand	1
	Cylinder mounting, left-hand	1

Reversing gearbox

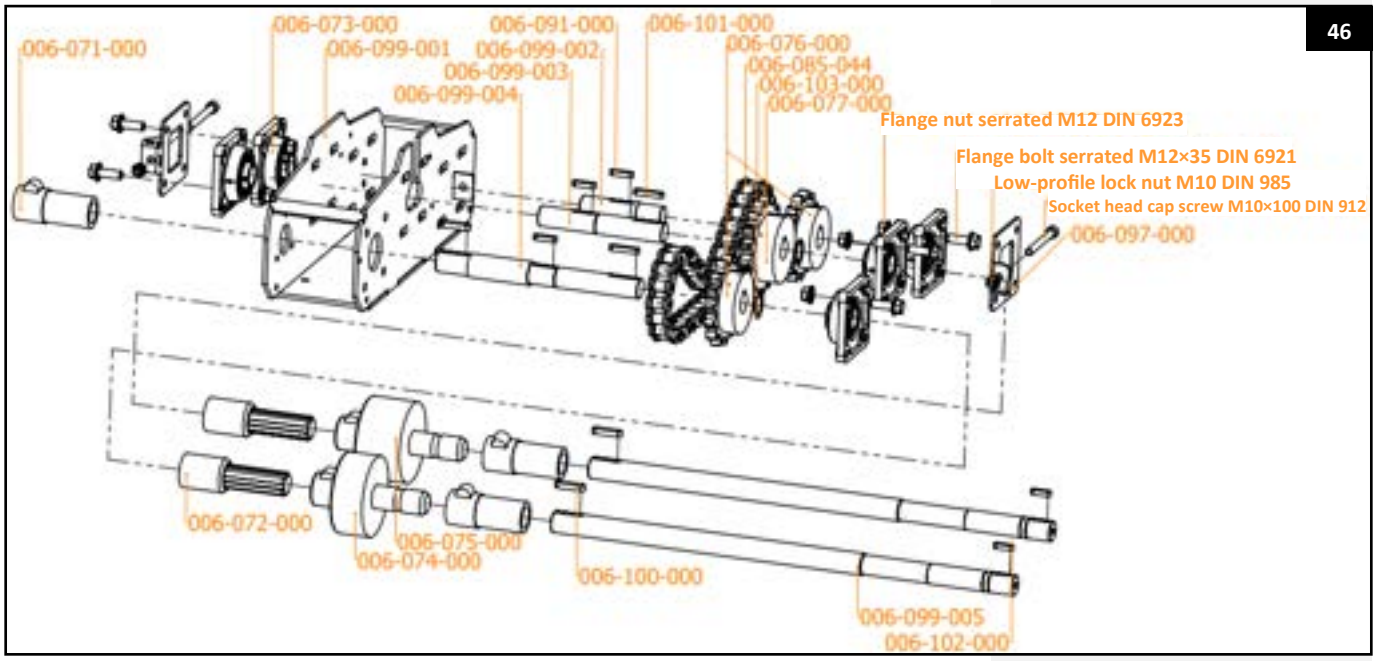

Art. no.	Description	Quantity
006-099-001	Slip clutch gearbox, welded assembly	1
006-073-000	Flange bearing	5
006-085-044	PTO chain 25.4 × 17.02	1
006-099-002	32 mm → 30 mm freewheel shaft slip clutch gearbox	1
006-099-003	30 mm → 30 mm second drive shaft slip clutch gearbox	1
006-099-004	Main shaft slip clutch gearbox 32 → 35 → 30	1
006-072-000	PTO shaft to 30 mm	2
006-099-005	Drive shaft slip clutch gearbox → drive sprocket 32 → 30	2
006-075-000	Short slip clutch 800 Nm, 192 mm	1
006-074-000	Short slip clutch 400 Nm	1
006-071-000	PTO adapter bush 6-spline to 32 mm internal	3

Art. no.	Description	Quantity
006-100-000	Parallel key 10x8x45	3
006-101-000	Parallel key 8x7x45	2
006-102-000	Parallel key 8x7x30	2
006-076-000	Gear 16B, 15-tooth, bore 30 mm	2
006-077-000	Gear 16B, 17-tooth, bore 30 mm	1
006-103-000	Shaft retaining ring Ø30 mm DIN 471	2
006-091-000	Parallel key 8x7x35	3
006-097-000	Bearing for tensioning plate	2
	Flange nut, serrated M12 DIN 6923	5
	Flange bolt, serrated M12×35 DIN 6921	5
001-866-000	Low-profile lock nut M10 DIN 985	2
006-113-000	Socket head cap screw M10x100 DIN 912	2

Reversing gearbox - cover caps

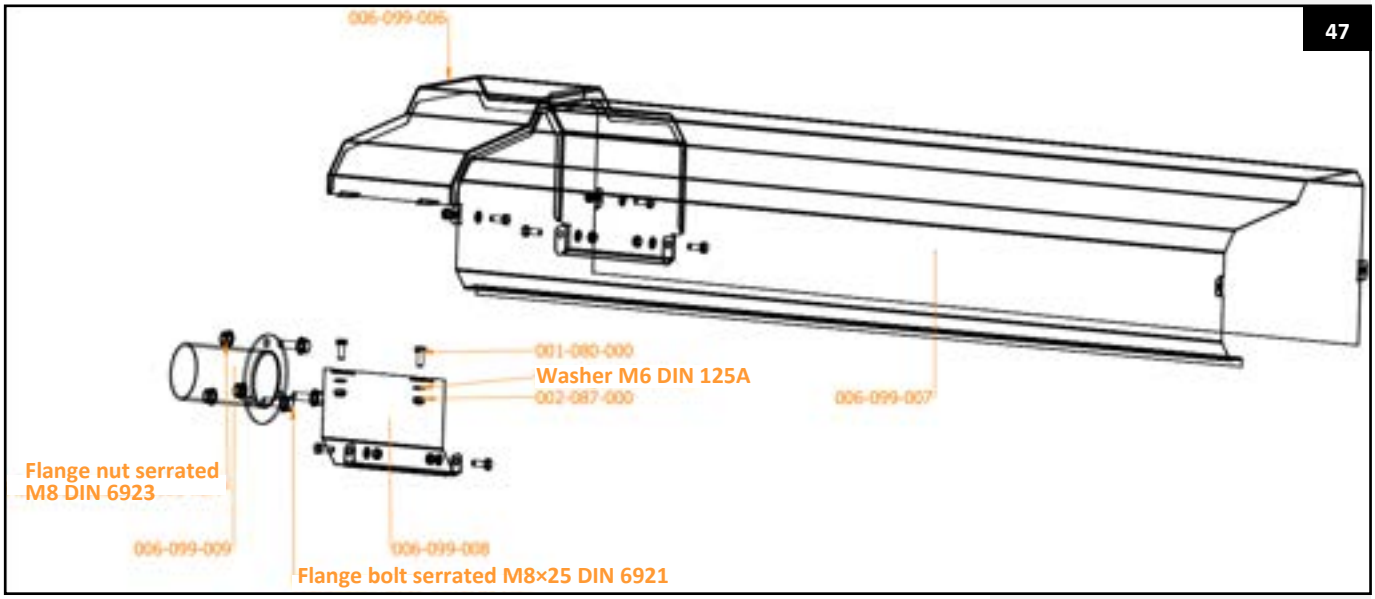

Art. no.	Description	Quantity
006-099-006	Slip clutch cover	1
006-099-007	Cover for dual drive shafts	1
006-099-008	Fixed front plate for slip clutch gearbox, left	1
006-099-009	Protective sleeve for rotating shaft	1
	Flange bolt, serrated M8×25 DIN 6921	3
	Flange nut, serrated M8 DIN 6923	3
001-080-000	Threaded bolt M6 x 16 DIN 933	8
004-211-006	Washer M6 DIN 125A	8
002-087-000	Low-profile lock nut M6 DIN 985	8

Hanskamp AgroTech BV
Xenonstraat 6
7031 HX Wehl
The Netherlands
Tel: +31 (0)314 - 393 797
www.hanskamp.com

Also take a look at: