FeedStation Walk-Through

043-000-000
& 044-000-000

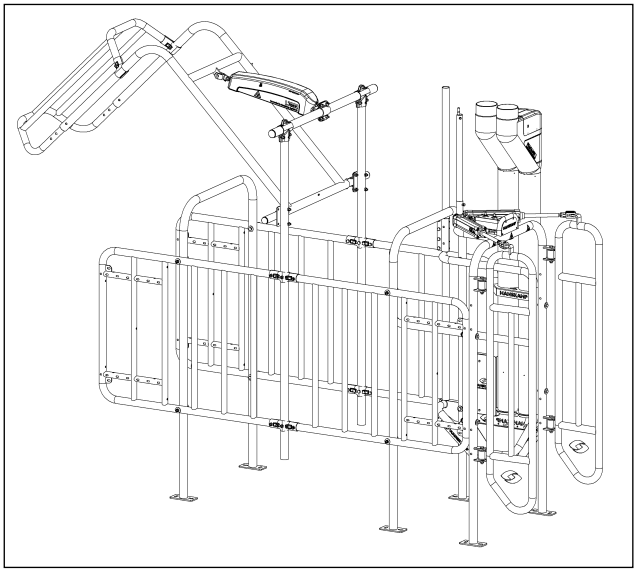

Voerstation
Out of parlour feeder
Futterstation
Distribution alimentation concentré (DAC)

Installation and Operating Instructions **EN**

HANSKAMP
Innovation for dairy farming

Article number: 010-093-000

Date: May 2026
Version 3.0 - Translation of original Installation and Operating Instructions
According to Annex 1 Section 1.7.4 of the Machinery Directive 2006/42/EC

Wehl,
The Netherlands
www.hanskamp.com

Foreword

Contents of the installation and operating instructions

This manual contains the information required to correctly install and operate the Hanskamp FeedStation Walk-Through. Please read this information carefully and make sure you understand everything before configuring the FeedStation Walk-Through. Failure to do so may result in damage to the equipment. Please contact Hanskamp if any of the information is unclear or if you require further information.

All information in this manual has been compiled with care. Hanskamp is not liable for any errors or omissions in this manual. The recommendations are intended as guidelines. All instructions, illustrations and specifications in this manual are based on the latest information available at the time of publication. Your FeedStation Walk-Through may include improvements, features or options that are not covered in this manual.

Applicability

The table below shows the type number of the FeedStation Walk-Through to which this manual applies.

Model designation

Model	Type number
FeedStation Walk-Through	044-000-000

Contact number of milking technology dealer

We recommend that you enter the name, phone number and e-mail of your milking technology dealer in the table below, so that you can always find the right information easily.

Name	
Address	
Phone number	
E-mail	

1. Introduction

The Hanskamp Walk-Through concentrate feeding station allows cows to exit from the front, catering to their natural behaviour. Many feeding stations require cows to exit the station backwards. Cows attempting to exit are often bumped into by other cows trying to enter; this can result in injuries to udders and legs. This is prevented by closing the station at both ends and allowing the cow to exit from the front. This also reduces strain on the cows' hooves and legs. An additional benefit is that particularly low-ranking cows feel safer.

The Hanskamp FeedStation Walk-Through consists of a side fence with a fixed feed trough, three additional side fences, a PipeFeeder feed dispenser, and an L'port closing gate at the rear of the station. The front of the station is fitted with a T'port closing gate. Optionally, the station can be expanded with an additional feed type by adding an extra PipeFeeder and MultiDos with container.

The information in this manual is intended for dairy farmers and technicians.

- Dairy farmers can use the information to test and calibrate the FeedStation Walk-Through or to display reports.
- Technicians can use the information to install and setup the FeedStation Walk-Through.

2. Safety

2.1 Introduction

The 'Safety Warning' symbol warns about important safety messages on your FeedStation Walk-Through, L'port and T'port in the manual. Use caution if you see this symbol; it means there is a risk of personal injury or death. Follow the directions of any safety messages.



Safety Warning Symbol

2.2 Warning Texts

Note the use of the warnings **CAUTION** and **DANGER** in the safety messages. The following guidelines apply to these warnings:



Caution! Indicates a potentially hazardous situation which could result in minor personal injury or damage to equipment or the environment if the warning is ignored.



Danger! Indicates a potentially hazardous situation which could result in death or serious injury if ignored.

2.3 Safety Instructions

You are personally responsible for operating and maintaining your FeedStation Walk-Through safely. You must ensure that you and anyone else who operates, maintains, or works in the vicinity of the FeedStation Walk-Through are familiar with all safety information in this manual.

Safety is in your hands. Proper safety measures protect you and those around you. Incorporate these measures into your safety programme. Make sure that everyone who uses, maintains, or works in the vicinity of the FeedStation Walk-Through is aware of these safety measures. Do not risk injury or death by ignoring safety precautions.

- FeedStation Walk-Through owners must train users before they operate the FeedStation Walk-Through. This training must be repeated at least once a year.
- The user must read, understand, and follow all safety and operating instructions in this manual.
- Anybody who has not read and understood all the safety and operating instructions must not operate the FeedStation Walk-Through.
- Do not make any modifications to the equipment. Unauthorised modifications may affect operation, reduce service life, and/or result in personal injury.
- Only use original spare parts, and make sure that they are fitted by authorised technicians.

2.3.1 General safety

- Make sure that you have read and understood the manual and the safety instructions before connecting the power supply to operate or adjust the FeedStation Walk-Through, or before switching it off for maintenance.
- Only trained personnel may operate the FeedStation Walk-Through.
- A carbon dioxide or foam fire extinguisher must be available near the FeedStation Walk-Through. Store the fire extinguisher in a clearly visible location.
- Install all guards and safety devices before using the FeedStation Walk-Through.
- Wear the correct personal protective equipment (PPE).
- Disconnect and isolate the electrical power supply before cleaning or carrying out maintenance on the FeedStation Walk-Through. Ensure that the compressed air supply is depressurised.
- Make sure that phone numbers of emergency medical care available in your area are at hand.
- If you have any questions, please contact your milking technology dealer.
- Review all safety-related topics with all users at least once a year.

2.3.2 Electrical safety

- Only a qualified electrician may install the FeedStation Walk-Through power supply.
- Check whether the earthing of the electrical system and all parts of the FeedStation Walk-Through comply with local rules and regulations.
- Replace any damaged electrical cables, cable sheaths, switches and parts immediately.
- Isolate or switch off the power supply before opening the lid of the FeedStation Walk-Through to work on the electrical system.

2.3.3 Safety during installation

- Make sure that you have read and understood the instructions in this manual.
- Check whether the FeedStation Walk-Through has been installed correctly, as described in the manual.

2.3.4 Safe operation

- Make sure that you have read and understood the manual and the safety instructions before connecting the power supply to operate or adjust the FeedStation Walk-Through, or before switching it off for maintenance.
- Only trained personnel may operate the FeedStation Walk-Through.
- Switch off the electrical power supply before cleaning or carrying out maintenance on the FeedStation Walk-Through. Ensure that the compressed air supply is depressurised; switch off the compressor and close the air valve.
- Install all covers and guards before operating the FeedStation Walk-Through.
- Keep hands, feet, hair and clothing away from live parts.
- Keep all unauthorized persons, especially small children away from the FeedStation Walk-Through at all times.
- Before connecting the FeedStation Walk-Through to the power supply, make sure that all parts are properly tightened and that all cables and mountings are in good condition.
- If you have any questions, please contact your milking technology dealer.

2.3.5 Safety during maintenance

- Make sure that you have read and understood the manual and the safety instructions before connecting the power supply to operate or adjust the FeedStation Walk-Through, or before switching it off for maintenance.
- Only trained personnel may service and maintain FeedStation Walk-Through.
- Before cleaning the FeedStation Walk-Through or carrying out maintenance, switch off the power supply by removing the plug from the socket.
- Wear protective clothing and safety goggles when working on the pneumatic system.
- Make sure all guards and safety devices are installed after completing maintenance work.

2.3.6 Safety messages

- This chapter lists the general safety messages. Specific safety messages, where potential hazards may arise if procedures or instructions are not followed, are included in the relevant sections of this manual

2.3.7 Compressed air quality prescription

Lubrication

The cylinders used by Hanskamp AgroTech are designed for operation with non-lubricated air. This means that no routine maintenance is required. If lubricated air is used, lubrication must be continuous, as additional lubrication will wash away the lubricant applied at the factory.

Recommended oils

ISO and UNI FD22 (e.g. Energol HPL, Spinesso, Mobil DTE, Tellus Oil).

Air quality

With reference to ISO/DIN 8573-1, the compressed air used must be class 3-4-3, i.e.:

Solid particle class 3	≤ 10,000 particles/m³ with d ≤ 5 µm
Humidity class 4	Pressure dew point ≤ +3 °C
Oil class 3	Total oil concentration ≤ 1 mg/m³

Miscellaneous

Maximum pressure	10 bar (valves, cylinders)
Minimum pressure	2.5 bar (valves)
Supply line	Ø8-Ø12 mm
Air consumption	At 6 bar approx. 20 litres per visit
Intermediate piping in installations	Ø6-Ø8 mm

Caution! Ensure that the speed controller and end cushioning are never fully unscrewed. These ensure that the cylinder cannot be damaged by excessively high incoming or outgoing speed. The correct adjustment can be found in the relevant installation and user instructions.

Caution! Never install the cylinder under radial load. The cylinder is only suitable for axial loads on the piston rod.

3. Installation and Operating Instructions

General description
The Hanskamp FeedStation Walk-Through is a universal and modular walk-through feeding station, developed to provide cows individually with their portion of concentrate feed. The FeedStation Walk-Through is supplied as standard with PipeFeeder concentrate dispensers and can be expanded to a maximum of two feed types (one PipeFeeder equals one feed type). In addition, the FeedStation Walk-Through is supplied as standard with an L'port closing gate (art. no. 004-029-000) and a T'port (art. no. 004-330-002) (fig. 1).

This installation instruction guides you step by step through the installation of the FeedStation Walk-Through. Always read these instructions in full and comply with the safety regulations. Installation examples can be viewed at **www.hanskamp.com**. See the appendix for order numbers and the names of individual components.

Transport and storage
The FeedStation Walk-Through is transported on a pallet. This pallet is fully sealed, and the corners are taped to prevent damage during transport. Storage of the FeedStation Walk-Through should be carried out in the same manner.

Caution! Always move the pallet using suitable handling equipment (forklift, pallet forks, pallet truck, etc.).

Caution! When unpacking the pallet, parts of the pallet may fall off.

Type designation: Can be found on the T'port control box (art. no. 002-481-000).

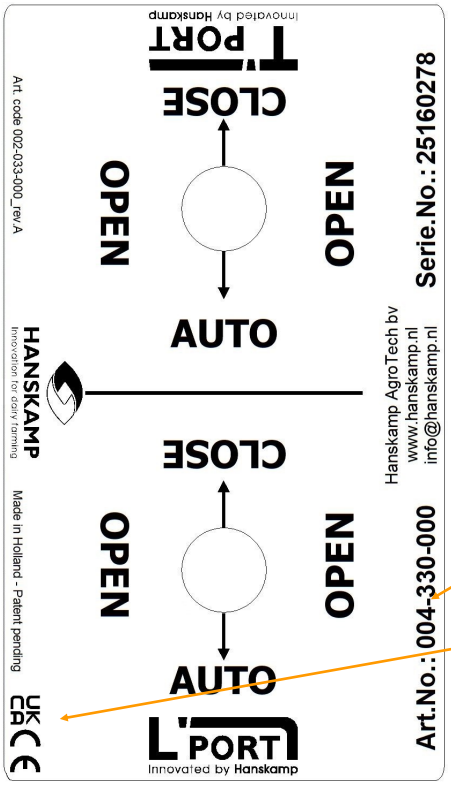

1

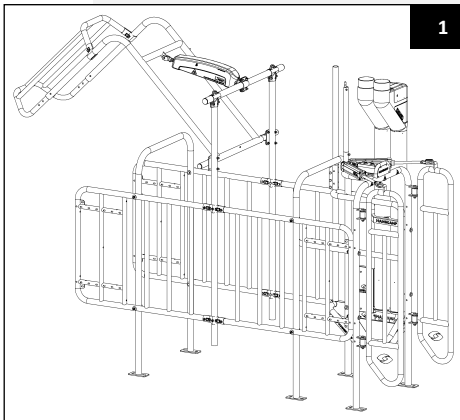

2

The pallet includes (for 1 Feed-Station Walk-Through 044-061-000):

3x art. no. 004-200-000 Side fence FS
1x art. no. 004-306-000 Side fence FS-WT incl. feed trough
2x art. no. 004-202-000 Frame FS
1x art. no. 004-321-000 Set of mounting materials FS-WT
4x art. no. 004-115-000 Double T-clamp 1½" x 1¼"
1x art. no. 028-030-000 PipeFeeder low cap.*
1x art. no. 004-029-000 L'port closing gate
1x art. no. 004-330-002 T'port (front) FS-WT

* Variable depending on the number of feed types ordered.

Safety stickers

The user and installer are responsible for the safe operation and maintenance of the Feed-Station Walk-Through. To ensure safety around the FeedStation Walk-Through, safety stickers are used. These stickers must be applied correctly. This installation and operating manual indicates where each sticker should be placed (see e.g., fig. 3).

Applying the stickers

- Make sure the surface where the sticker will be applied is dry and clean.
- Ensure the surface temperature is at least 5 °C.
- Determine the correct position for the sticker.
- Remove a small part of the backing film from the sticker.
- Position the sticker on the surface and press part of the adhesive area onto it.
- Carefully remove the remaining backing film and apply the rest of the sticker.
- Pierce any air bubbles with a needle and use the backing film to smooth the sticker.

Maintaining the stickers

- Keep safety stickers clean and legible. Clean the stickers with water and soap. Do not use solvents or abrasive materials that may damage the stickers.
- Replace any unreadable stickers or missing stickers immediately.

Safety stickers are available from Hanskamp. Always mention the correct article number in correspondence.



001-702-000 Warning sticker
Place the supplied stickers on the moving part, where the moving part comes into contact with the frame. See fig. 5



001-703-000 Warning sticker
Place the supplied stickers on the moving part, where the hinge tube is inserted and contacts the frame of the T'port. See figs. 3, 4 and 5.



001-755-000 & 010-260-000 Warning sticker
Apply the supplied stickers to the cylinder cap on the piston rod side. See figs. 4 and 5.

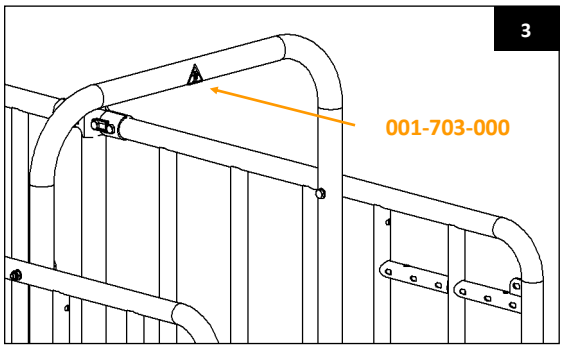

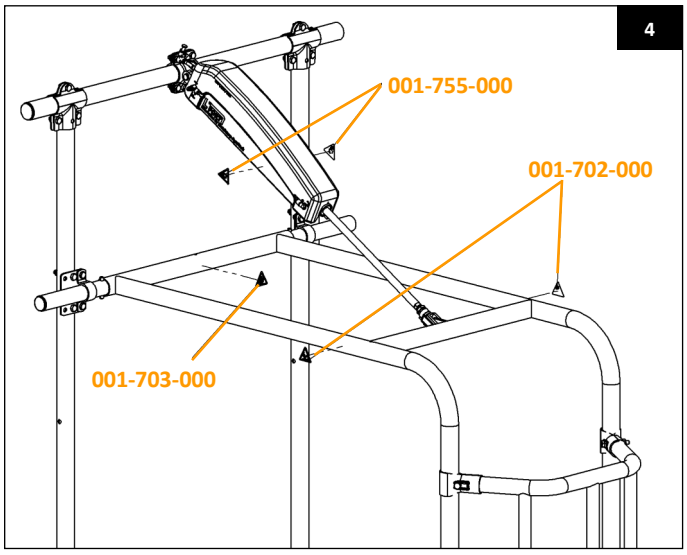

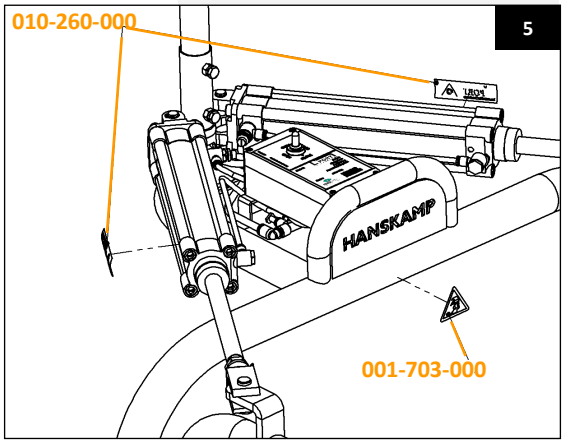

Assembly

1. Check the parts list to ensure that all components are present.

Caution! No electronics are supplied for controlling the FeedStation Walk-Through and the associated PipeFeeders.

Caution! The FeedStation Walk-Through must be installed on a solid and properly constructed base.

Caution! It must not be possible for cows to lie down in the exit route of the Feed-Station Walk-Through.

2. First install the side fences (art. no. 004-200-000). Use the double T-clamps (art.no. 004-115-000) for this purpose (fig. 6A).

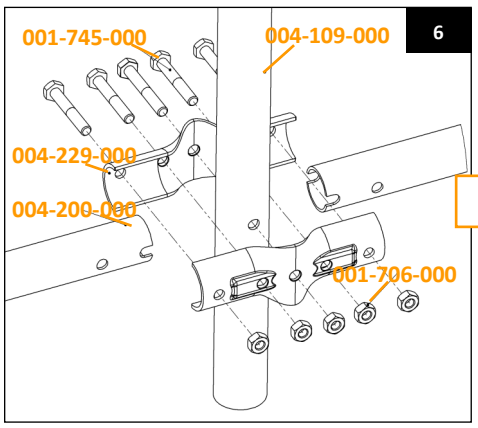

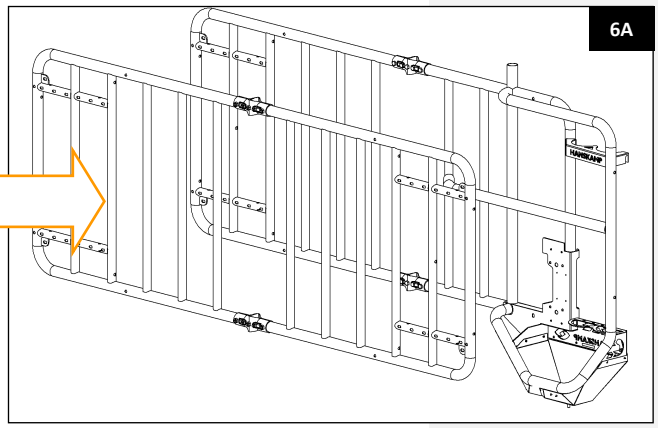

3. Mount one of the two frames (art. no. 004-202-000) on the feed trough side using the mounting hardware (fig. 7B).

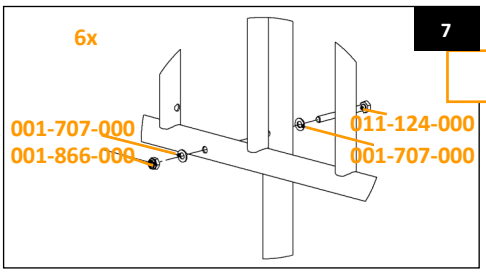

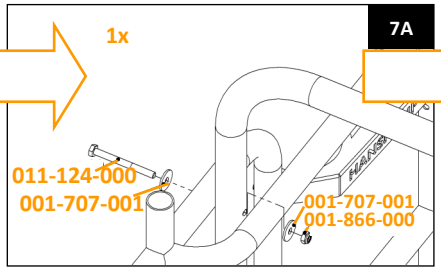

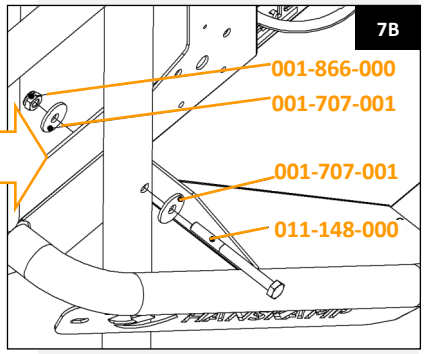

4. Position the second frame between the side fences and mount it using the mounting hardware, as described in step 3 (fig. 8).

Caution! Ensure that the side fences and frames are installed completely level (both vertically and horizontally). Then secure them firmly.

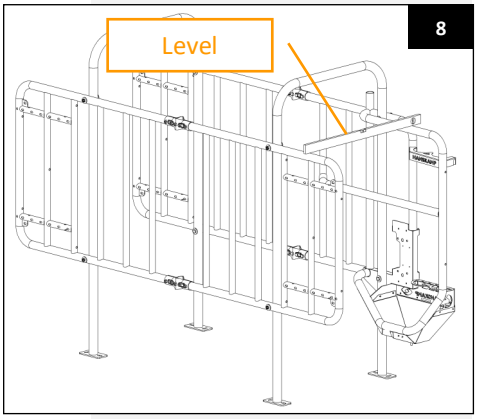

5. Place the standing leg tubes (art. no. 004-109-000) of the L'port closing gate between the side fences (fig. 9).
6. Install the mounting hardware for the hinge tube onto the standing leg tubes (figs. 10 and 11).

Caution! Do not fully tighten the mounting hardware yet, otherwise the hinge tube cannot be slid through the cap brackets.

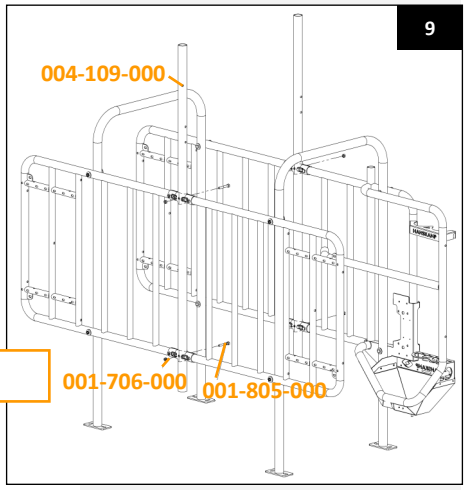

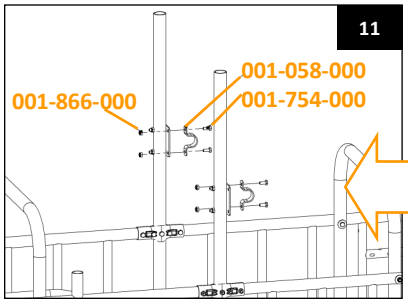

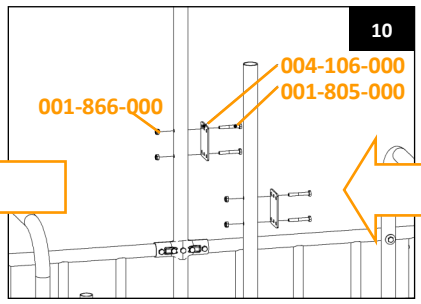

7. Slide the hinge tube (art. no. 004-108-000) through the cap brackets and through the moving element (art. no. 004-111-000). Position the hinge tube so that an equal length protrudes on both sides (fig. 12).
8. Secure the moving elements by driving the spring pins through the hinge tube on both sides using a hammer (fig. 13).

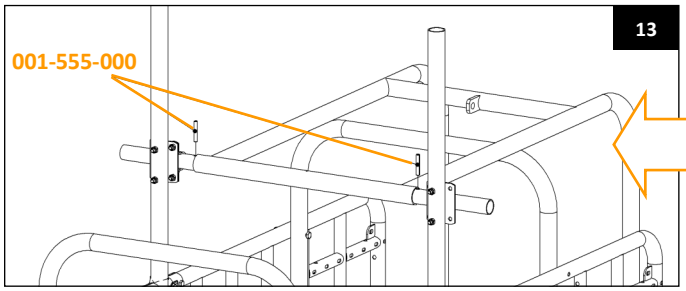

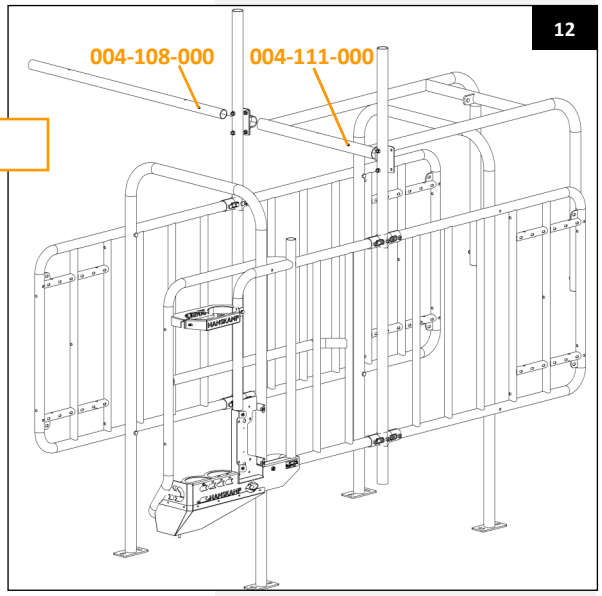

9. Install the cylinder support tube (art. no. 004-110-000) onto the standing leg tubes using the two double-shell T-clamps (art. no. 004-114-000).
10. Cut off the protruding ends of the hinge tube, cylinder support tube, and standing leg tubes 1 cm below the double T-clamp (fig. 15).

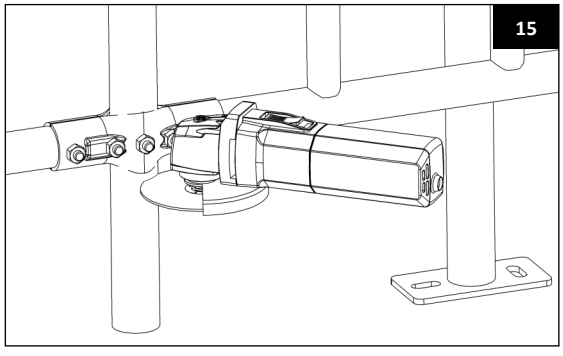

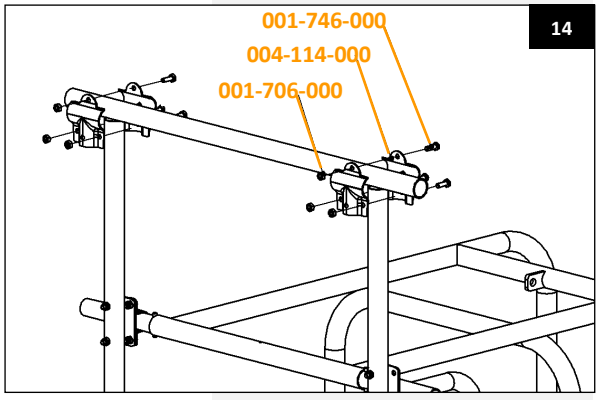

11. Now place the double 4-hole half shell (art. no. 004-045-000) in the centre of the hinge tube (art. no. 004-108-000). Ensure that the holes are positioned horizontally opposite each other (fig. 16) and secure it.

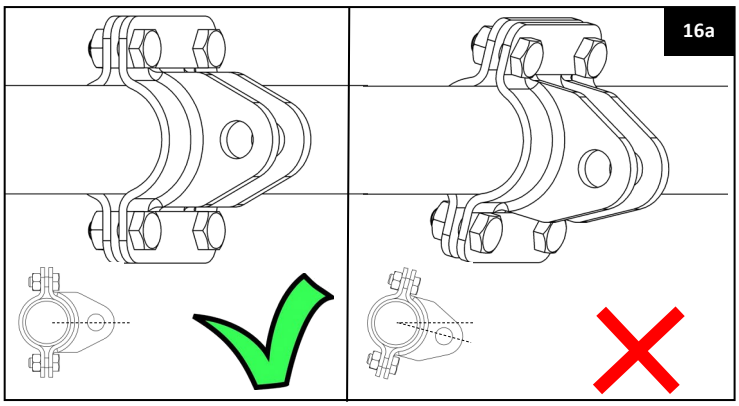

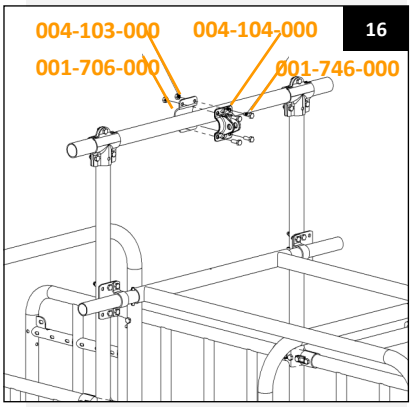

Caution! Ensure that the cylinder mounting tube is securely fixed and cannot rotate in the 3-hole T-clamp.

Caution! Also ensure that the double 4-hole half shell cannot rotate on the cylinder mounting tube, and that it is correctly positioned in the centre and aligned horizontally in relation to the tube. Incorrect installation will affect the operation of the L'port closing gate.

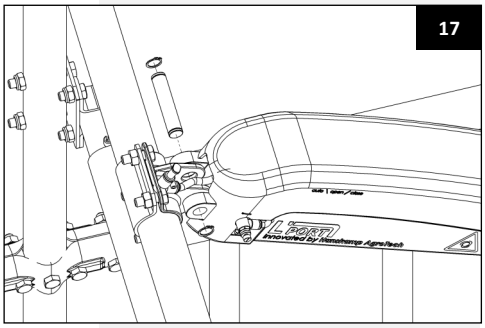

12. Place the cylinder set (art. no. 004-052-000) between the moving element and the cylinder support tube. Attach the pin of the double-clevis rear hinge to the double 4-hole half shell (fig. 17).
13. Mount the cylinder clevis to the clevis mounting on the moving element (fig. 18).
14. Install the extension element (art. no. 004-112-000) onto the moving element using the supplied bolts, nuts and clamps (art. no. 001-611-000) (fig. 19).

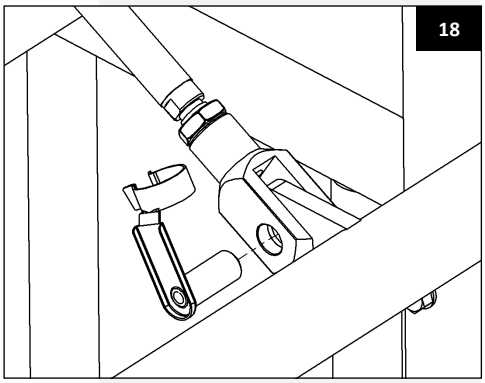

Caution! Carefully adjust the extension element to ensure that the cow's udder is properly protected. Also take into account the clearance height when the L'port closing gate is in the open position.

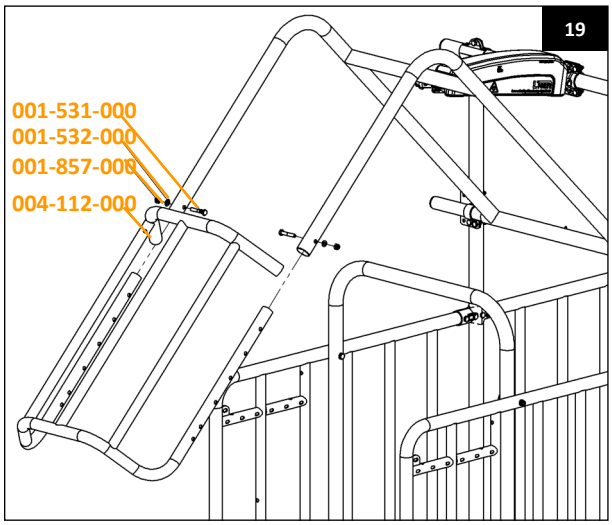

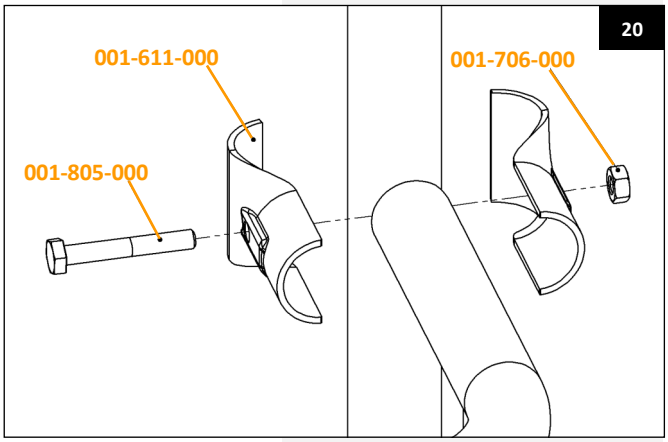

T'port Installation (Front Gate)

First, the standalone assembly of the T'port is shown. Later in the manual, instructions are provided on how to position the T'port in front of the FeedStation.

1. Mount the two gates (art. no. 004-331-000) using the sliding bearing bushes (fig. 21).

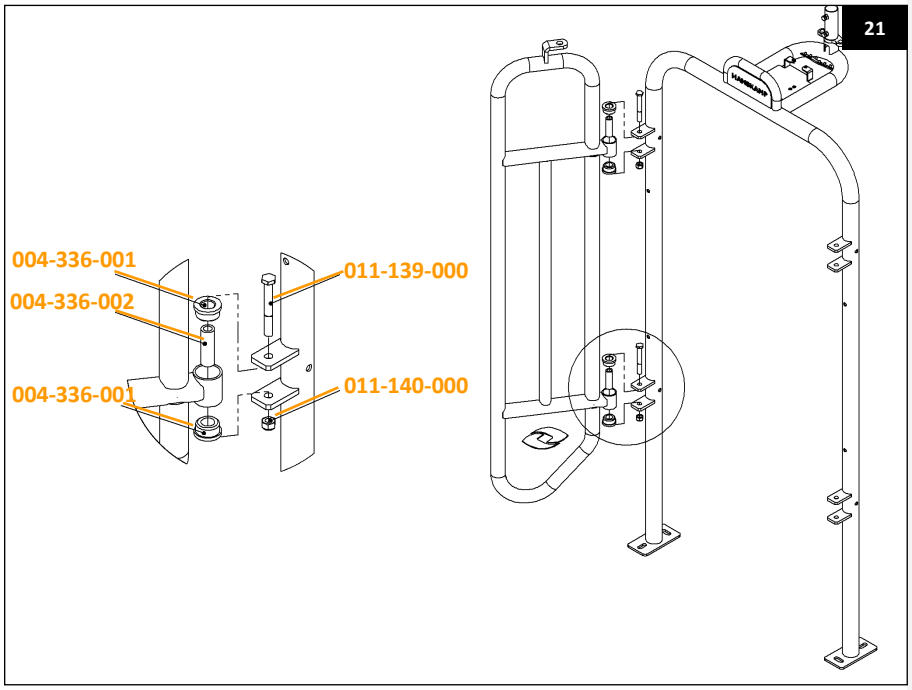

2. Now place the valve with the supplied fittings onto the frame (fig. 22).
3. Install the cylinder. Ensure that the gates close neatly when the cylinder is fully retracted. This can be adjusted by rotating the clevis. Secure it with the nut behind it (fig. 23).

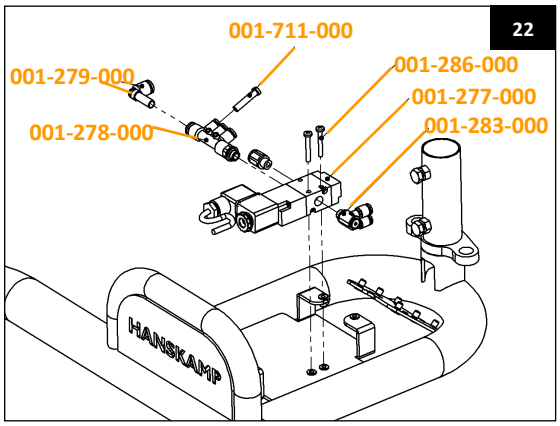

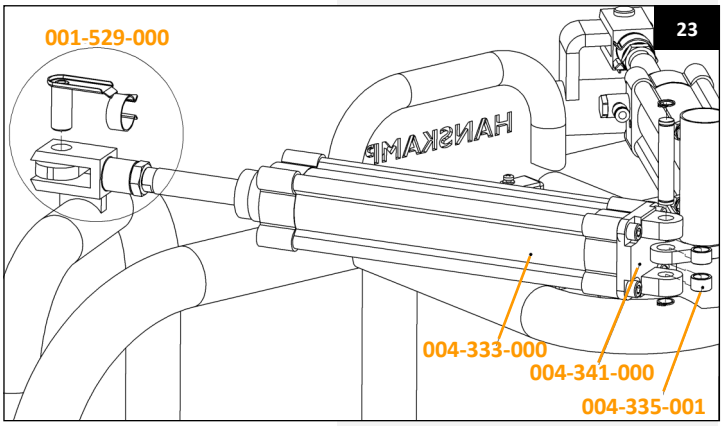

4. Connect the cylinders to the valve using the Ø6 PU air hose (art. no. 001-388-000) (fig. 24).

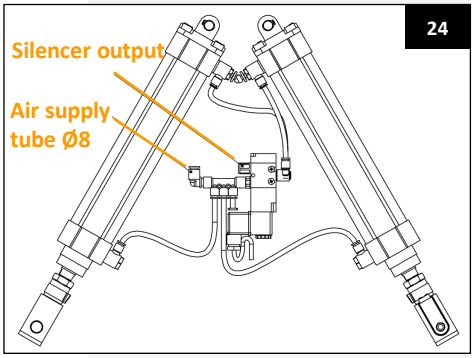

Caution! Ensure that the air hose is of sufficient length so that it cannot be pinched.

5. Mount the cable conduit tube (art. no. 004-334-000) onto the frame and secure it with two bolts (art. no. 011-141-000) (fig. 25).
6. Run two Ø8 air hoses (art. no. 001-823-000) through the cable conduit tube to the valve. Connect one hose to the 'air supply' outlet and the other to the 'silencer output' (fig. 24).
7. Mount the silencer (art. no. 001-346-000) onto the air hose connected to the 'silencer output' using the push-fit coupling (art. no. 001-638-000) (fig. 26), and attach it at the top of the cable conduit tube.

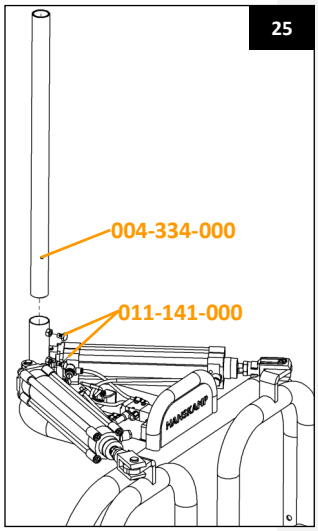

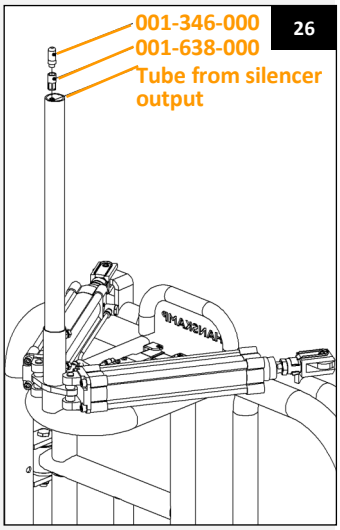

Caution! Route all air hoses out of reach of the cows.

Caution! Only use properly conditioned air (clean and dry). Ensure that there is no air pressure in the hose when connecting the cylinder.

8. Ensure that all air hoses lie neatly flat between the lips of the mounting plate on the frame. Then mount the control box onto the frame using the four supplied bolts (art. no. 001-592-000) (fig. 27).
9. From the underside of the frame, attach the sensor (art. no. 004-338-000) to the mounting plate using M4x30 bolts (art. no. 001-286-000) (fig. 28a). Adjust the sensor according to fig. 28b using the adjustment screw.

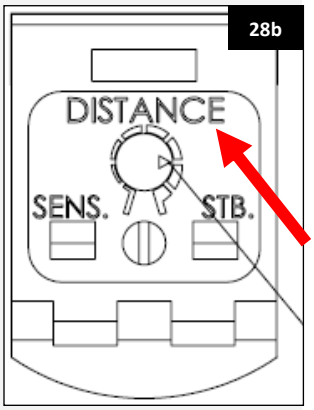

Caution! The sensor shown may differ from the actual sensor supplied. For sensor adjustment, refer to the datasheet: art. no. 010-264-000.

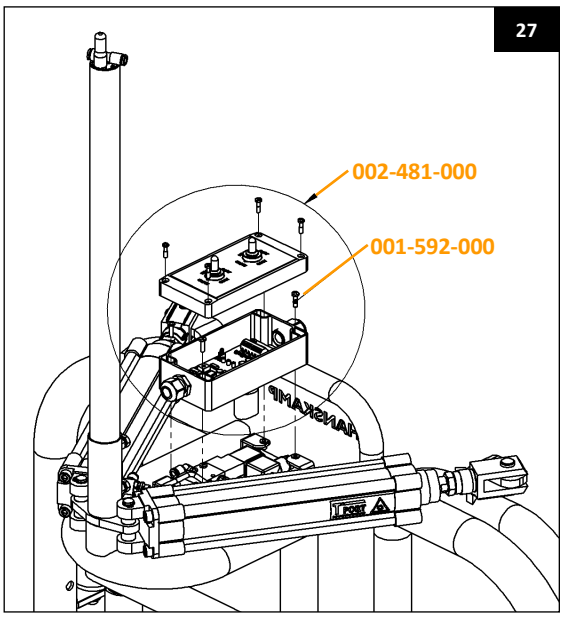

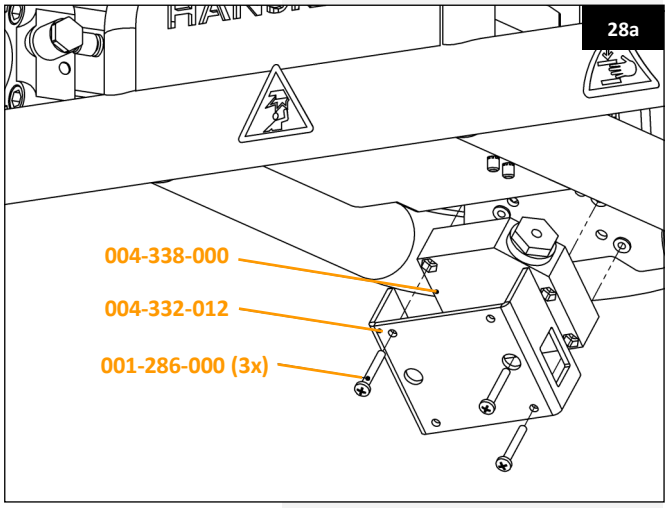

10. Position the complete T'port in front of the FeedStation. Secure the T'port to the FeedStation using the supplied fixing materials and then attach it to the frame. If necessary, drill Ø11 mm holes at the positions indicated in figure 29. Own fixing materials must be used for securing it to the frame (not supplied).

Caution! Ensure that the gates (art. no. 004-331-000) of the T'port have sufficient freedom of movement for the FeedStation, and that the cow has enough space to exit safely.

29

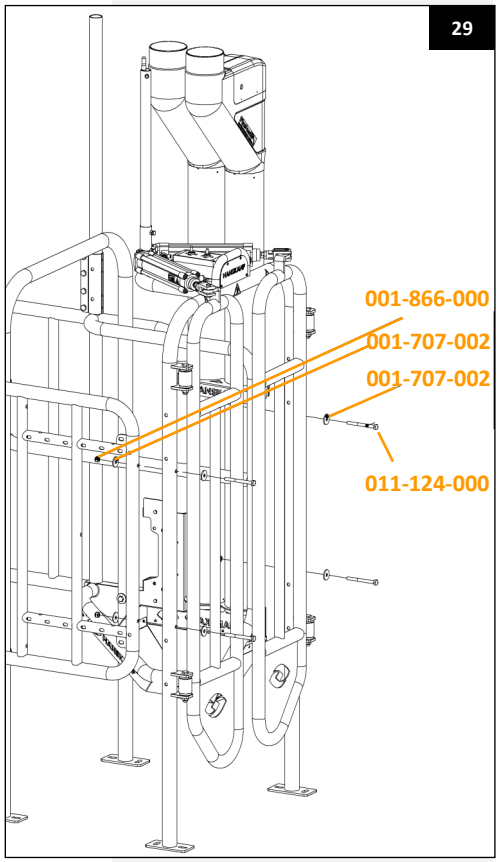

Electrical connection

Connect the supplied cable (art. no. 001-593-000) according to the wiring diagram (fig. 30). The control board must be supplied with 24 VDC or 24 VAC. Maximum power consumption is 5 W. Inputs IN1, IN2, and IN3 can be connected in parallel to the feed motors of the feed types. The inputs operate on 12–24 VDC/AC. The power supply and inputs are galvanically isolated on the board. In the event of a power failure, the L'port and T'port will open automatically.

If no 24 V supply is available, order the Hanskamp PowerUnit 10A 24V DC (art. no. 002-812-000). Connect the cable (art. no. 001-100-000), mounted on the coil of the L'port, to the control board as shown in fig. 30. Ensure that all cables are routed through the cable conduit tube and protected at the top with a protective sleeve (not supplied).

Caution! Route the control cable out of reach of cows.

30

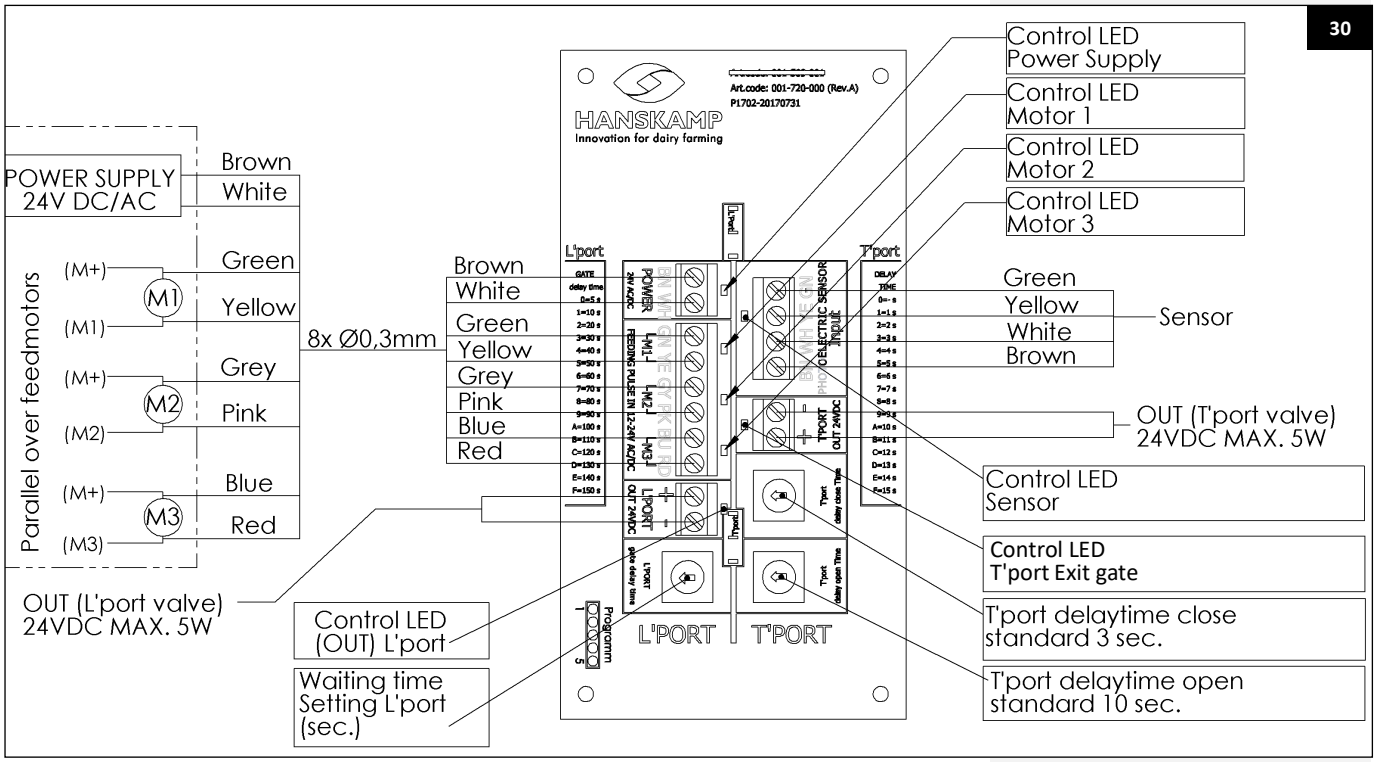

Connecting the air supply

Connect the air supply to the 'air supply' Ø8 air hose. Route the Ø8 air hose upwards through the cable conduit tube (art. no. 004-334-000) and install a T-connector (art. no. 001 -294-000) at the top. Connect the Ø8 air hose from the L'port and the air supply (compressor) to this T-connector. Recommended air pressure: 6-8 bar. The maximum length of the supply hose is 75 m. (See **www.hanskamp.com** for compressed air guidelines.)

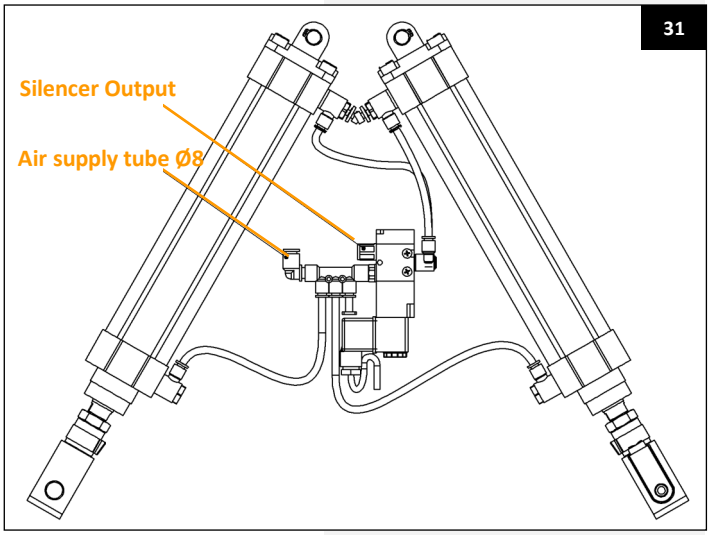

Caution! Route the air hose out of reach of cows.

Caution! Ensure the air is properly conditioned (clean and dry).

Caution! Ensure there is no air pressure in the system when connecting the cylinder.

Operation

Using the 3-position switch (figs. 32b and 32c), you can select T'port/L'port Open (Open), T'port/L'port Closed (Close), or Automatic (Auto). In Automatic mode, the L'port closes as soon as a feed motor is activated. The T'port remains closed and opens when a cow is detected that has no feed allowance, or after the delay time following the last feed pulse. The L'port also opens after the delay time. This delay time is set using the 14-position switch (time setting in seconds) (fig. 30). The delay time must be longer than the total interval time of the feed types used.
Recommended setting: interval time + 25 seconds.

Settings overview

For the brands DeLaval, Fullwood, Insentec, Hokofarm, and Gascoigne Melotte, set the delay time to 40 seconds (position 4). At Nedap VC control: add 25 seconds to the interval time of the feed types used. For example: one feed type corresponds to 40 seconds (setting 4), and two feed types to 60 seconds (setting 6, rounded down), etc.

Brand/System	Recommended setting
DeLaval, Fullwood, Insentec, Hokofarm, and Gascoigne Melotte	Set time to 40 seconds (setting 4)
Nedap VC control	Interval time + 25 seconds: 1 feed type: 40 seconds (setting 4) 2 feed types: 60 seconds (setting 6, rounded down), etc.

Explanation of the delay time selector switch

0 = 05 sec.	A = 100 sec.
1 = 10 sec.	B = 110 sec.
2 = 20 sec.	C = 120 sec.
3 = 30 sec.	D = 130 sec.
4 = 40 sec.	E = 140 sec.
5 = 50 sec.	F = 150 sec.
6 = 60 sec.	
7 = 70 sec.	
8 = 80 sec.	
9 = 90 sec.	

Adjusting the T'port sensor delay

The sensor on the T'port detects when an animal without feed allowance enters the FeedStation. The T'port opens or closes after an adjustable delay time. These delays can be set using the rotary knobs 'delay close time' and 'delay open time'. See the bottom right of figure 30.
Recommended settings:

Delay close time: 3 (= 3 seconds)
Delay open time: 10 (= 10 seconds)

Adjustment

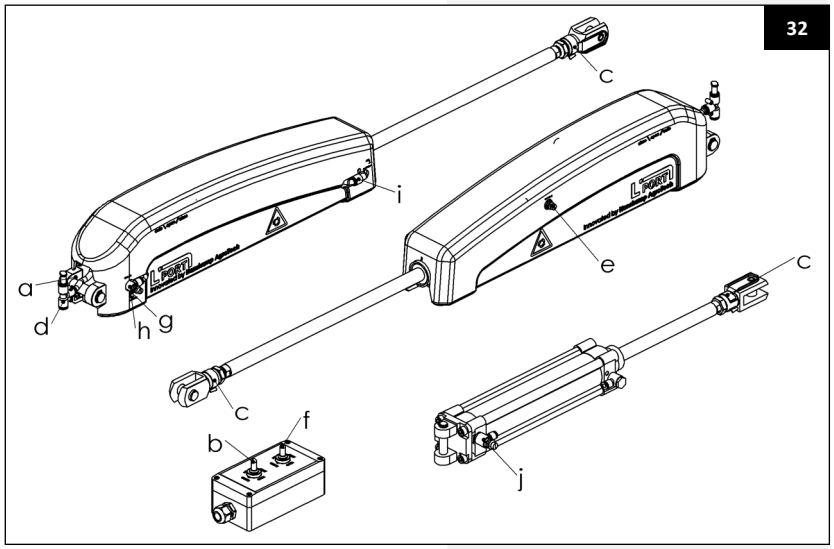

1. Adjust the cylinder rod length using the adjustment option on the fork (fig. 32c) so that the cylinder continues to apply pressure to the anti-jump gate in the lower position.
2. Using the adjustment labelled ‘Speed in’ on the cover (figs. 32g and j), the inward speed of the cylinder can be adjusted. Ensure that the L'port moves from the lower to the upper position in approximately 3 seconds.
3. The same applies to the adjustment labelled ‘Speed out’ (fig. 32e), but in this case the movement time should be approximately 5 seconds.
4. The adjustments labelled ‘Cushioning’ (fig. 32h) control the cylinder’s end damping. Use a 2.5 mm Allen key so that the L'port closing gate stops smoothly.

Caution If the above adjustment steps are not performed correctly, the service life of the L'port may be drastically reduced.

Danger! Check that the air lines are properly connected and not pinched before applying pressure. Incorrect connection can increase the cylinder’s output force, creating a serious risk of entrapment.

Start-up

After installation: keep the L’port closing gate open for one week by setting switch (f) to ‘Open’, and keep the front gate closed for one week by setting switch (b) to ‘Close’, to allow the cows to become accustomed to the new installation. After this period, the system can be put into operation by setting the switch (fig. 32b and f) to ‘Auto’. The noise level will always be equal to or lower than 70 dB(A).

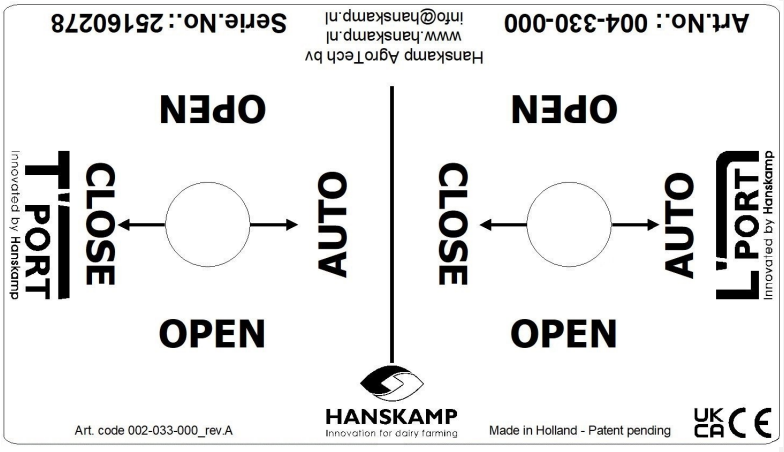

Warning

Caution! Risk of entrapment.
Caution! L'port starts automatically.
Caution! Risk of impact when entering the FeedStation.

Installing PipeFeeders

1. Place the PipeFeeders in the crescent-shaped markings laser-etched on the top of the feed trough. This ensures that the PipeFeeder is correctly aligned.
2. Secure the PipeFeeders using the supplied suspension bracket (art. no. 004-314-000) and fasten it with two M8x20 bolts and two M8 washers (art. no. 004-210-000 and 004-211-000) into the designated press-in nuts. See the insert for multiple feed types.

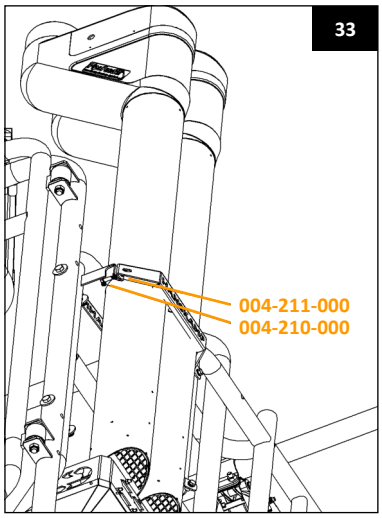

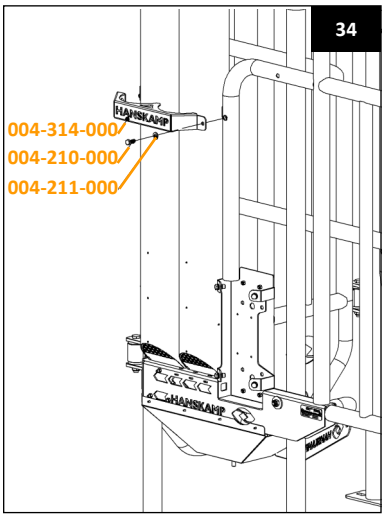

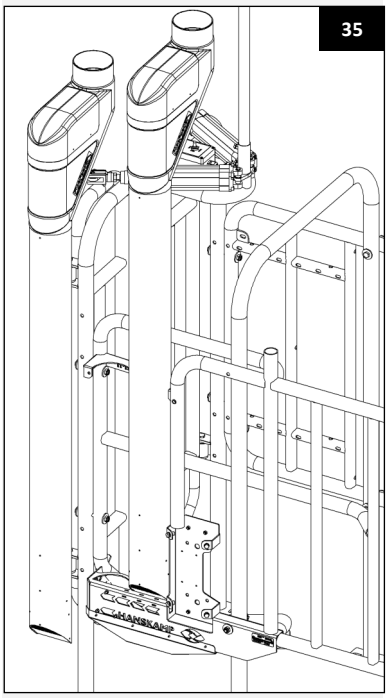

3. Next, place the cable conduit tube (art. no. 004-329-000) on the feed gate (art. no. 004-303-000) using the supplied coupling clamp (art. no. 011-086-000) (fig. 26).
4. Feed the cables from the PipeFeeder and the T'port through the cable conduit tube downwards, and route them through the U-shaped guide to the control PCB.

Caution! Ensure the cables run neatly and tightly towards the cable conduit tube so that no cow can reach them.

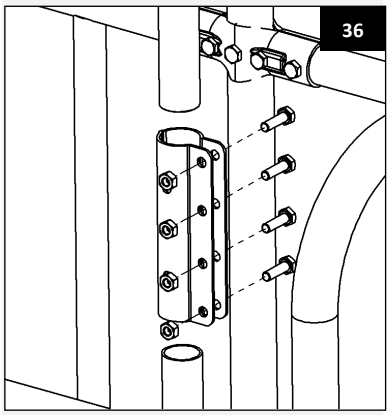

No.	Art. no.	Description
1	004-260-000	Mounting bracket
2	227-xxx-xxx	PipeFeeder
3	011-161-000	Protective plate
4	002-053-000	Stainless steel drop tube
5	002-67x-xxx	Black-V
6	002-055-100	Container 28 l with bracket
7		
8	002-105-000	Black-V mounting set on FS
9		
10		

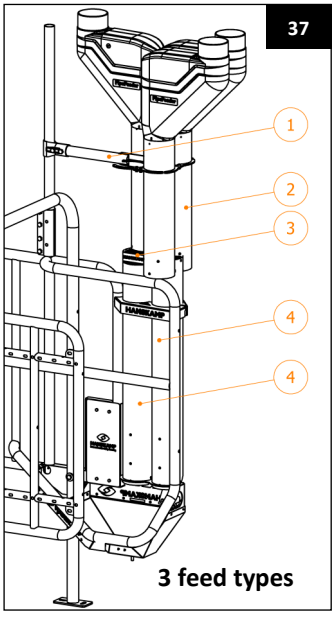

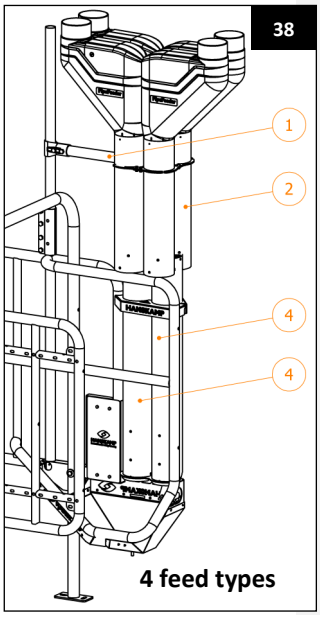

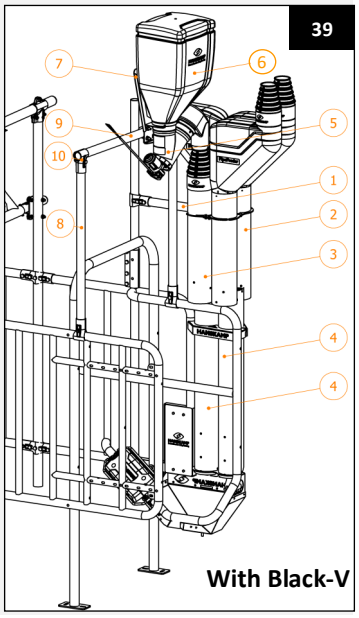

Caution! Clean the feed trough regularly. Make sure that no feed residues remain between the PipeFeeder and the feed trough. Ensure that no water enters the PipeFeeder, as this may impair its operation.



Mount the relevant electronics on the feeding station and connect the PipeFeeders to them. The mounting plate of the feed barrier is already equipped with holes for various brands and types of transmitters, receivers, and controllers.

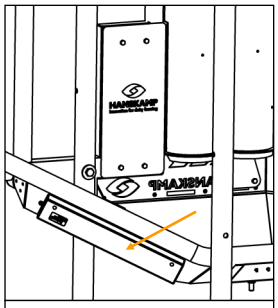

DeLaval reader cover plate art. no. 004-315-000

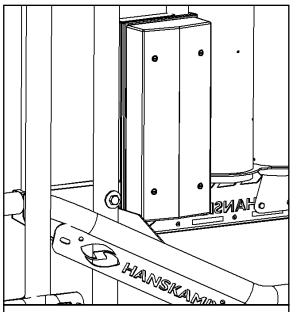

Nedap VC3/VC4

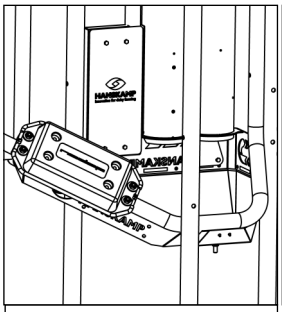

Velos/VC5

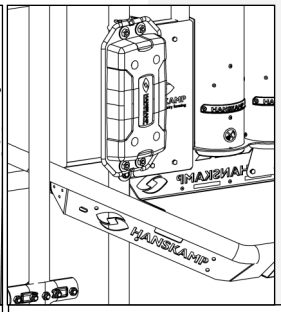

Hanskamp ear tag transponder

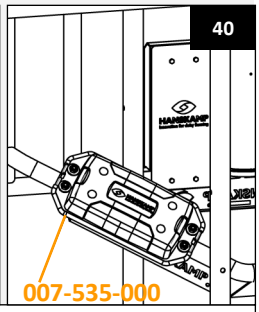

Hanskamp neck collar transponder

Caution! Ensure that the PipeFeeders are correctly adjusted so that they do not spill feed when a cow bumps into them (see manual 001-847-000 PipeFeeder).
Caution! Always use a cable duct or protective conduit to protect cables and pipes from external mechanical damage.
Caution! Always route cables out of reach of cows.
Caution! Ensure that the electronics and the feeding station are properly earthed.
Caution! Calibrate the PipeFeeder feed dispenser before use. Repeat this monthly or whenever the type of feed is changed.
Caution! Due to the risk of falling, do not climb on the feeding station.

FeedStation Walk-Through coupling

Multiple FeedStations can easily be installed next to each other. This requires only a single intermediate barrier, allowing multiple components to be saved. Thanks to the modular design, mirrored layouts or configurations with three FeedStations side by side are also possible.

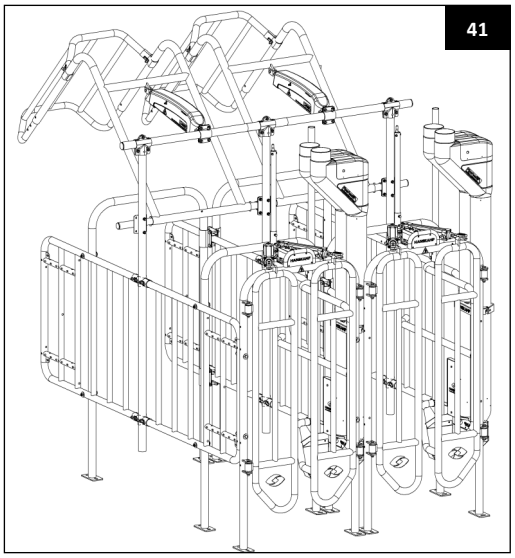

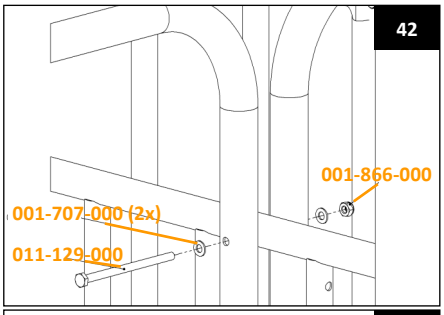

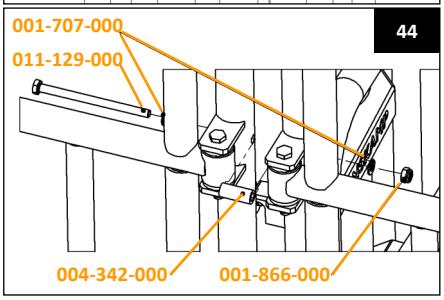

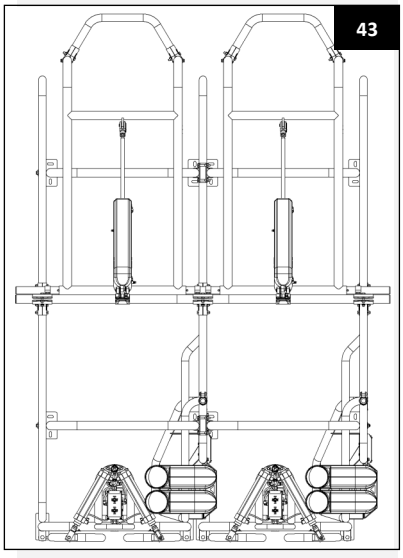

Caution! Ensure that the person operating the T'port or L'port closing gate is always positioned in a safe location. When the T'port and L'port closing gates are in operation, no persons may be present near the FeedStation, and it is not permitted to climb on the gate.

Maintenance

Check the FeedStation Walk-Through daily for malfunctions, contamination, and wear. Do this by testing the outputs of the feed motors and using the manual switches on the T'port. Ensure that abnormal noises and vibrations caused by the operation of the L'port closing gate are minimised as much as possible, for example by fitting a grease nipple and applying lubricant.

Dismantling

During dismantling, all components must be separated by material type and disposed of via the appropriate waste processing streams.

Caution! During maintenance and dismantling, always switch off the compressed air supply and the electrical power supply to the FeedStation before starting work.

Overview of changes included in these installation and operating instructions

No.	Release date	Chapter(s)	Comments
1	03/2015	All	First draft (2x L'port)
2.0	08/2016	All	Update to T'port + L'port
2.1	10/2016	T'port	Protection plate for photoelectric sensor T'port
2.2	11/2017	All	Right-hand model FeedStation removed
2.3	03/2018	All	Figures updated in accordance with new PCB layout
2.4	01/2019	Sensor adjustment	Delay open time changed from 6 to 10 seconds
2.5	01/2023	Pages 7, 16	UKCA logo added
2.6	05/2023	Pages 20	Added: additional options
2.7	04/2024	Pages 7, 23	Page 7: type plate illustration removed. Page 23: appendix 2 (exploded view) replaced
2.8	12/2025	Pages 1, 29	Page 1: place name updated. Page 29: Hanskamp address updated
2.9	12/2025	Pages 13, 17, 18, 20	Page 13: sensor adjustment image updated. Page 17: installation for multiple feed types added. Page 18: collar recognition installation added. Page 20: reed contacts added
3.0	05/2026	Page 18	Image of ear recognition assembly on FS-WT replaced

Warranty limitations

The warranty excludes costs and expenses resulting from:

- Incorrect use of the equipment, not in accordance with the specifications in the installation and operating instructions.
- Interventions by technicians other than those approved by Hanskamp to carry out specific activities.
- Incidents such as frost, ice, fire, flooding, inundation, any other form of extreme water damage, and lightning strike.
- Failure of the electrical system or earthing.
- Damage to the electrical system caused by vermin or similar.
- Incorrect use of compressed air that does not comply with the compressed air requirements specified by Hanskamp in cooperation with suppliers, resulting in malfunction of the pneumatic systems. These compressed air requirements can be found at **www.hanskamp.com**.

The warranty does not apply to consequential damage that does not relate to the machine itself. All systems have been tested; however, in the event of malfunctions, Hanskamp cannot be held responsible for any consequential damage.

Additional options

Components for 3 - 4 feed types

002-053-000 Stainless steel drop tube Ø129×2 mm, L = 990 mm, including safety plate and 90° pressure plate
004-260-000 Mounting kit, galvanized, including T-clamp and fasteners
004-247-000 Housing for mounting unit, for installation of control boxes
004-221-000 Plastic protective plates
004-355-000 Set of reed switches to prevent accidental feed dragging (Spider & CT)

Extended version: extension without T'port, with anti-return gates
044-000-002: FeedStation Walk-Through Extended

002-053-000	004-260-000	004-247-000	004-355-000
			



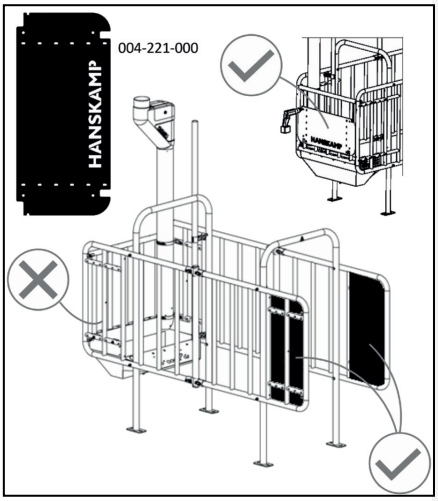

Copyright and Disclaimer
The information in this publication is provided for informational purposes only and does not constitute a sales offer. Products shown may differ from the illustrations. References to brands and/or products in this manual are for identification purposes only. The company and product names mentioned in this manual are trademarks of their respective owners. Nothing in this publication may be reproduced or made public without the prior written consent of Hanskamp AgroTech BV. Although this publication has been compiled with the utmost care, Hanskamp AgroTech BV is not liable for any damage that may result from errors or omissions in this publication. The Dutch installation and operating instructions are the original installation and operating instructions. Translations into other languages are based on the Dutch version as the source document. Hanskamp AgroTech BV accepts no liability for discrepancies between translations. In case of any doubt regarding the content or accuracy of the translated installation and operating instructions, the Dutch installation and operating instructions shall be considered the authoritative document.

FAQ

Common problem	Possible cause	Solution
Cow positioned incorrectly in the FeedStation Walk-Through.	The cow's neck collar is not fitted correctly. The T'port is set to 'Open'.	Ensure that the transponder is positioned on the side of the cow so that it can only be detected from one side.
L'port closing gate		
Installation complete, gate does not open, valve switches correctly.	Speed controllers are fully closed.	Open the speed controllers.
Closing gate squeaks at hinge tube.	No grease/lubrication between hinge tube and moving element.	Install a grease nipple and apply lubricant.
Cylinder moves jerkily in or out.	Lateral force on piston rod.	Disconnect the fork from the moving element.
		Refit clamp 004-045-000 so that the fork can connect freely to the moving element.
Gate does not close, indicator light on.	Signal cable incorrectly connected.	Check that the signal cable is correctly connected.
	No power to PCB.	Check connections and power supply.
	Incorrect power supply.	Verify that the PCB is connected to 24 V AC or DC (gate will not operate at 12 V).
	Cable broken.	Replace the cable and remove the damaged one.
Gate opens immediately after feeding.	Delay time set incorrectly.	Adjust the delay time correctly.
PipeFeeder		
No feed pellets fall.	No pellets in the supply tube.	Check the auger and silo.
	Motor is not activated. Check by removing the flap from the motor and inspecting the LEDs on the control PCB .	Check power supply and control signal (voltage).
	Rotor is not turning. Connection between rotor and motor via coupling is missing.	Remove the motor from the rotor and reinstall it (ensure correct anti-spill adjustment).
	Blockage, e.g., wood or plastic.	Remove the PipeFeeder from the wall and empty it; the rotor should turn freely by hand when empty.
PipeFeeder is not anti-spill.	Check whether you have an anti-spill version of the PipeFeeder.	For AC with DosPrint: check settings/function. For correct settings, download the manual from the website.
	PipeFeeder not correctly adjusted.	For DC, see page 10, step 7 of the PipeFeeder manual.
PipeFeeder does not dispense correct amount.	Incorrect calibration.	Calibrate the control unit.

Appendix 1 Dimensions

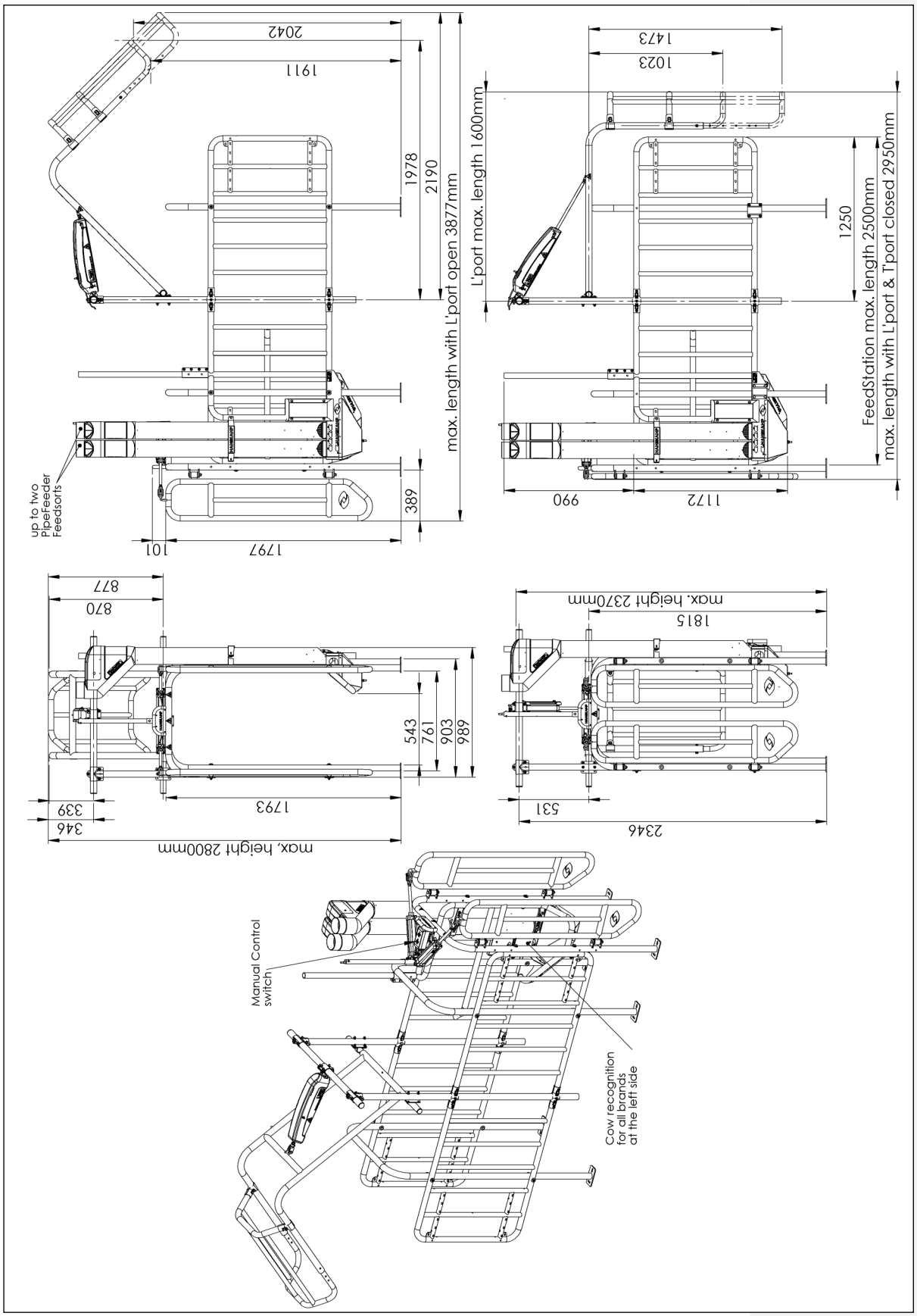

Appendix 2 Spare components

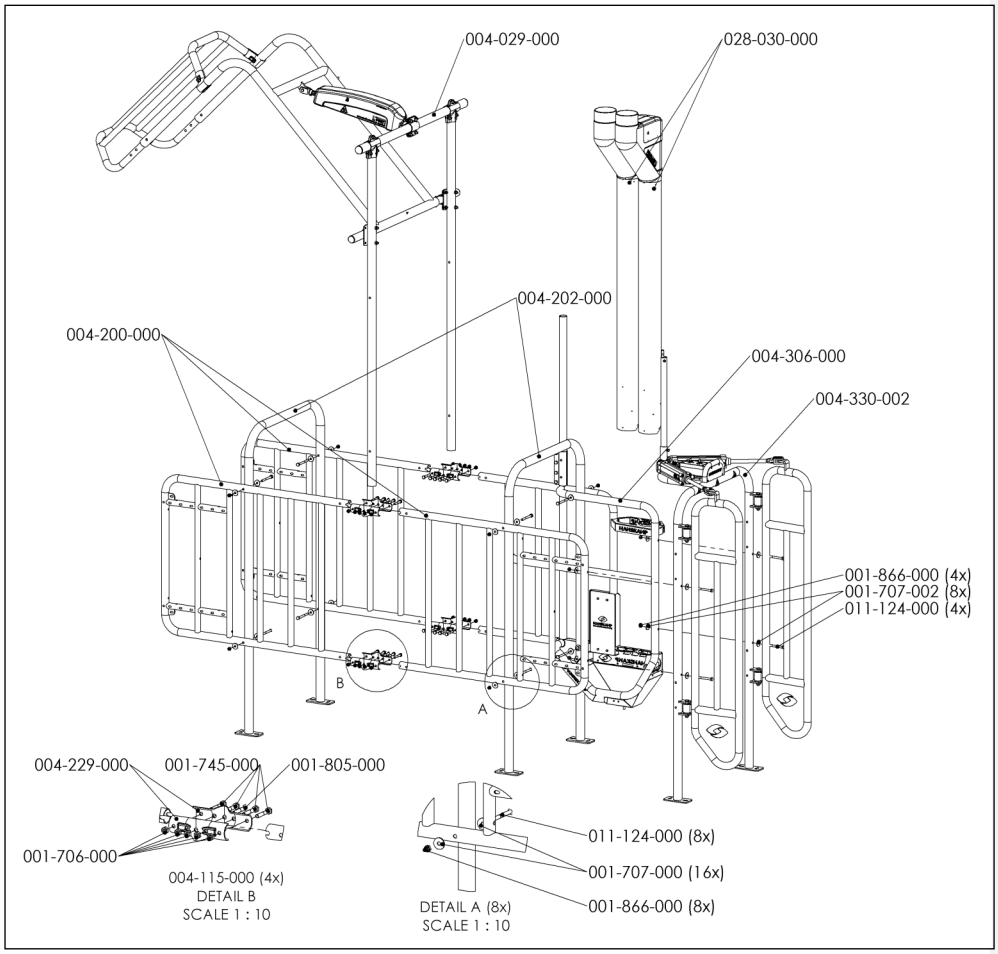

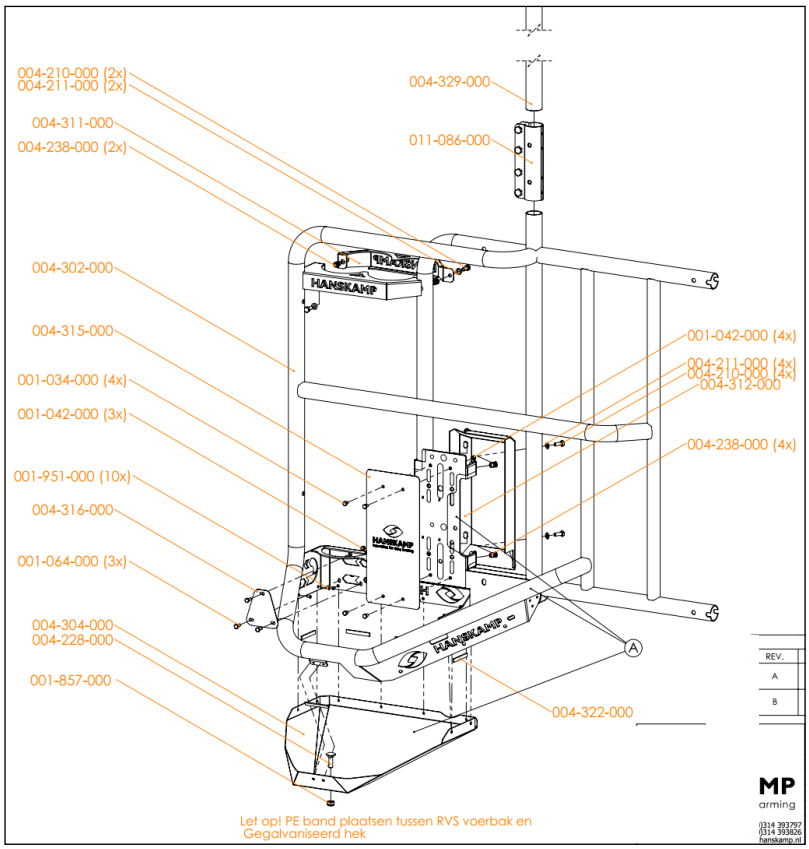

Appendix 3 Description of components in appendix 2 - FeedStation Walk-Through

Article number	Description	Quantity
028-030-000	PipeFeeder long 35 g	1
004-029-000	L'port closing gate, universal	1
004-200-000	Side fence FS, complete	3
004-115-000	Double T-clamp, complete	4
004-202-000	FS frame, complete	2
004-306-000	Feeding fence left, complete	1
004-330-002	T'port (front)	1

004-321-000 Set mounting materials FeedStation Walk-Through

Article number	Description	Quantity
001-707-000	Washer M10 DIN 125 8.8, electro-galvanized	16
001-707-002	Curved washer M10×34×3 DIN 440 8.8, electro-galvanised	8
001-866-000	Lock nut M10 DIN 985 8.8, electro-galvanized	12
011-124-000	Bolt M10×105 DIN 931 8.8, electro-galvanized	12

Parts 004-306-000 Feed gate FeedStation Walk-Through, left

Article number	Description	Quantity
001-707-001	Washer M10×34×3, electro-galvanized	2
001-866-000	Self-locking nut M10 A2	1
004-238-000	Blind rivet M8, flange head 1.5-4.5 mm	6
004-303-000	Side fence FS-WT, left, including feed trough	1
004-313-000	Left Z/O protective plate for FS-WT	1
004-314-000	PipeFeeder mounting bracket, left, for FS-WT	1
004-315-000	Antenna cover plate FS-WT 1 mm	1
004-316-000	Hose protective plate for MD in FS-WT	1
004-322-000	PE tape 9/3 white, self-adhesive, 750 cm	0.05
004-329-000	Cable entry tube FS-WT 1¼" (42.4×2.6 mm)	1
011-086-000	Heavy-duty connecting clamp	1
011-148-000	Tap bolt M10×110, electro-galvanized	1

Appendix 4 L'port

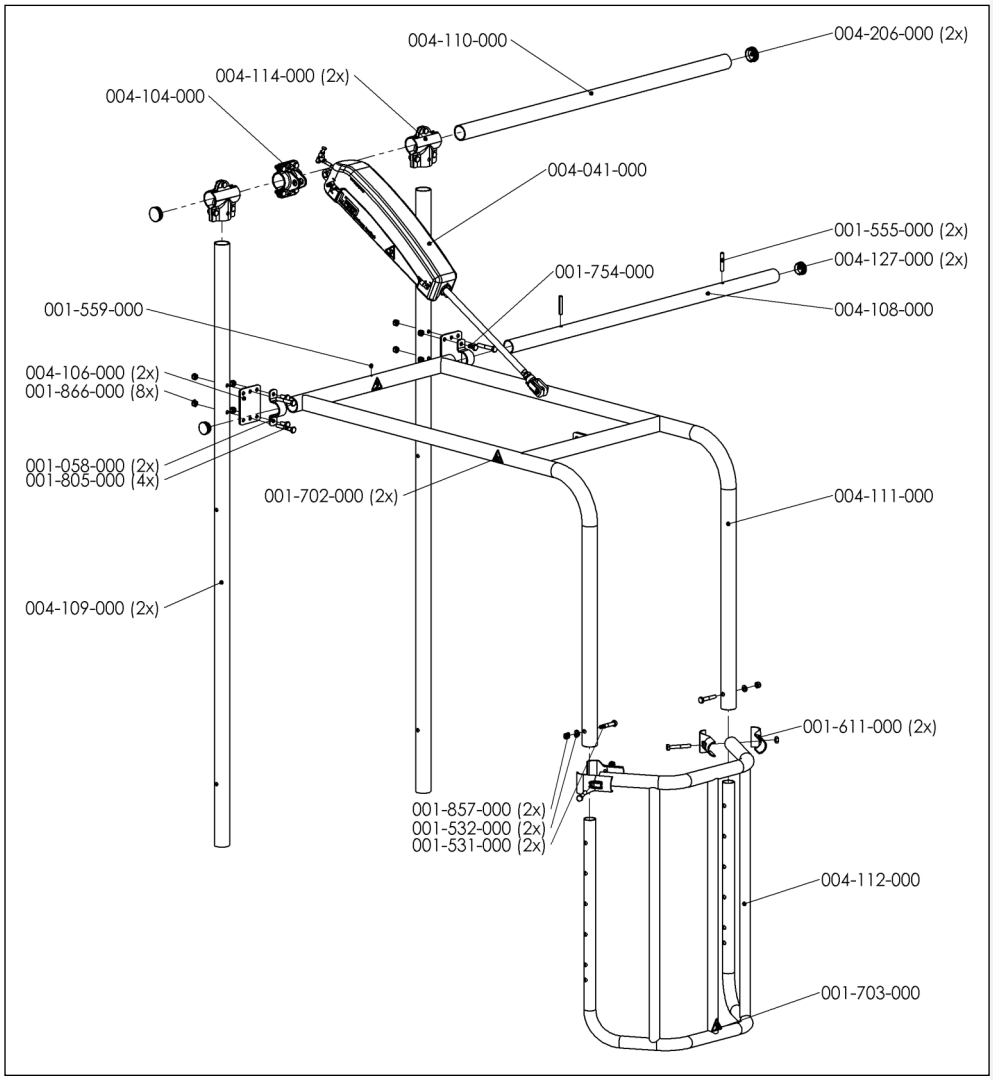

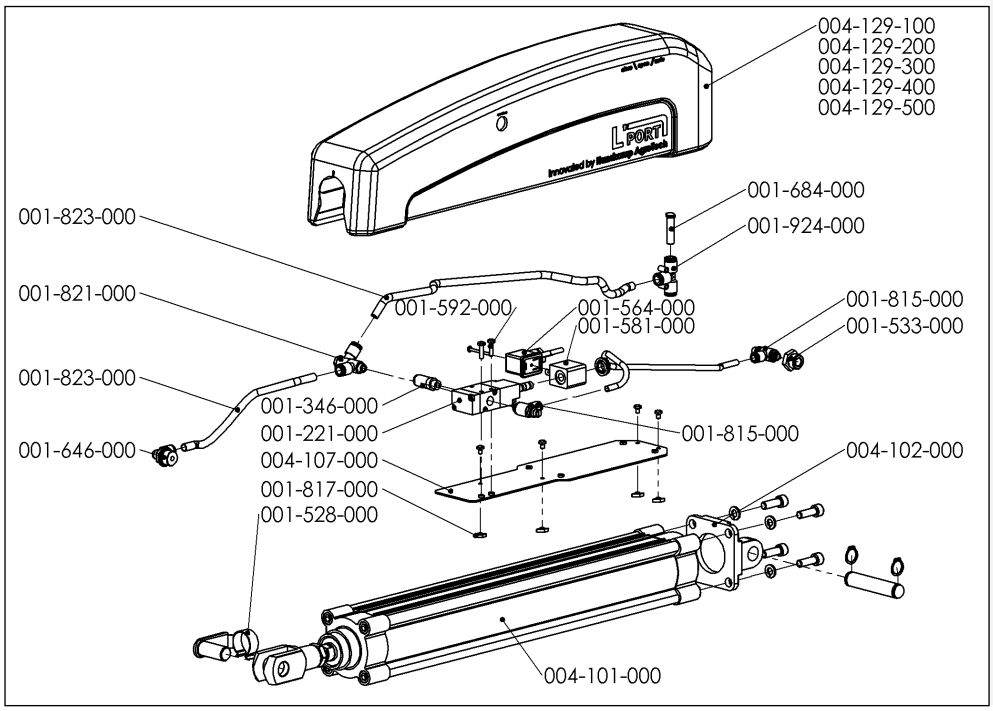

Appendix 5 Description of the components L'port

004-029-000 Components for L'port closing gate, universal, without control unit

Article number	Description	Quantity
004-108-000	Hinge tube LP 1¼"×2.6, L= 1190 mm	1
004-109-000	Standing leg tube LP 1½”x3.25 L = 1976 mm	2
004-110-000	Cylinder support tube LP 1½"×2.6, L = 1190 mm	1
004-111-000	Moving element LP	1
004-112-000	Extension element LP, universal	1

004-052-000 Components box L'port universal, without control unit

Article number	Description	Quantity
001-058-000	Complete top clamp 1¼", hot-dip galvanised	2
001-100-000	Connection cable LiYY 2×0.5 mm, 2.75 m	1
001-531-000	Bolt M10×60 DIN 931, stainless steel A2	2
001-532-000	Washer M10 DIN 125, A2	2
001-555-000	Tension pin 10×60, heavy-duty	2
001-559-000	Grease nipple M6×1	1
001-582-000	Connection cap for coil	1
001-611-000	T-clamp 2-piece 1½"×1¼", including 1× M10×70 bolt	2
001-702-000	Warning sticker: hand entrapment	2
001-703-000	Warning sticker: impact hazard	1
001-754-000	Hex bolt M10×20 DIN 933 8.8, electro-galvanised	4
001-755-000	Warning sticker: automatic start	2
001-805-000	Bolt M10×70 DIN 931 8.8, electro-galvanised	4
001-822-000	Metal screw M4×25 DIN 7985, A2	2
001-857-000	Self-locking nut M10 A2 DIN 985, coated	2
001-866-000	Self-locking nut M10 DIN 985 8.8, electro-galvanised	8
001-957-000	Button head cylinder screw M4×8 DIN 7985	4
001-977-000	TAPTITE 2000 M4×6 Torx T20, SFS Intec	4
004-041-000	Cylinder set L'port closing gate	1
004-045-000	Double 4-hole half-shell, complete, hot-dip galvanised	1
004-106-000	Pipe mounting plate LP, galvanised	2
004-107-000	Cylinder mounting plate LP	1
004-114-000	3-hole T-clamp 1½"×1½", galvanised	2
004-127-000	Round insert 1¼" (Ø42.4), grey	2

Article number	Description	Quantity
004-129-100	Cylinder cover LP, black, without control unit	1
004-129-200	Cylinder cover LP, green, without control unit	1
004-129-300	Cylinder cover LP, blue, without control unit	1
004-129-400	Cylinder cover LP, red, without control unit	1
004-129-500	Cylinder cover LP, orange, without control unit	1

Appendix 6 T'port

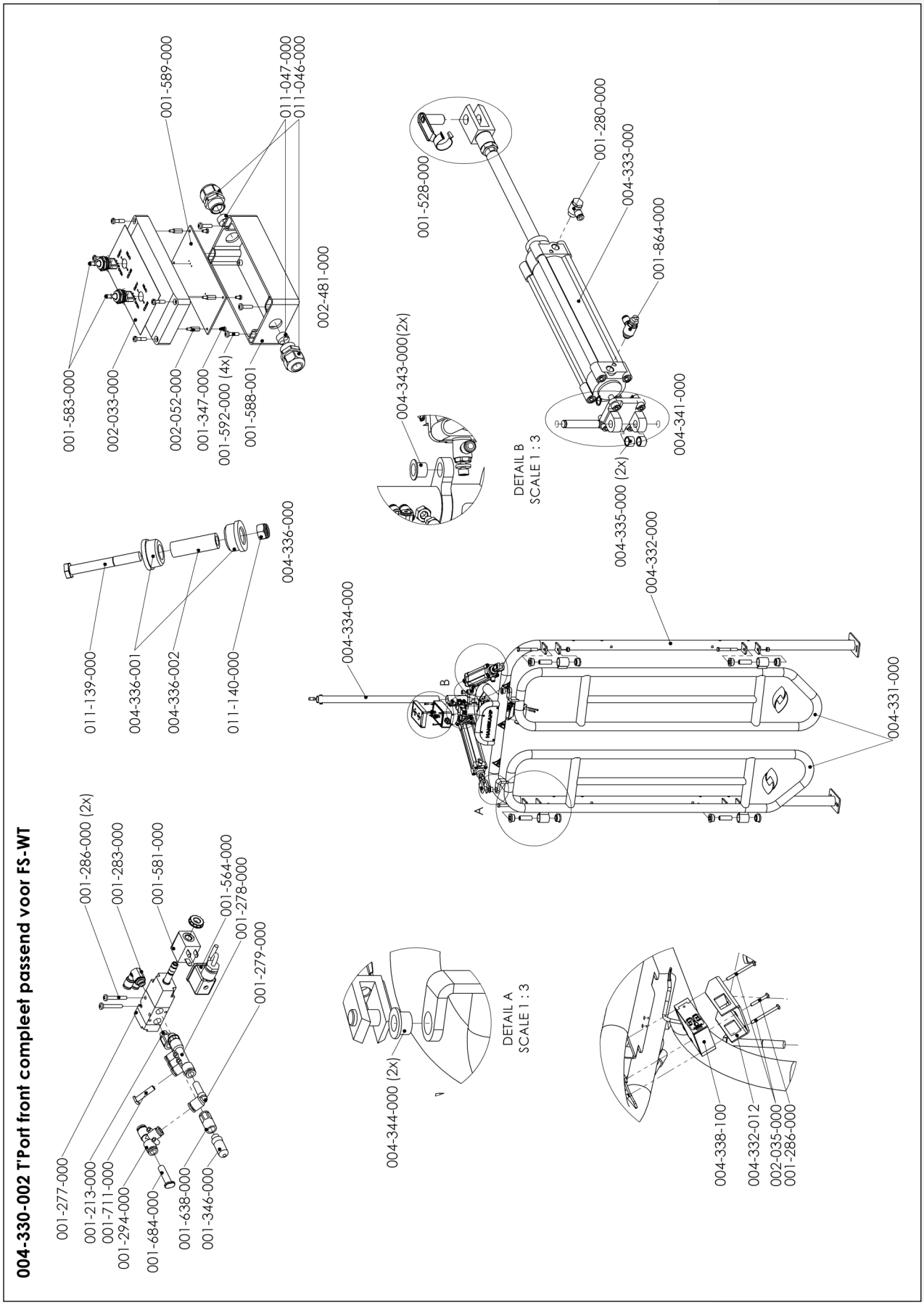

Appendix 7 Description of T'port components

004-330-002 T'port front (FS-WT)

Art. no.	Description	Qty.
002-481-000	Control unit complete T'port, with 2×3-position switch	1
004-331-000	T'port gate, complete	2
004-332-000	T'port frame, complete	1
004-334-000	Cable entry tube 1" (33.7×2.6 mm), L = 600 mm	1
004-336-000	Plain bearing bushing set, including bolt and nut	4
004-337-000	Cylinder set T'port, complete	1
004-338-000	Photoelectric sensor 24 V AC/DC	1
004-332-012	Protective cover for photoelectric sensor T'port	1

Art. no.	Description	Qty.
001-213-000	Straight push-in coupling 1/8" × 8 mm	1
001-277-000	Valve 3/2 1/8" without coil (T'port), normally open	1
001-278-000	Multiple coupling, plastic, straight thread RL45	1
001-279-000	Elbow plug-in coupling, low RL46 Ø8–Ø8 mm	1
001-280-000	Swivel banjo elbow coupling, plastic RL54 Ø6 1/4"	2
001-283-000	Swivel double banjo coupling, plastic Ø6 1/8	1
001-294-000	T-coupling 3×8 mm push-in	1
001-346-000	Silencer, plastic 1/8"	1
001-388-000	Air hose 6×3.9 mm PU, water-resistant, 50 m	0.031
001-528-000	Fork GK M63 closing gate	2
001-564-000	Black plug with moulded cable 2×0.5 mm, L = 20 cm	1
001-581-000	Coil for valve 24 V DC, 2 W	1
001-638-000	Straight push-in coupling 1/8" BI × 8 mm	1
001-684-000	Plug Ø8 mm	1
001-711-000	Plug RL9T Ø6 mm	1
001-823-000	PU hose 8×5.5 mm, water-resistant, 50 m	0.036
001-864-000	Micro flow regulator type C 6-1/4"	2
004-333-000	Cylinder T'port Ø50 mm, stroke 200 mm	2
004-341-000	2-jaw rear hinge for cylinder Ø50 mm	1

004-340-000 Mounting set for T'port (FS-WT)

Art. no.	Description	Qty.
001-286-000	Metal screw M4×30 DIN 7985 8.8, electro-galvanised	3
001-702-000	Warning sticker: hand entrapment	2
001-592-000	Metal screw M4×16 A2, with star head	4
002-035-000	Metal screw M4×50, electro-galvanised	2
004-242-000	Blind rivet M4, flange head	9
004-335-000	Spacer bush nylon 12×16×10	4
004-343-000	Flanged plain bearing for cylinder mounting T'port, rear hinge	2
004-344-000	Flanged plain bearing for cylinder mounting T'port, fork on gate	2
010-260-000	Warning sticker: T'port automatic start	2
011-141-000	Bolt M8×12 DIN 933 8.8, electro-galvanised	2

004-336-000 Plain bearing bushing set, including bolt and nut

Art. no.	Description	Qty.
004-336-001	Plain bearing bushing, suitable for Ø42.4 mm tube	2
004-336-002	Spacer bush Ø20×13, L = 61 mm	1
011-139-000	Bolt M12×95 DIN 931 8.8, electro-galvanised	1
011-140-000	Self-locking nut M12 DIN 985 8.8, electro-galvanised	1

Hanskamp AgroTech BV
Xenonstraat 6
7031 HX Wehl
The Netherlands
Tel: +31 (0)314 - 393 797
www.hanskamp.com

Also take a look at: