DeltaFeeder

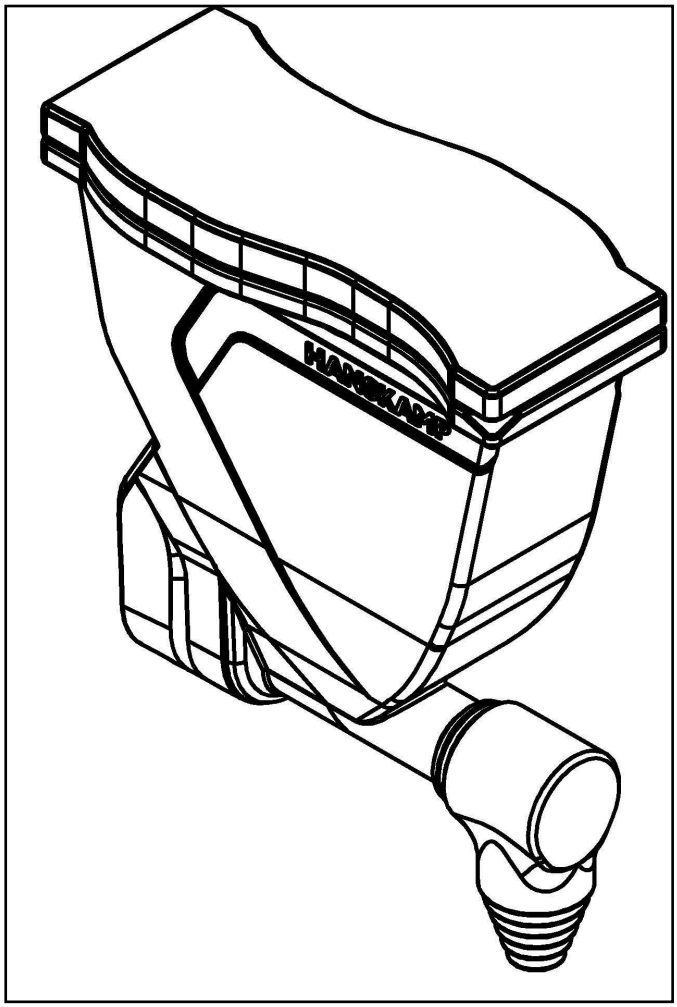

Krachtvoerdosator
Feed dispenser
Kraftfutterdosierer
Doseur d'alimentation

Installation and Operating Instructions **EN**

HANSKAMP
Innovation for dairy farming

Article number: 010-335-001

Date: August 2025
Version 1 - Translation of Original Installation and Operating Instructions
According to Annex 1 Chapter 1.7.4 of the Machinery Directive 2006/42/EC

Doetinchem,
The Netherlands
www.hanskamp.com

Foreword

Contents of the Installation and Operating Instructions

This manual contains all the necessary information to correctly install and operate the DeltaFeeder. Please study this information carefully and ensure that you fully understand it before configuring the DeltaFeeder. Failure to do so may result in damage to the equipment. Please consult your milking equipment dealer if you do not understand the information in this manual, or if you need additional information.

All information in this manual has been compiled with care. Hanskamp accepts no liability for any errors or omissions in this manual. The recommendations are intended as guidelines. All instructions, illustrations and specifications in this manual are based on the most recent information available at the time of publication. Your DeltaFeeder may include improvements, features or options that are not covered in this manual.

Applicability

The table below shows the type numbers of the DeltaFeeder to which this manual applies.

Model designation

Model	Type number
DeltaFeeder 50 grams per rotation	030-000-000
DeltaFeeder 100 grams per rotation	030-000-010
DeltaFeeder 30 grams per rotation	030-000-020

Contact details of your milking technology dealer

We recommend noting down the name, telephone number and email address of your milking technology dealer in the table below. This will ensure that you can easily retrieve the correct contact details when needed.

Name	
Address	
Phone number	
E-mail	

1. Introduction

With the DeltaFeeder from Hanskamp, concentrate feeding in the milking parlour becomes truly successful. Depending on the control system, the DeltaFeeder can automatically dispense small portions of concentrate very precisely throughout the entire milking session. This keeps the animal focused on the feed and ensures they remain calm in the parlour. In addition, oxytocin production is guaranteed. Your benefit? Faster milking with significantly less concentrate.

The FeedStation or your milking robot can also be supplied with or fitted with the innovative DeltaFeeder concentrate dosing system from Hanskamp. This dosing unit allows for extremely accurate dosing. The DeltaFeeder is also equipped with an ingenious anti-spill system. Once the desired amount of feed has been dosed, no more concentrates fall into the feed trough. This prevents cows from bumping into the feeding station, the milking robot or equipment in the milking parlour.

The information in this manual is intended for dairy farmers and technicians.

- Dairy farmers can use the information to test and adjust the DeltaFeeder.
- Technicians can use the information to install and set up the DeltaFeeder.

2. Safety

2.1 Introduction

The 'Safety Warning' symbol warns about important safety messages on your DeltaFeeder and in the manual. Use caution if you see this symbol; it means there is a risk of personal injury or death. Follow the directions of any safety messages.



Safety Warning Symbol

2.2 Warning Texts

Note the use of the warnings **CAUTION** and **DANGER** in the safety messages. The following guidelines apply to these warnings:



Caution! Indicates a potentially hazardous situation which could result in minor personal injury or damage to equipment or the environment if the warning is ignored.



Danger! Indicates a potentially hazardous situation which could result in death or serious injury if ignored.

2.3 Safety Instructions

You are personally responsible for operating and maintaining your DeltaFeeder safely. You must ensure that you, and anyone else who operates the equipment, performs maintenance on the DeltaFeeder or works in the vicinity of the DeltaFeeder, are familiar with all the safety information in this manual.

Safety is in your hands. Proper safety measures protect you and those around you. Incorporate these measures into your safety programme. Ensure that everyone who operates, maintains, or works near the DeltaFeeder is aware of these safety measures. Do not risk injury or death by ignoring safety precautions.

- DeltaFeeder owners must train users before the DeltaFeeder is put into operation. This training must be repeated at least once a year.
- The user must read, understand and follow all the safety and operating instructions in the manual.
- Anyone who has not read and understood all safety and operating instructions must not operate the DeltaFeeder.
- Do not make any modifications to the equipment. Unauthorised modifications may affect operation, affect the service life of the equipment, and/or result in personal injury.
- Only use original spare parts, and make sure that they are fitted by authorised technicians.

2.3.1 General Safety

- Make sure you have read and understood the manual and safety instructions before connecting the power supply to operate or adjust the DeltaFeeder, or before turning it off for maintenance.
- Only trained personnel may operate the DeltaFeeder.
- Install all guards and safety devices before using the DeltaFeeder.
- Wear the appropriate personal protective equipment (PPE).
- Before cleaning or performing any maintenance on the DeltaFeeder, switch off the electrical power to the DeltaFeeder and isolate the power supply.
- Make sure that phone numbers of emergency medical care available in your area are at hand.
- If you have any further questions, please contact your milking technology dealer.
- Review all safety-related topics with all users at least once a year.

2.3.2 Electrical Safety

- Only a qualified electrician may install the DeltaFeeder power supply.
- Ensure that the earthing of the electrical system and all parts of the DeltaFeeder comply with local rules and regulations.
- Replace any damaged electrical cables, cable sheaths, switches and parts immediately.
- Isolate the electrical supply before opening the DeltaFeeder cover and working on the electrical system.

2.3.3 Safety during Installation

- Make sure that you have read and understood the instructions in this manual.
- Check whether the DeltaFeeder has been installed correctly, as described in the manual.

2.3.4 Safe Operation

- Make sure you have read and understood the manual and safety instructions before connecting the power supply to operate or adjust the DeltaFeeder, or before turning it off for maintenance.
- Only trained personnel may operate the DeltaFeeder.
- Before cleaning or performing maintenance on the DeltaFeeder, disconnect the electrical power to the DeltaFeeder.
- Install the cover and other safety devices before putting the DeltaFeeder into operation.
- Keep hands, feet, hair and clothing away from live parts.
- Keep all unauthorised persons, especially small children, away from the DeltaFeeder at all times.
- Before connecting the DeltaFeeder to the power supply, ensure that all components are securely tightened and that all cables and fasteners are in good condition.
- If you have any further questions, please contact your milking technology dealer.

2.3.5 Safety during Maintenance

- Make sure you have read and understood the manual and safety instructions before connecting the power supply to operate or adjust the DeltaFeeder, or before turning it off for maintenance.
- Only trained personnel may service and maintain the DeltaFeeder.
- Before cleaning or servicing the DeltaFeeder, disconnect the electrical power supply to the DeltaFeeder.
- Wear protective clothing and safety glasses when working on the electrical system.
- Ensure that all guards and protective devices are in place when you have finished servicing.

2.3.6 Safety Messages

- This chapter lists the general safety messages. Specific safety messages, where potential hazards may arise if the procedures or instructions are not followed, are included in the appropriate sections of this manual.

3. Installation and Operating Instructions

General Description

The Hanskamp DeltaFeeder is an electric feed dispenser designed for dosing concentrate feed in pellet or crushed form (see fig. 1). The DeltaFeeder is intended for the supply of concentrated feed, linked to the feed computer or used for in parlour feeding. Always read these installation instructions completely and adhere to the safety regulations.

If the DeltaFeeder is controlled by a Hanskamp ControlPanel, please also consult the installation instructions art. no. 010-311-000. This can be requested from the manufacturer if necessary. If the DeltaFeeder is not controlled via the ControlPanel, always refer to the manual of the respective control unit. For order numbers and part names, see the appendix.

Transport and storage

The DeltaFeeder will be transported in a box. When a complete milking parlour feeding installation is shipped, all the boxes will be transported are on a pallet. One pallet can contain a maximum of 20 DeltaFeeders. This pallet is completely sealed and the corners are taped off to prevent damage. The DeltaFeeder will also be stored in this way.

Caution! Always move the pallet using a suitable means of transport (forklift, pallet fork, pump truck, etc.).

Caution! When unpacking the pallet/box, parts may fall from/out of the pallet/box.

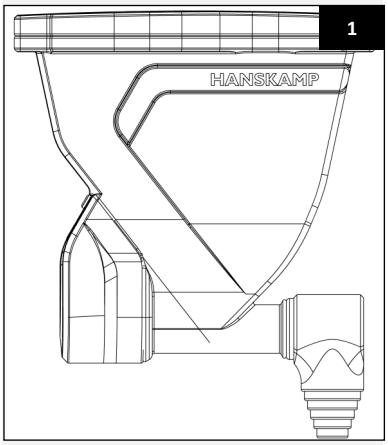

Box contents

1. 1x DeltaFeeder feed dispenser
2. 1x cover for feed hopper
3. 1x cover for motor

Type description: can be found on the back of the motor cover, directly below the grommet.

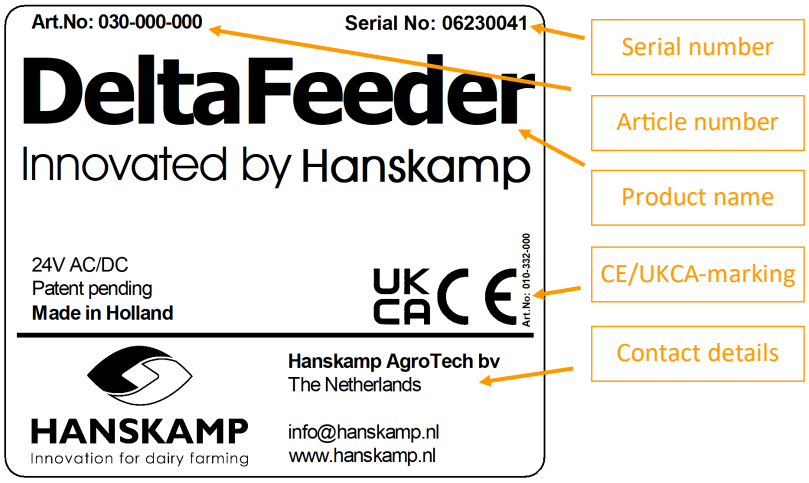

Safety stickers

The user and installer are responsible for the safe operation and maintenance of the DeltaFeeder. Safety stickers are used to ensure safety in and around the DeltaFeeder. These stickers must be placed correctly.

Applying the stickers

- Make sure the surface on which the sticker is to be applied is dry and clean.
- Make sure the surface temperature is at least 5 °C.
- Find the right position for the sticker.
- Remove a small portion of the backing film.
- Place the sticker on the surface and press a small part of the adhesive layer onto the surface.
- Carefully remove the rest of the backing film and apply the rest of the sticker.
- Remove any air bubbles with a needle and use the backing film to smooth out the sticker.

Maintenance of the stickers

- Keep safety stickers clean and legible. Clean the safety stickers with soap and water. Do not use solvents and/or abrasives that may damage the safety stickers.
- Replace missing or illegible safety stickers.

Safety stickers are available from Hanskamp. Always use the article numbers when corresponding.



001-702-000 Warning sticker
Risk of hand entrapment between the auger with outfall cup and the feed hopper.



001-755-000 Warning sticker
The DeltaFeeder can start automatically.

Installation

1. First, determine where the DeltaFeeder should be mounted and at what height. The DeltaFeeder can easily be mounted on a wall using the mounting brackets (art. no. 001-795-000 or 001-151-025). It is also possible to place the DeltaFeeder in a frame (see figure 3).
2. Before mounting the stainless steel bolts and nuts, lubricate them with an adequate amount of copper grease.
3. The outfall funnel can be dismantled by turning it 90° and then sliding it off the outfall cup.

Caution! Mounting material to attach the DeltaFeeder to the wall or onto the feeding station is not included.

Caution! Always mount the DeltaFeeder out of reach of animals. If this is not possible, provide a protective cover for the DeltaFeeder.

2

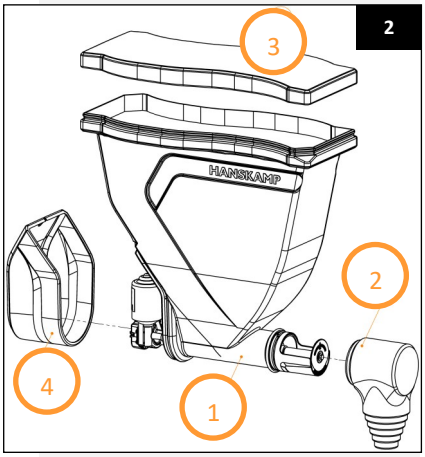

No.	Description	Article number
1	Feed hopper	003-001-000
2	Outfall funnel	
3	Hopper cover	
4	Motor cover	003-003-000

3

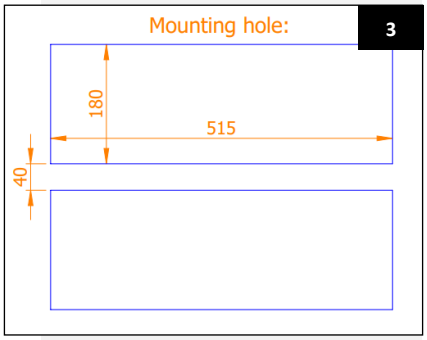

Mounting option 1

Flat against the wall using mounting bracket 001-795-000 or 001-151-025 (see fig. 12).

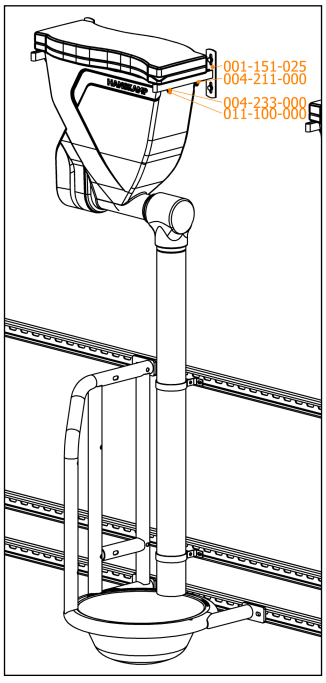

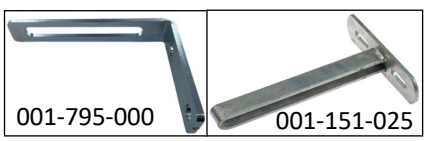

Mounting option 2

Perpendicular to the wall using two long tubes or rails (fig. 13).

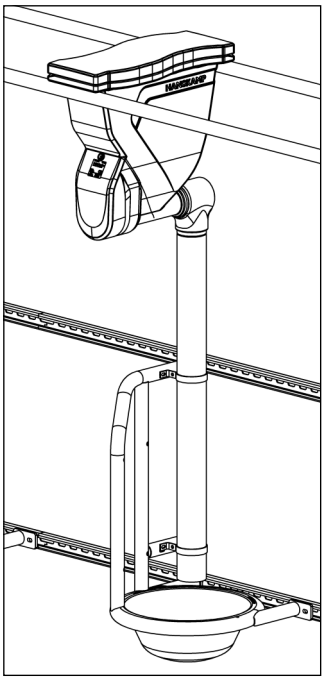

4. If the distance between the feed trough and the dosing system is too far apart, we recommend using a downpipe and mounting it directly under the outfall funnel. Make sure the outfall funnel is cut to size one size smaller than the downpipe (fig. 4). Position the downpipe in such a way that the outfall funnel can still be unscrewed and removed. Always mount the downpipe slightly above the feed trough so that sufficient air can flow through. Hanskamp does not supply downpipes. Examples of installation can be found at www.hanskamp.com.

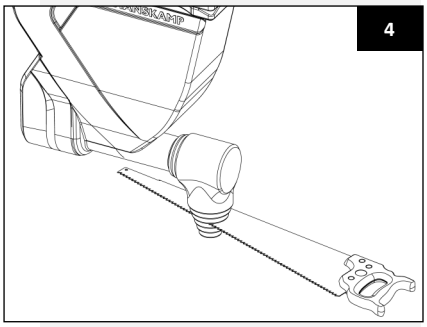

Caution! Always leave approximately 3 cm of space between the bottom of the downpipe and the top of the feed trough. This allows air to flow underneath the downpipe.

5. Use a well-shielded electrical cable to connect the doser. The motor rotates anti-clockwise by default. Feed the cable through the motor cover of the DeltaFeeder using the supplied membrane grommet (art. no. 001-947-000) (fig. 5).

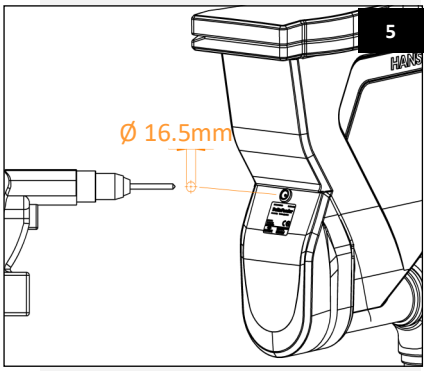

Caution! Always disconnect the electrical power from the control unit before installation.

Caution! Make sure there is always a plug or lockable switch placed between the DeltaFeeder and the power supply that allows the DeltaFeeder to be disconnected from the power supply.

6. Make a solid and tight connection to the feed auger. To do this, drill a hole, the same size as the supply tube coming from the auger, in the DeltaFeeder hopper cover. Make sure that no water, moisture or dirt can get into the DeltaFeeder feed hopper (fig. 6).

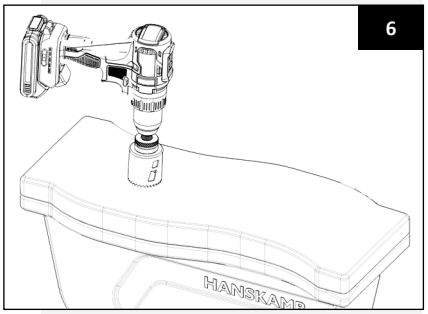

Caution! Insufficient sealing with the feed auger can cause problems that will affect the operation of the DeltaFeeder.

7. Secure the DeltaFeeder hopper cover and the DeltaFeeder motor cover with screws (art. no. 001-955-000) in the designated places (fig. 7).

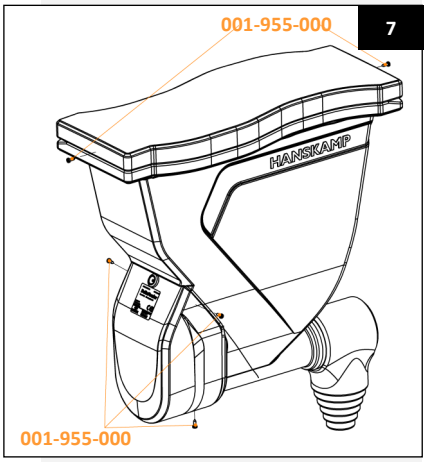

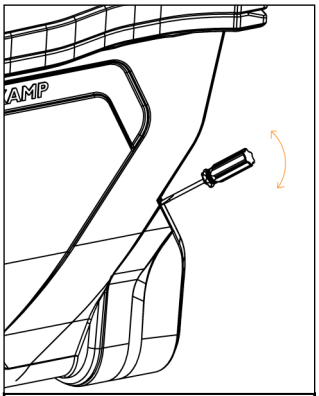

TIP: A flat screwdriver can be used to remove the motor cover.

Adjusting the DeltaFeeder

8. The DeltaFeeder must be correctly adjusted (anti-spill) before it is put into use. Adjustments are made as follows:

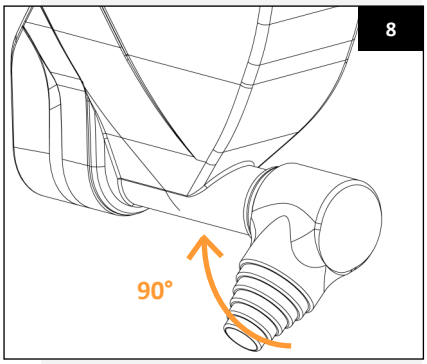

Caution! Before the next step, first switch off the electrical supply of the control unit.

- Dismantle the outfall funnel from the DeltaFeeder. Turn it 90° and move away from the doser (fig. 8 and 9).
- Loosen the M8 bolt.
- Adjust the outfall cup so that the arrow points vertically upwards (fig.10).
- Secure it by tightening the M8 bolt firmly.
- Reinstall the outfall funnel onto the DeltaFeeder (fig. 11).
- Switch on the electrical power.
- Fill the DeltaFeeder and let it run once to check (gives a signal).

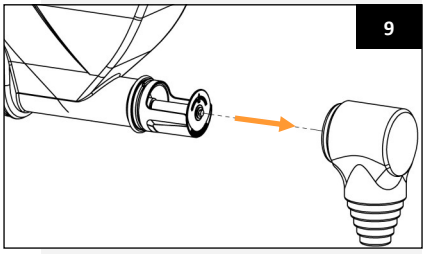

This adjustment should ensure that the outfall cup is in the upward position. This means that a cow that bumps into the downpipe is not rewarded (anti-spill principle). This adjustment must be applied in both the DeltaFeeder milking parlour feeding installation and in the concentrate feed box.

Important!

- Hanskamp can only guarantee that the DeltaFeeder is anti-spill if the motor is set correctly.
- Make sure that the wiring is carefully concealed out of reach of the animals. Otherwise dangerous situations may arise.
- Always carefully fit the motor cover before operating the DeltaFeeder. Otherwise, dangerous situations may occur.

9. The DeltaFeeder works completely electrically. The motor drives an auger. This mechanism doses the concentrate. If a circuit is used that controls multiple dosers simultaneously, such as with control per side (milking parlour feeding), then multiple DeltaFeeder dosers can be connected to one power line. Make sure that the maximum permissible current is not exceeded, this is indicated on the power source (art. no. 002-812-000 or 002-813-000 PowerUnit).

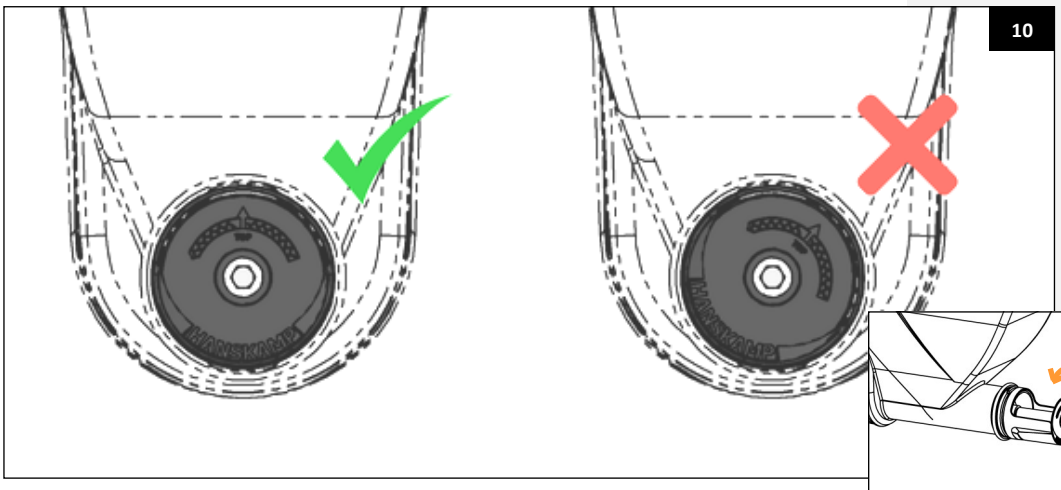

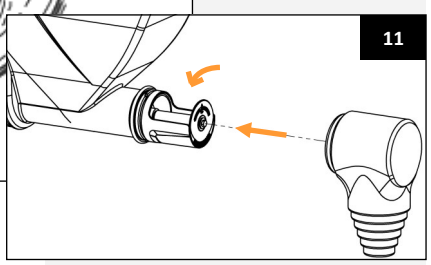

Calibration

10. Calibrating the DeltaFeeder is done by having the feed computer send out a pulse 10 times. Then weigh the dispensed feed and divide it by 10, enter this value in the feed computer. Repeat this procedure monthly and also after changing the type of feed.

Caution!

- The DeltaFeeder is exclusively intended for concentrated feed with a cylindrical shape and with a diameter of Ø2 to Ø8 mm. Otherwise, the manufacturer cannot guarantee proper functioning.
- When installing the DeltaFeeder, make sure that the pressure of the concentrate on the doser does not exceed 50 kg.
- Never put your hand in the downpipe or feed hopper of the DeltaFeeder while it is still in operation or connected to the electrical power supply.

Maintenance

1. Check the DeltaFeeder installation daily for malfunctions and wear. Do this by means of a control test on the feed motors. Make sure that additional noises and other vibrations caused by the operation of the Delta Feeder are reduced or eliminated as much as possible.
2. If maintenance is required on the DeltaFeeder and the DeltaFeeder is connected to a control system, it must be prevented from starting unexpectedly. Make the installation completely voltage-free! To do this, disconnect the power supply from the control unit and the dosing motor.
3. It is recommended that repairs and maintenance be carried out by a specialist.
4. Never open the housing while the DeltaFeeder is still operational. This is due to the risk of electric shock or pinching between the feed auger.
5. The user/owner of the DeltaFeeder must follow the advice and instructions in the manual, so that everyone's safety can be guaranteed. If this is not complied with, it is the responsibility of the user himself and the manufacturer can in no way be held liable for any injury or damage to or by the product.

Please note! When performing maintenance, always switch off the electrical power to the installation first.

Cleaning

Clean the DeltaFeeder regularly with a damp cloth. Do not spray water under the hood or in the downpipe or in the hopper. Make sure that the outlet is and remains clean. Only this can guarantee proper functioning.

Caution! Do not use a high pressure cleaner into or onto the DeltaFeeder. This can cause blockages in the system.

Disassembly

In case of disassembly, all components must be separated by material type and must be disposed of via the designated waste processing cycle.



001-976-000 Ban sticker
It is prohibited to spray with water.

Warranty limitations

Costs and expenses resulting from the following are excluded from the warranty:

- Using the equipment improperly, in violation of the specifications in the installation and operating instructions;
- The consequences of any intervention by mechanics other than mechanics approved by Hanskamp for carrying out certain work;
- Incidents such as freezing, ice, fire, flood, flooding or any other problems caused by excessive water, and lightning;
- Defective electrical system or earthing;
- Damage to the electrical system caused by pests and the like.

The warranty does not apply to consequential damages unrelated to the machine itself. All systems have been tested, However, in the event of defects, Hanskamp AgroTech BV cannot be held responsible for consequential damage.

Overview of changes made in these installation and operating instructions

No.	Release date	Chapter(s)	Comments
1	05/2025	All	First release

Copyright and disclaimer

The information in this publication is for informational purposes only, and is not intended as a sales quote. The products offered may differ from the images. Any brand or product references in this manual are for identification purposes only. The company and product names mentioned in this manual are trademarks. No part of this publication may be reproduced or made public without the prior written consent of Hanskamp AgroTech BV. Although this publication has been compiled with the greatest care, Hanskamp AgroTech BV is not liable for any damage that may arise due to any errors or omissions it might contain. The Dutch installation and operating instructions are the original installation and operating instructions. Translations into other languages are based on the Dutch installation and operating instructions as a source document. Hanskamp AgroTech BV accepts no liability for differences between the translations. If there are any doubts about the content and accuracy of the translated installation and operating instructions, the Dutch installation and operating instructions shall prevail.

Declaration of incorporation of complete machines IIA

According to Annex IIA of the Machinery Directive 2006/42/EC, for completed machines

We,
Hanskamp AgroTech BV
Broekstraat 17
7009 ZB Doetinchem
The Netherlands,

Authorised compiler(s) of the technical file:

H.J. Hanskamp,

declare under our sole responsibility that the following product:

030-000-000 DeltaFeeder
Dosing system for pelletized concentrate feed from Hanskamp AgroTech BV,

to which this declaration relates, complies with the provisions of the following directive(s):

- Machinery Directive 2006/42/EC

and complies wholly or partly with the following essential requirements and that the relevant technical documentation is drawn up in accordance with **Annex VIIA**. The product also complies with the provisions of the following standards:

- NEN-EN-ISO 12100
- NEN-EN-IEC 60204-1
- NEN-EN-IEC 13849-1

If the DeltaFeeder is not connected and the prescribed safety instructions are not used, this Declaration of Conformity is not applicable and no rights can be derived from this declaration.

Doetinchem, the Netherlands, 14-05-2025 H.J. Hanskamp



4. FAQ

Common problem	Possible cause	Solution
There is no feed dispensing.	No feed in hopper.	Check auger and silo.
	Motor is not controlled by the controller.	Remove the cover of the motor and check the indicator lights on the PCB. Check power supply and control (voltage). (See manual ControlUnit, provided when it is used as a control.)
	Check whether the motor runs. Connection piece between the motor and rotor could be missing.	Remove the motor from the rotor and reinstall. Note the correct setting for the anti-spill function (see page 11, step 8).
	Blockage by e.g. wood or plastic.	Remove the DeltaFeeder from the wall and shake it empty.
DeltaFeeder is not anti-spill.	DeltaFeeder is not adjusted correctly.	Readjust, see page 11, step 8.
DeltaFeeder does not dispense the correct amount.	Calibration is incorrect.	Calibrate the controller, see page 12, step 10.

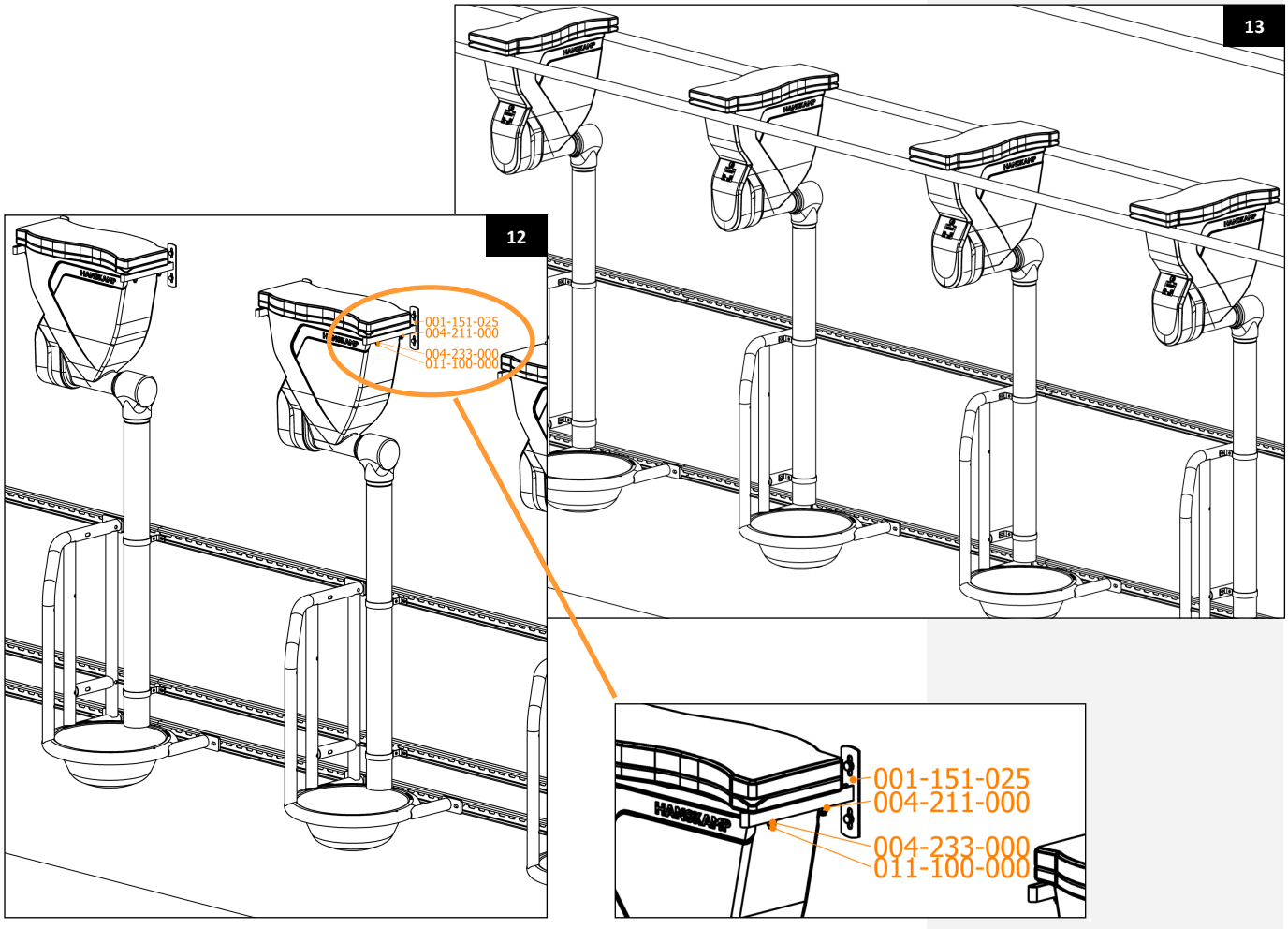

Loose components

For maintenance or for any other reason it is possible to order spare parts from your supplier. Please use the article numbers as indicated on the drawing below.

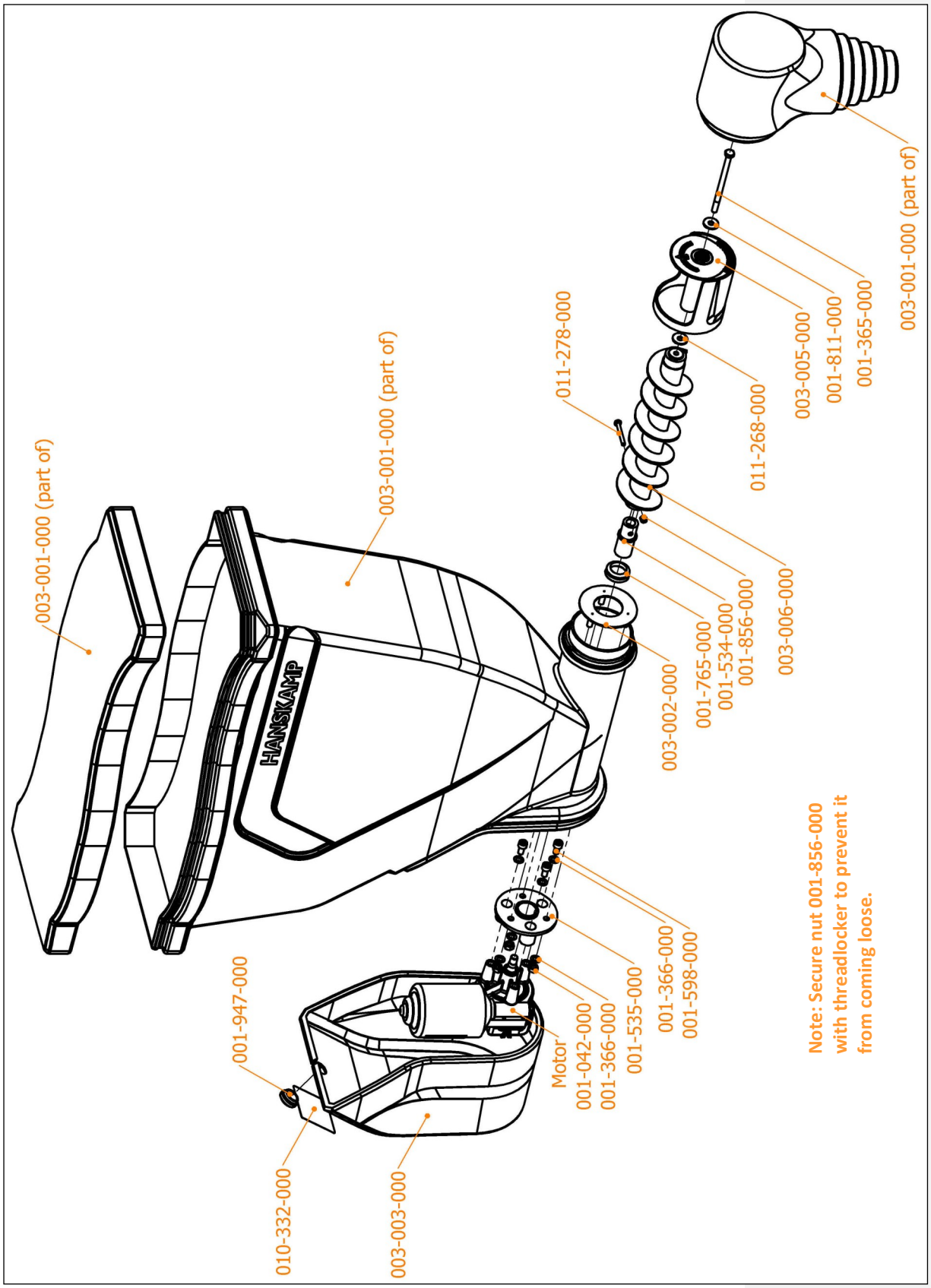

Description of the components

Article number	Description	Quantity
001-042-000	Nut M6 A2	3
001-365-000	Bolt M6x95 DIN 931 A2	1
001-366-000	Wave spring washer M6 A2 DIN 137B	6
001-534-000	Coupling piece M8 white feed auger	1
001-535-000	Plastic insulation house	1
001-598-000	Allen screw M6x12 A2 DIN 912 ve500	3
001-765-000	V-ring bevel back NBR V-22 S	1
001-811-000	Fender washer DIN 9021 M6 x18x1.6 A2	1
001-856-000	Self-locking nut M4 A2 DIN 985 coat	1
001-947-000	Membrane grommet thermoplastic elastomer, black	1
003-001-000	DeltaFeeder graphite grey, incl. feed hopper, cover and outfall funnel	1
003-002-000	DeltaFeeder motor plate stainless steel with 3x threaded rod M6x20	1
003-003-000	DeltaFeeder motor cover graphite grey	1
003-005-000	DeltaFeeder outfall cup plastic black	1
003-006-000	DeltaFeeder auger steel 50 g	1
010-332-000	Serial number sticker DeltaFeeder 030-000-000 with CE	1
010-335-000	Installation and operating instructions DeltaFeeder, all languages	1
011-268-000	Flat ring TPR black Ø6.4mm x Ø18mm x 1.6mm	1
011-277-000	Box suitable for DeltaFeeder, internal dimensions 580 x 240 x 565 mm	1
011-278-000	Hexagon bolt M4x35 DIN 933 A2	1

Motors overview

DeltaFeeder number	Article number	Description	Service Info article number	Quantity
030-xx2-xxx	**011-095-000**	RIM motor 28 RPM, 24VAC with feedback, time-controlled	010-225-0**	1
030-xx7-xxx	**011-125-000**	RIM motor 28 RPM, 24V AC/DC with feedback, pulse-controlled	010-225-0*5	1
030-xx3-xxx	**001-652-000**	Intelligent Motor, black, 28RPM	010-086-000	1
030-xx3-xxx	**001-652-1****	Intelligent Motor, black, 28RPM, dispense over milking time	010-247-000	1
030-xx4-xxx	**011-021-000**	Motor SolidState 5, 28RPM	011-027-000	1
030-xx5-xxx	**001-663-000**	Dosing motor, 28RPM		1
030-xx9-xxx	**001-631-000**	Dosing motor, HighSpeed, 120RPM		1

Installation dimensions

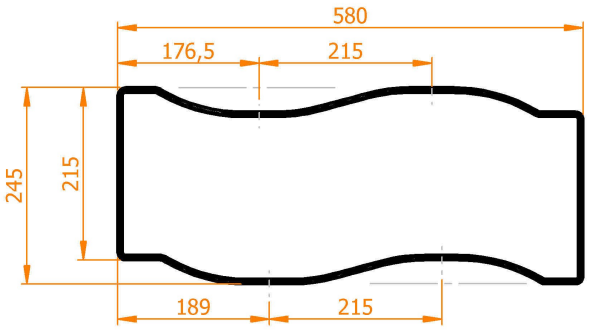

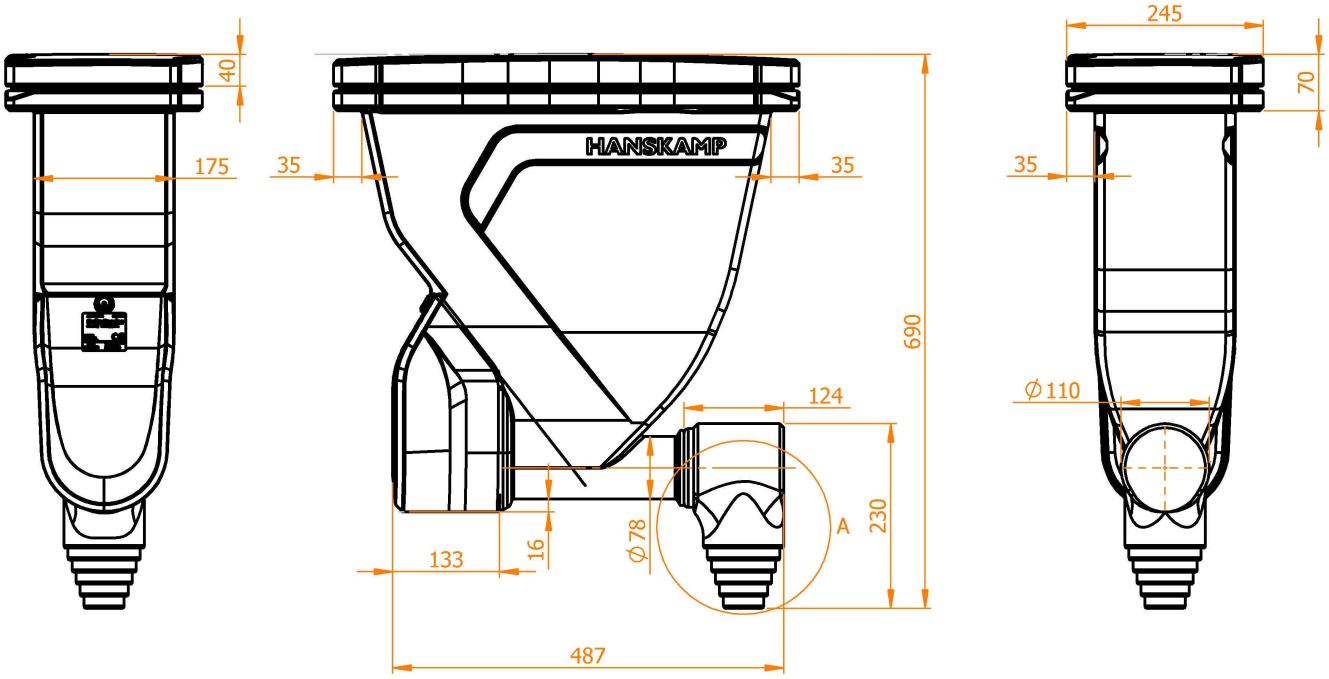

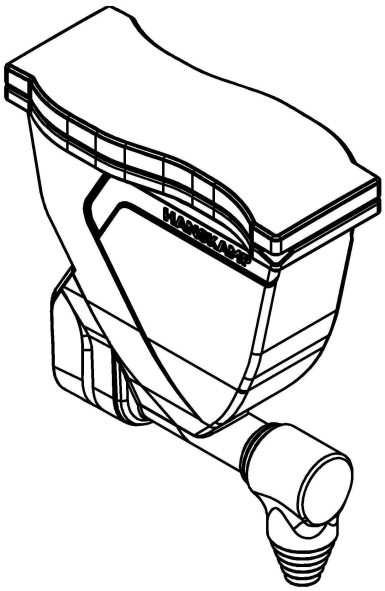

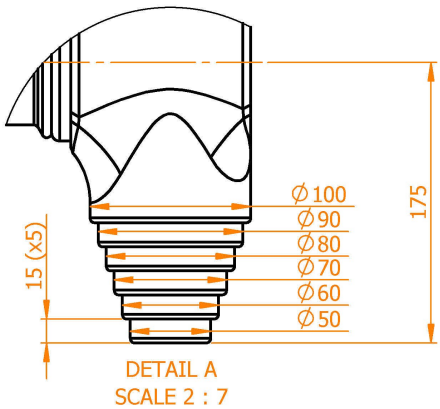

Hanskamp AgroTech BV
Broekstraat 17
7009 ZB Doetinchem
The Netherlands
Tel: +31 (0)314 - 393 797
Fax: +31 (0)314 - 393 826
www.hanskamp.com
info@hanskamp.nl

Also take a look at: