ControlPanel 002-350-000

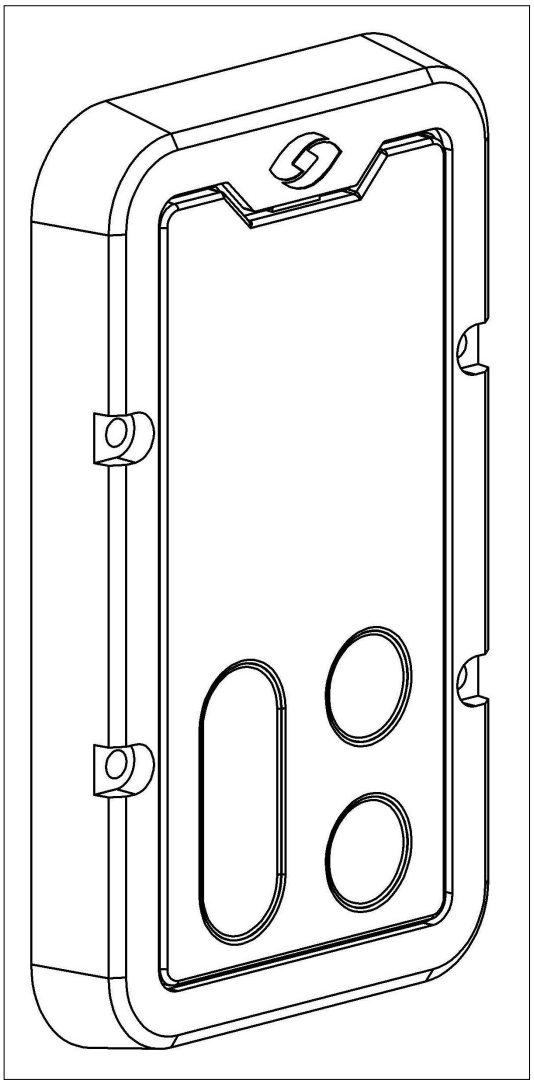

Controller for feed dispensers
Aanstuureenheid voor voerdosators
Steuereinheit für Futterdosierer
Unité de commande pour doseurs d'alimentation

Installation and operation instructions **EN**

HANSKAMP
Innovation for dairy farming

Article number: 010-311-000

Date: October 2021
Version 0.2 - Instructions - Original document

Doetinchem,
The Netherlands
www.hanskamp.nl/en

Table of contents

Chapter	Description	Page
	Table of contents	**2**
	Foreword	**3**
1	**Technical specifications and tolerances**	**4**
1.1	Specifications	4
1.2	Type indication	4
2	**Safety**	**5**
2.1	Regulations	5
3	**Transport**	**6**
4	**Assembly, installation and commissioning**	**6**
4.1	Mechanical assembly	6
4.2	Electrical assembly	7
4.2.1	Individual installation	8
4.2.2	Per side installation	9
4.2.3	Stand-alone installation	10
4.3	Commissioning	11
5	**Operation**	**11**
5.1	Menu & Settings	11
5.1.1	Calibration	11
5.1.2	Feeding method	12
5.1.3	Distribution time	12
5.1.4	Settings	12
5.1.4.1	Colour	12
5.1.4.2	Step size	12
5.1.4.3	Language	13
5.1.4.4	Sleep mode	13
5.1.4.5	Vibration	13
5.1.4.6	Pulse settings	13
5.1.4.7	Time settings	13
5.2	Feeding method: In-parlour feeding	14
5.3	Feeding method: Time feeding	15
5.4	Hidden functions	16
5.5	Reset	16
6	**Maintenance**	**16**
6.1	Preventative maintenance	16
6.2	Spare parts	16
6.3	FAQ	17
6.4	Version management	17
6.5	Dimensional drawing	18

Foreword

These instructions have been put together for everyone working with or responsible for the ControlPanel. Read these instructions before operating or working on the ControlPanel.

The instructions contain important directions and information on how to use the ControlPanel in a safe, professional and economical manner, and should be available at the place where the ControlPanel is used.

The instructions should be supplemented with guidelines based on existing national regulations relating to accident prevention and environmental protection.

Supplier details if not supplied directly by Hanskamp AgroTech B.V.

Name:		Dealer stamp:
Address:		
Telephone number:		
E-mail address:		

Hanskamp AgroTech B.V. guarantees the proper functioning of the ControlPanel for a period of 12 months after delivery, but is not responsible for consequential damage to buildings, machines and the surroundings caused by the ControlPanel or caused in any way whatsoever.
Hanskamp AgroTech B.V. constantly aims to improve its products and services. To that end, we reserve the right to make changes to the specifications mentioned in these instructions at any given time and without prior notification.
The ControlPanel is supplied under the general terms of delivery published by Hanskamp AgroTech B.V. and available at www.hanskamp.nl.
Hanskamp AgroTech B.V. is not responsible for direct or indirect damage resulting from operation errors, lack of professional maintenance and any use other than that described in these instructions.

Hanskamp AgroTech B.V.'s liability also lapses if modifications or additions are made to the ControlPanel by you or third parties without prior written permission.

The ControlPanel is only suitable for process and environmental conditions as stated in the 'Technical specifications and tolerances' chapter of these instructions. Hanskamp AgroTech B.V. does not permit any other use, as this would be hazardous to the operator and/or their environment.

The warranty does not cover costs and expenses resulting from:

- Incorrect use.
- The consequences of any involvement by technicians other than those approved by Hanskamp AgroTech B.V. for performing certain work.
- Incidents such as freezing, ice, fire, flooding, inundation or any other kind of extreme water damage or lightning.
- Defects in the electrical system or grounding.
- Damage to the electrical system caused by vermin, etc.

The warranty does not cover consequential damage not related to the ControlPanel itself. All systems have been tested. However, in the event of malfunctions, Hanskamp AgroTech B.V. cannot be held liable for consequential damages.

1 Technical specifications and tolerances

The Hanskamp ControlPanel is a control panel for the accurate and pre-set dispensing of feed. The ControlPanel can be connected to most regular feed systems with the Hanskamp Intelligent Motor. The ControlPanel is only intended for use in a professional industrial environment.

The ControlPanel may only be used within the limits for specifications and tolerances indicated in the order, on the composition drawing and in these instructions. If the ControlPanel is used outside these specifications, Hanskamp AgroTech B.V. can no longer take responsibility for it.

The ControlPanel is only intended to be used as a control panel connected to a feed system with the Hanskamp Intelligent Motor.

Do not use this ControlPanel for purposes other than intended by Hanskamp AgroTech B.V. This can lead to damage and hazards for the operator and their environment.

1.1 Specifications of 002-350-000 ControlPanel	
ControlPanel power supply	Input: 12-24 VDC (brown = + I white = -) Output: 12-24 VDC (yellow = + I green = -) Suitable for control/pulse from Hanskamp Intelligent Motor (001-652-000), **no motor power supply.**
Limits for storage, transport and use	0 … 40°C Non-condensing RH
IP code	IP67
Cable	Ships with 10 m (4 x 0.34 mm^2) cable. Cable may be shortened.
Materials	Front: Polycarbonate (Transparent) Bumper: Polyurethane (Carbon Black)

Stickers may not be removed.

1.2 Type indication, found on the rear of the ControlPanel:

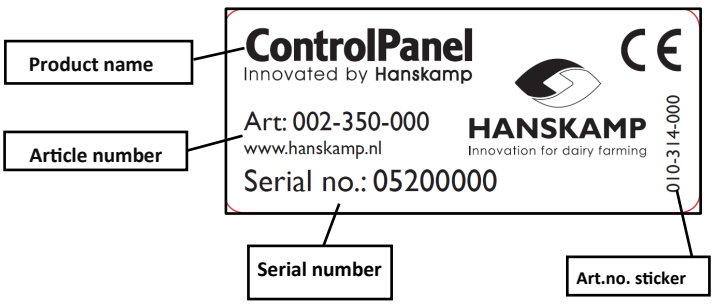

2 Safety

The ControlPanel has been built according to the latest technology and in compliance with the recognised technical safety regulations. Nevertheless, its use can cause danger to life and limb of the user or third parties. Its use can also cause damage to the ControlPanel or other goods.

2.1 Regulations

1. This ControlPanel may only be operated and maintained by qualified personnel, taking into consideration the warnings on the ControlPanel and in compliance with the instructions. Keep children and other unauthorised people out of the area while the ControlPanel is being used.
2. The ControlPanel is only suitable for process and environmental conditions as stated in the 'Technical specifications and tolerances' chapter of these instructions. Hanskamp AgroTech B.V. does not permit any other use, as this would be hazardous to the operator and/or their environment.
3. It is forbidden to modify this ControlPanel without the prior written approval of Hanskamp AgroTech B.V.
4. Only a qualified electrician may install the power supply for the ControlPanel. Ensure that no animals can get near the cables during installation. Check that the electrical grounding of the electrical system and all components of the ControlPanel meet the local rules and regulations.
5. The ControlPanel must be installed in such a way that there is sufficient space for working safely and carrying out maintenance and/or inspections.
6. Keep the work environment clean and well-lit. An untidy or unlit work environment can lead to accidents.
7. Keep hands, hair, loose clothing and/or jewellery away from moving parts of the product operated by this ControlPanel.
8. No connection or safety feature whatsoever may be removed while the ControlPanel is on. The ControlPanel should only be used if all protection measures and safety features are present and operational.
9. Never move the ControlPanel if the power supply is still connected.
10. The time frames for periodic checks and maintenance prescribed or indicated in the instructions must be adhered to.
11. The ControlPanel should only be maintained and repaired by qualified and skilled personnel using original replacement parts.
12. Replace electrical wiring, cable sheaths, switches and parts immediately if they are damaged.
13. In addition to the instructions, generally applicable legal and other binding regulations regarding accident prevention and environmental safety must be observed. This also includes the regulations regarding the use of personal protective equipment.
14. Inform operators prior to any maintenance work being carried out. Shut off the power by disconnecting the power supply before cleaning, examining or maintaining the ControlPanel.
15. If the ControlPanel is damaged and no longer works in the prescribed manner, work must be stopped immediately. Work may only resume once the ControlPanel has been repaired or replaced and checked. Consult your supplier if the ControlPanel does not work properly.
16. The ControlPanel and/or components must be transported in accordance with local legislation and regulations.

3 Transport

Follow all the regulations as described in these instructions, particularly the chapter on safety.

Report any damage, during or directly after delivery, to the transporter and to Hanskamp AgroTech B.V. Take all necessary measures to prevent further damage.

4 Assembly, installation and commissioning

Follow all the regulations as described in these instructions, particularly the chapter on safety.

4.1 Mechanical assembly

Set up this product in such a way that there is sufficient space to ensure safety when working on the machine or cleaning, maintaining and inspecting it.

Assembly examples can be found on www.hanskamp.nl/en.

The ControlPanel consists of a ControlPanel with a mounting plate or a support.

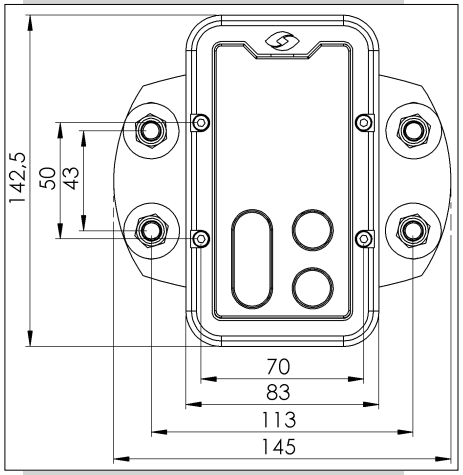

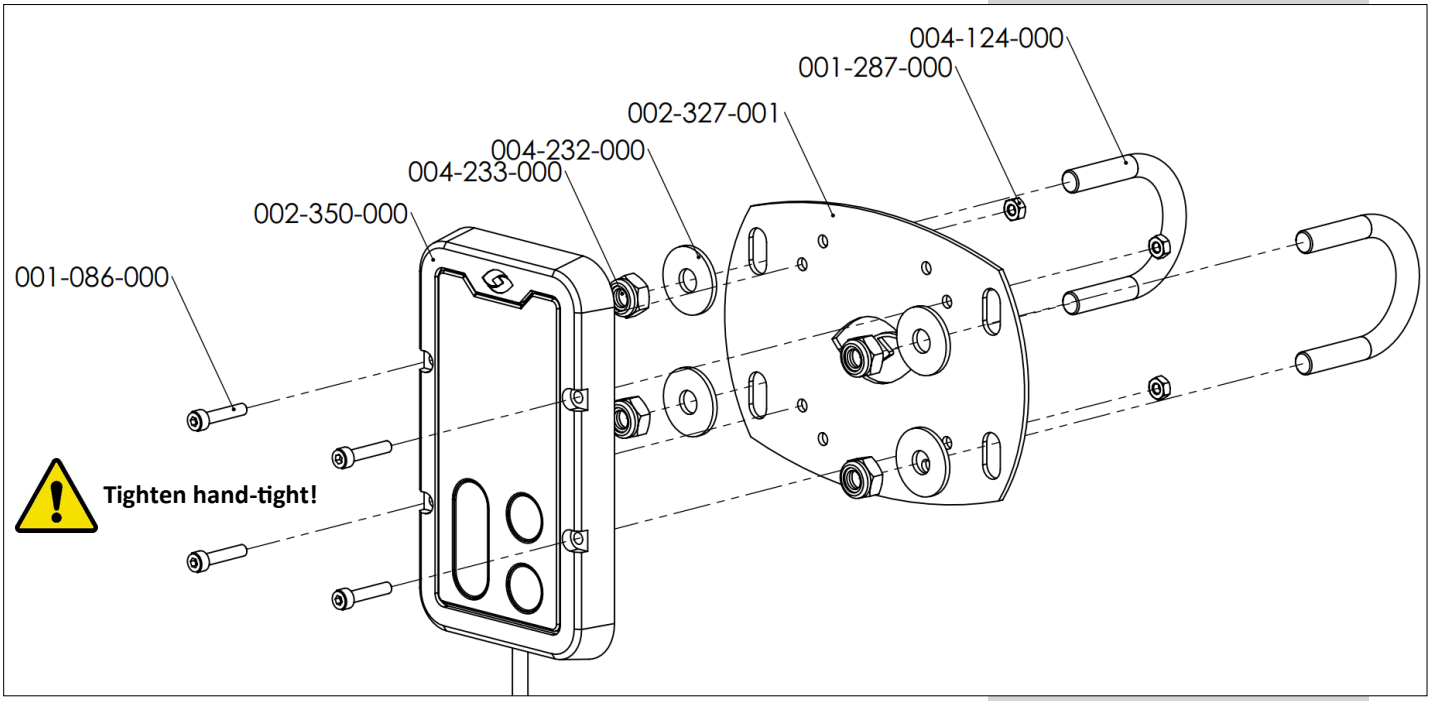

Installing support:

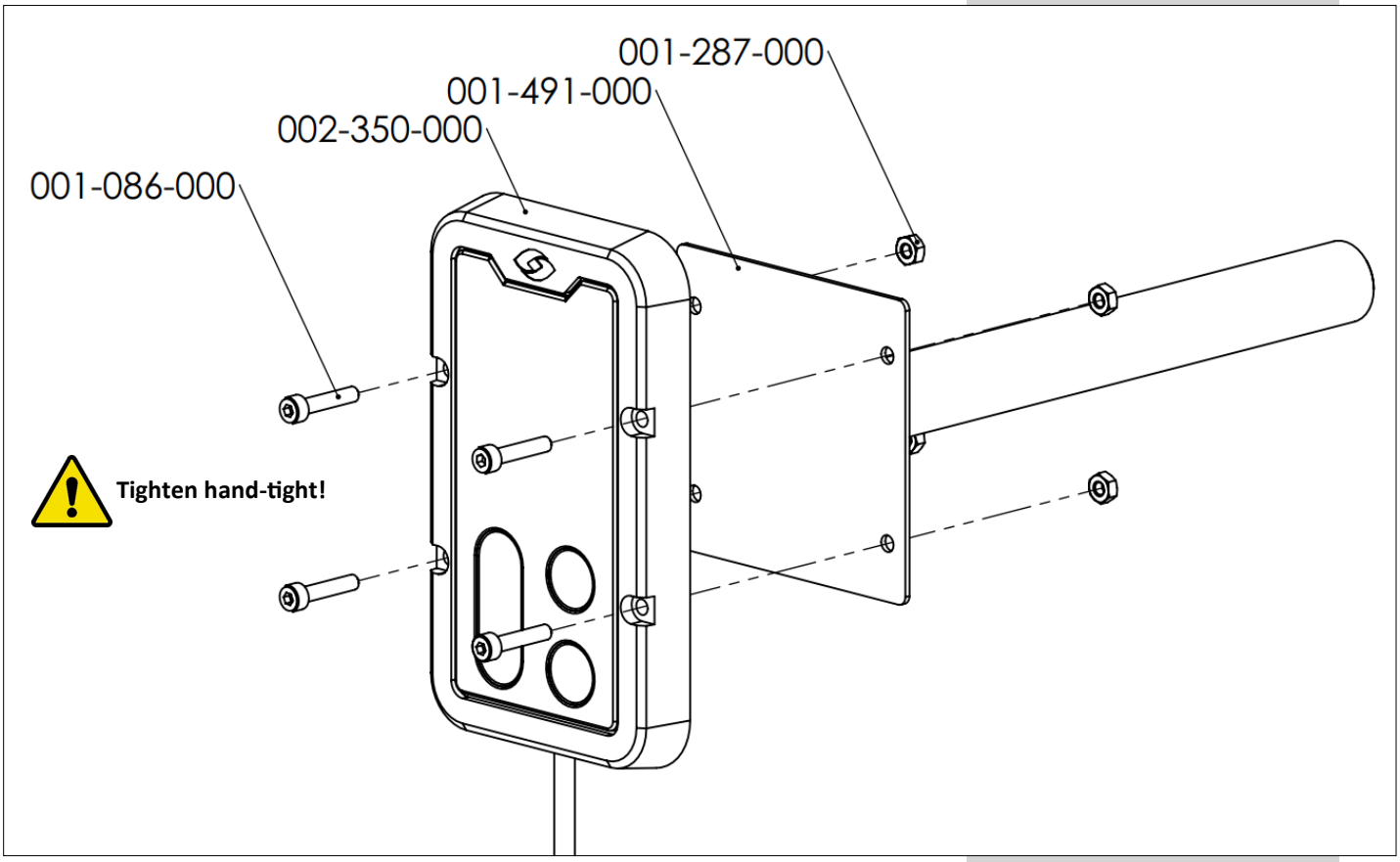

4.2 Electrical assembly

Only a qualified electrician may install the power supply for the ControlPanel.

Ensure that no animals can get near the cables during installation.

Check that the electrical grounding of the electrical system and all components of the ControlPanel meet the local rules and regulations.

Electrical assembly can be carried out in three ways:

- Connect each ControlPanel individually (individual in-parlour feeding).
  Feeding method: In-parlour feeding.
- Feeding per side with connecting several dispensers (Intelligent motors) on 1 ControlPanel per side (batch feeding).
  Feeding method: In-parlour feeding.
- 'Stand-alone' feeding with plug-in power supply; connected directly to one dispenser.
  Feeding method: Time feeding.

4.2.1 Connecting ControlPanel individually

With the individual electrical assembly of a ControlPanel, the 24VDC power supply can be looped for several ControlPanels in the manner described below. With individual electrical assembly, each motor is controlled by 1 ControlPanel.

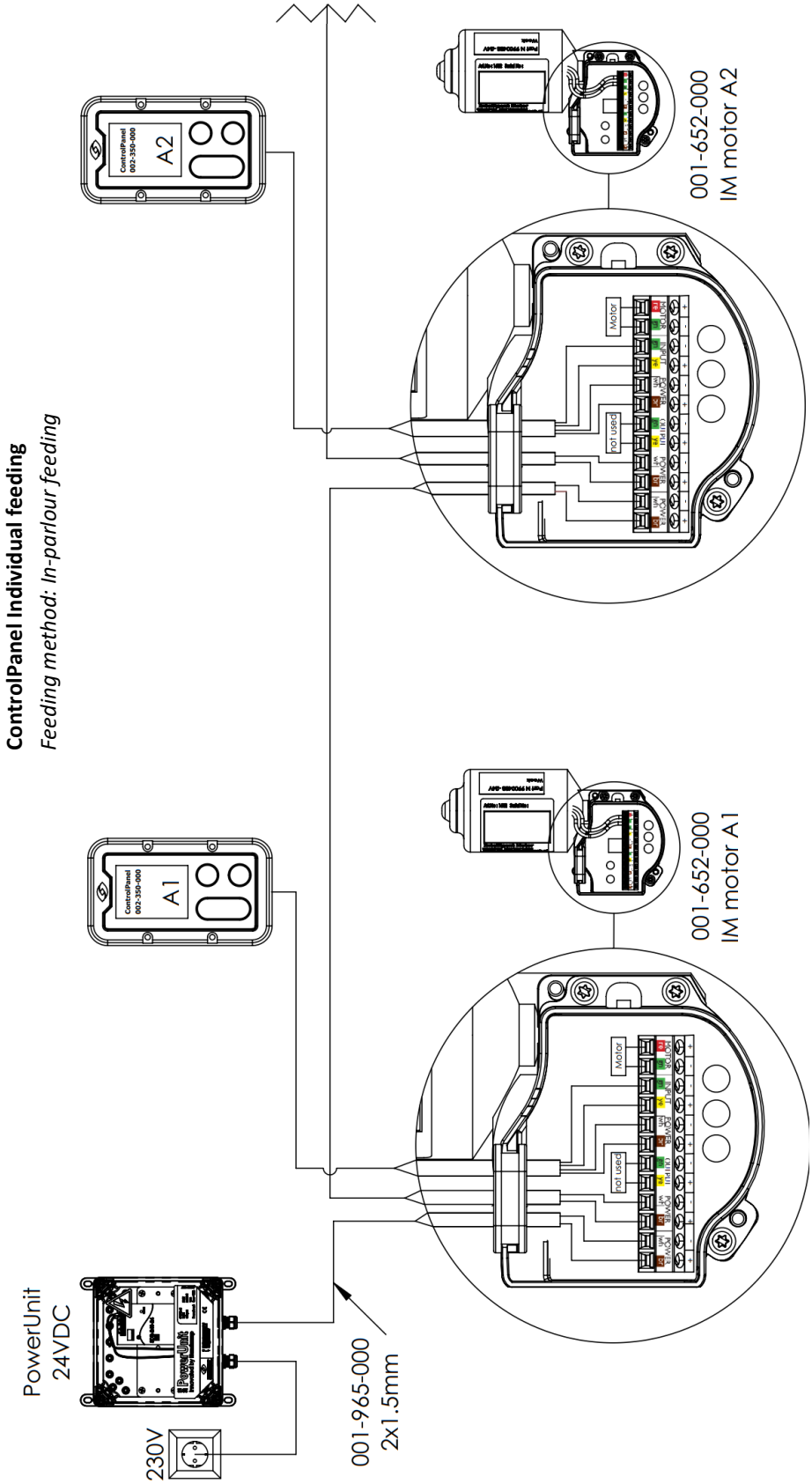

4.2.2 Connecting several motors on 1 ControlPanel (per side)

With the electrical assembly of several dispensers (Intelligent Motor) on 1 ControlPanel, the 24VDC power supply can be looped for several ControlPanels in the manner described below. The dispensers will dispense the same ration. A delay of 0.5 sec has been built into the motor to prevent peak flows when starting up.

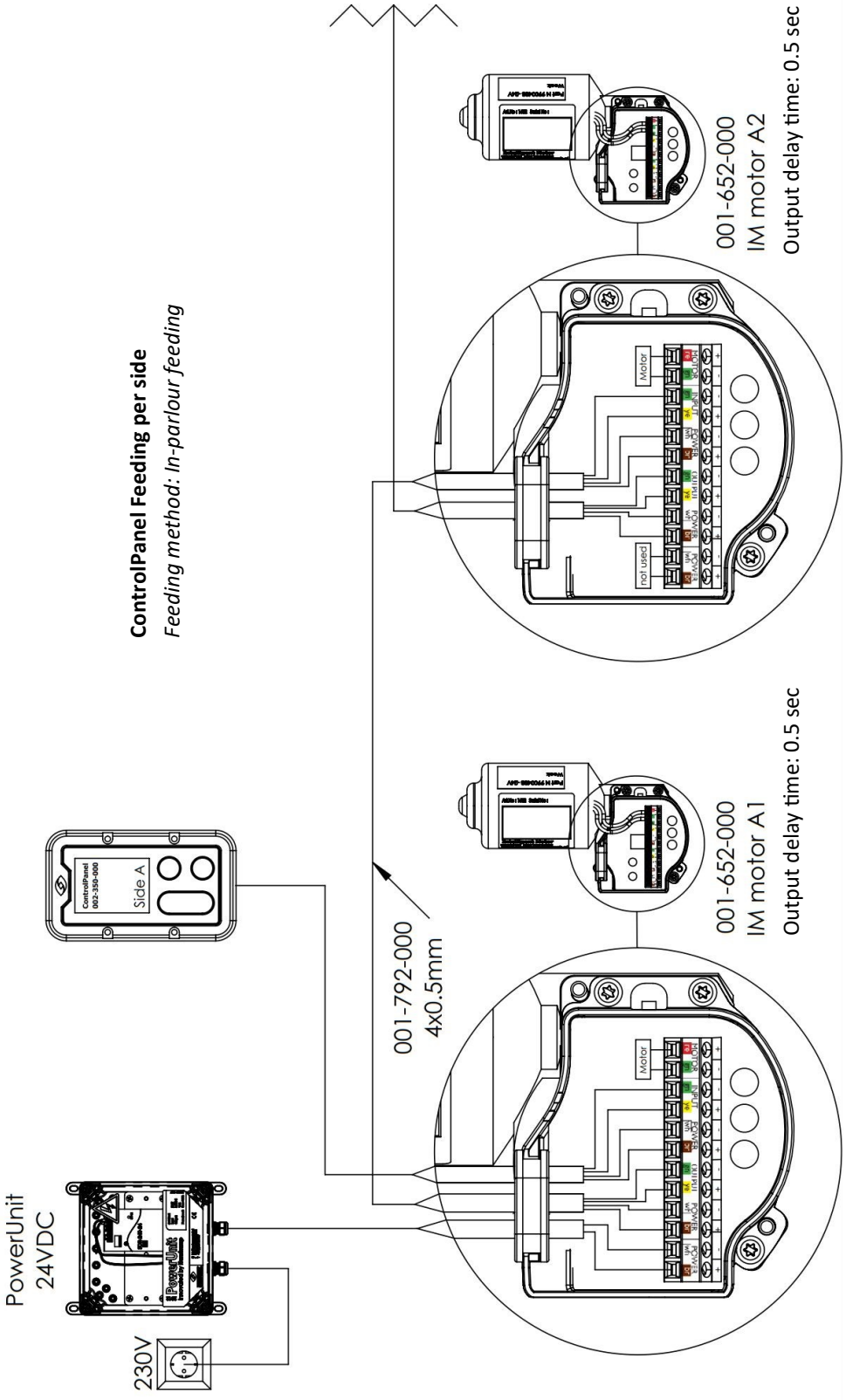

4.2.3 'Stand-alone' feeding with plug-in power supply

With the electrical assembly of a single dispenser (Intelligent Motor) on 1 ControlPanel, a 24VDC plug-in power supply can be used in the manner described below. Ensure that the plug-in power supply has sufficient capacity (> 1.5A).

ControlPanel stand-alone feeding
Feeding method: Time feeding

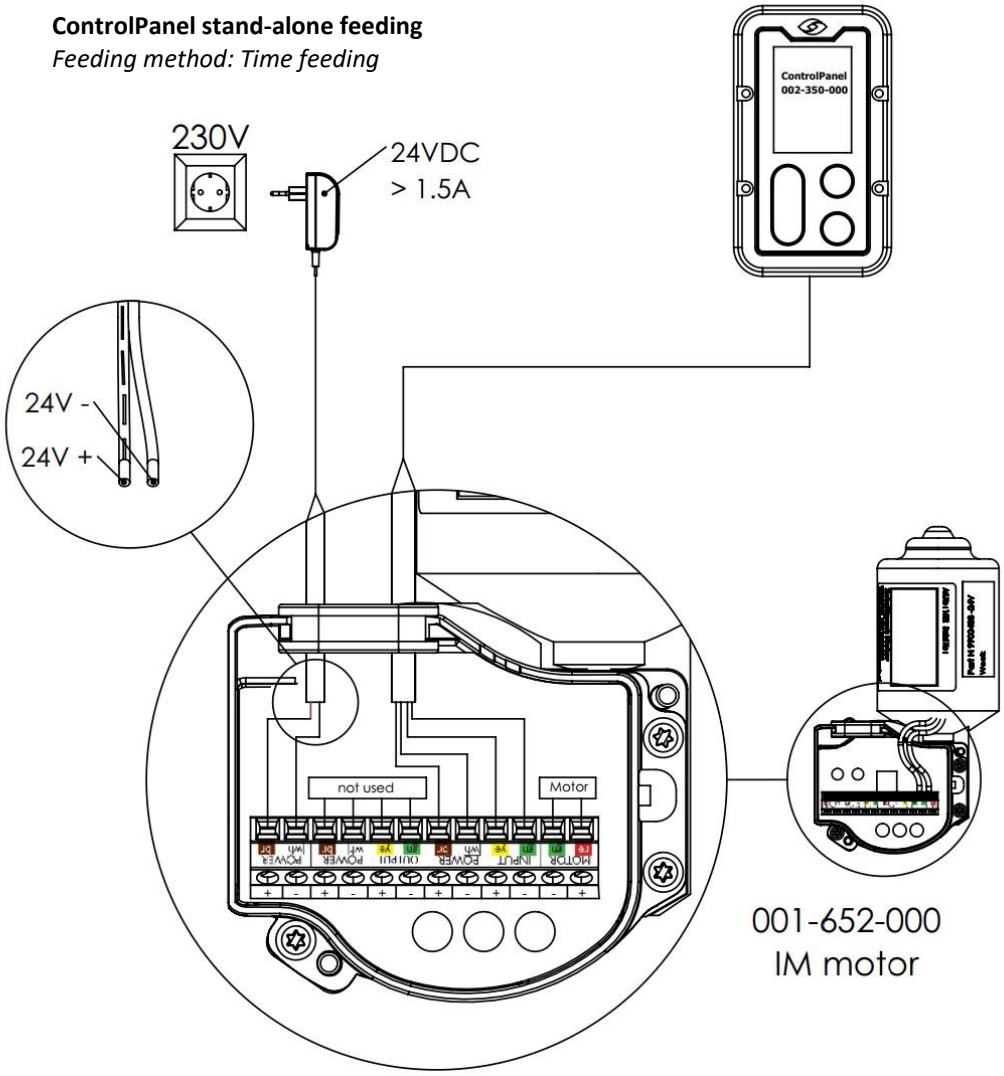

4.3 Commissioning

Before using the ControlPanel for the first time, the feed rations must be calibrated (see chapter 'Operation').
The feeding method must also be determined (see chapter 'Feeding method').
-> For in-parlour feeding, select the option: 'In-parlour feeding' (default).
-> For stand-alone feeding (at set time), select the option: 'Time feeding'.

5 Operation

Follow all the regulations described in these instructions, particularly the chapter on safety.

If the ControlPanel is damaged and no longer works in the prescribed manner, work must be stopped immediately. Work may only resume once the ControlPanel has been repaired or replaced and checked. Consult your supplier if the machine does not work properly.

5.1 Menu & Settings

After pressing and holding the ✕ - button for 2 seconds in the home screen, navigate to the main menu.
Select and navigate to the submenus using the arrow buttons (**Λ / V**) and selecting with the ✔ - button. The ✕ - button allows you to go 1 step back.



Most settings have to be set individually for each ControlPanel.

5.1.1 Calibration

After selecting calibration in the main menu, the following screen appears.
Calibration procedure:

1. Press the ✔ - button and collect the feed (start calibration process).
   The ControlPanel emits 10 pulses and stops automatically.

2. Weigh the feed with a kitchen scale and enter the weight in the screen with the **Λ / V** buttons.
   The ControlPanel automatically calculates the portion weight (divide the weight by the number of pulses).

3. Press and hold the ✔ - button for 2 seconds to save the calibrated weight. After saving, the home screen appears.

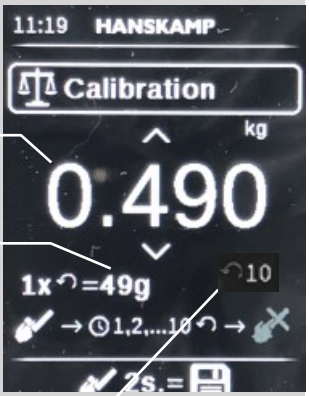

Weighed calibration weight (set)

Set calibration per portion (portion weight)

Number of rotations by which it is divided

During the calibration process:
✔ = pause; again ✔ = resume

✕ = halt calibration cycle (weighed amount can still be entered)

Each ControlPanel must be calibrated separately!

5.1.2 Feeding method

After selecting the 'Feeding method' in the main menu, this screen appears. Select 'In-parlour feeding' or 'Time feeding'.
Feeding method 'In-parlour feeding' is for in-parlour feeding. The set amount of feed is distributed over the set distribution time (milking time).

Feeding method 'Time feeding' is for stand-alone systems. This method can be used to automatically dispense the pre-set doses at set times.
After selecting 'In-parlour feeding' or 'Time feeding', this choice changes in the main menu.

Please be aware that this setting changes the entire operation of your ControlPanel.

'In-parlour feeding' in operation: see chapter 'In-parlour feeding'.
'Distribution time' menu has become available.

'Time feeding' in operation: see chapter 'Time feeding'.
'Time feeding' and 'Settings' menu -> 'Time setting' has become available.

5.1.3 Distribution time (milking time)

After selecting 'In-parlour feeding' in the 'Feeding method' submenu, this screen appears. Select and save the set time for distributing the set amount. The set amount of feed is then dispensed in the set time. For this time, you can set the shortest or average milking time.

After entering the time, press and hold the ✔ - button for 2 seconds to save the setting.

This distribution time must be set and saved separately for each ControlPanel!

If you have selected 'Time feeding' at 'Feeding method', this menu item is displayed as 'Time feeding'. This is described in chapter 'Time feeding'.

5.1.4 Settings

After selecting 'Settings' in the main menu, this screen appears.
Select and navigate to the submenus by using the arrow buttons (**Λ / V**) and selecting with the ✔ - button. The ✘ - button allows you to go 1 step back.

5.1.4.1 Colour

After selecting 'Colour' in the 'Settings' submenu, this screen appears. Select the colour of the display.

5.1.4.2 Step size

After selecting 'Step size' in the 'Settings' submenu, this screen appears. Select the step size for setting the amount of feed.









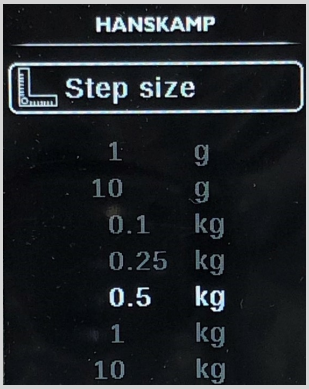

5.1.4.3 Language

After selecting 'Taal' (Language) in the submenu 'Instellingen' (Settings), this screen appears. Select the language of the software.

You can choose from: Dutch, English, German, French and Spanish.



5.1.4.4 Sleep mode

After selecting 'Sleep mode' in the 'Settings' submenu, this screen appears. Here you can set the display switch-off time.
The display goes on again once you press a button or wave in front of the screen.

The default value is 30 min.



5.1.4.5 Vibration

After selecting 'Vibration' in the 'Settings' submenu, this screen appears. When a button is operated, the ControlPanel vibrates to provide the user feedback. Set the vibration intensity for the ControlPanel. The ControlPanel does not vibrate at the feed setting (increase/reduce).

The default value is 67 %.

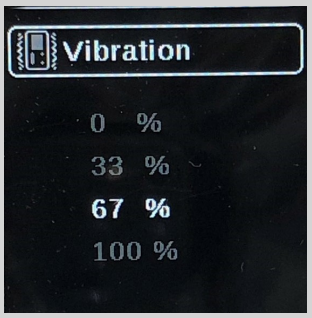

5.1.4.6 Pulse settings

After selecting 'Pulse settings' in the 'Settings' submenu, this screen appears. Set the duration of a feed pulse and the rest time between two feed pulses. After entering the time, press and hold the ✔ - button for 2 seconds to save the values.

The default value is p=1.25 and r=1.50. These are the recommended settings for the Intelligent Motor 001-652-000.

Setting values other than those stated above can lead to the Intelligent Motor receiving more pulses than intended. It is therefore recommended not to change these values.

Recommended value for RIM time motor 011-095-000 is p=2.5 and r=0.25.
Recommended value for RIM pulse motor 011-125-000 is p=1 and r=1.75.
Recommended value for SolidState motors 011-021-000/ 001-001-000 / 001-440-000: not suitable for ControlPanel control.

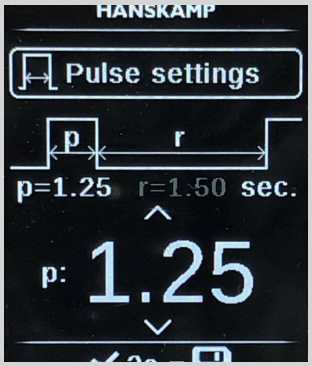

5.1.4.7 Time settings

After selecting 'Time settings' in the 'Settings' menu, you can set the current time. The time is shown on the display and is used for 'Time feeding' (not displayed when the 'Feeding method' is set to 'In-parlour feeding').
After entering the time, press and hold the ✔ - button for 2 seconds to save the value.



5.2 Feeding method: In-parlour feeding

After starting up, the home screen appears. It is recognisable by the house icon in the upper right corner.

Depending on the selected feeding method, functions and parameters for 'In-parlour feeding' or 'Time feeding' are displayed (see chapters: 'In-parlour feeding' and 'Time feeding').

✔ = start feed cycle

The set amount of feed is distributed on the basis of the portion size over the set distribution time (for setting distribution time, see chapter Menu & Settings -> 'Distribution time').

During feeding process:
✔ = pause; again ✔ = resume

✕ = halt feed cycle

Λ / V = increase or reduce feed amount for next cycle

If the time is too short and the ration has not been fully dispensed, the time is extended until the entire ration has been given.

The time is calculated by the ControlPanel and displayed by means of the set pulse time [p] and rest time [r].

Press and hold the ✕ - button for 2 seconds to halt the ongoing cycle and go to the main menu.

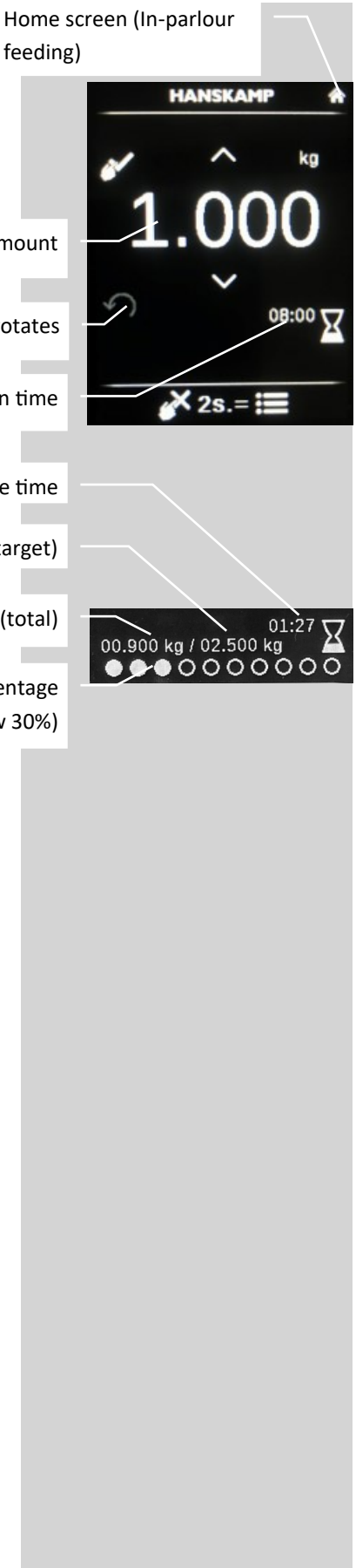

5.3 Feeding method: Time feeding

After selecting 'Time feeding' in the 'Feeding method' submenu, this screen appears. You can see the set times (24 hours) and rations, as well as add or remove times with rations.

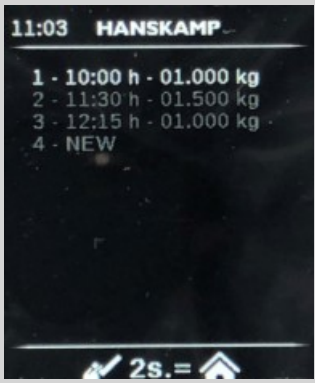

With 'Time feeding', the dispensing is not distributed over a set time (such as with 'In-parlour feeding'), but will be carried out automatically according to the set pulse time and rest time.

For 'Time feeding', it is important that the current time is correctly set (see chapter 'Time settings'). When switching from 'In-parlour feeding' to 'Time feeding', the current time blinks to indicate that this needs to be checked.

Warning: with 'Time feeding' the controlled Intelligent Motor starts automatically at the set time.

These times and rations can be changed by selecting via the 'Time feeding' menu. After selecting 'NEW', this window appears. Enter the desired starting time.

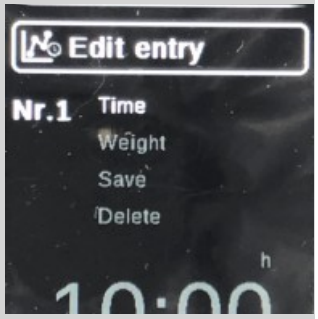

After entering the time, this window appears. Enter the desired ration weight.
Select 'Save' to activate the new time and feed weight.
A maximum of 12 lines can be entered.
The status of the feed cycle is displayed during the feed cycle.



✔ = pause; again ✔ = resume

✖ = halt feed cycle

Time feeding home screen

After the first feed cycle of the day, both the feed cycle that has been completed and the next feed cycle will be indicated.

Press and hold the ✖ - button for 2 seconds to halt dispensing and go to the main menu.
Press and hold the ✔ - button for 2 seconds to emit a test pulse.

It is possible that a cycle is not completed successfully (indicated by an encircled X). This may be because the ✖ - button was pressed during feeding or when the next feed rate was started (read: scheduled too early) while the current one was not yet completed.

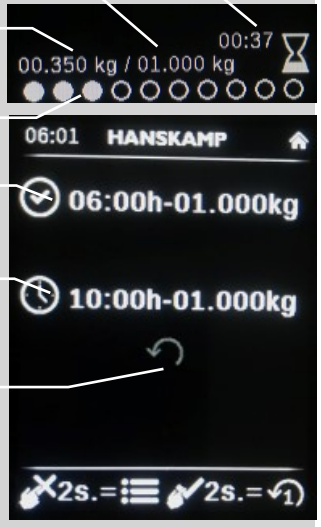

5.4 Hidden functions

Press the ✔ - button once to pause feed dispensing; press the ✔ - button again to resume feed dispensing (for calibration, home screen 'Time feeding' and 'In-parlour feeding'). Press and hold the ▲ + ✔ - buttons for 10 seconds to reset the default values in the software. Press and hold the **I** + ✔ - buttons for 10 seconds, to show the readout values of the buttons on the screen. If an X is displayed next to the button in question, the button is actually pressed and registered. This display closes automatically after 10 seconds.

5.5 Reset

Switch off the power to the ControlPanel to reset this. Saved values/parameters remain saved. Always check the set time (with feeding method 'Time feeding') after a reset.

6 Maintenance



Follow all the regulations as described in these instructions, particularly the chapter on safety.



Maintenance should be carried out by qualified personnel, taking into consideration the warnings on the ControlPanel and in compliance with the instructions.



Keep hands, hair, loose clothing and/or jewellery away from moving parts of the product operated by this ControlPanel.

6.1 Preventative maintenance

The following maintenance instructions are based on normal use. With intensive use or use under extreme circumstances, the time between maintenance should be shorter.

Item	1x per...	Comments
ControlPanel	Day	Check that moving parts are functioning correctly and are not stuck and that parts are not broken or damaged and adversely affecting the operation. Have damaged parts repaired before continuing use.
ControlPanel	Day	After starting, check for any unusual noises.
Pictograms	Week	Check readability and replace if necessary.
Stickers	Week	Check readability and replace if necessary.
Electrical installation	Month	Check for damage. Replace electrical wiring, cable sheaths, switches and parts immediately if they are damaged. Only a qualified electrician may install the power supply for the ControlPanel. Ensure that no animals can get near the cables during installation. Check that the electrical grounding of the electrical system and all components of the ControlPanel meet the local rules and regulations.
Calibration	After filling silo	Calibrate the ControlPanel regularly. It is recommended to calibrate the ControlPanel after each feed delivery.

6.2 Spare parts

Only original Hanskamp AgroTech B.V. parts and accessories may be used on the ControlPanel.
Hanskamp AgroTech B.V. recommends that you keep certain parts in stock due to their susceptibility to wear and/or the standstill that would be expected if they would have to be ordered.

6.3 FAQ

Problem/question:	Possible cause:	Solution/answer:
Can the ControlPanel be operated wearing milking gloves?		Yes, thin gloves have no effect on the buttons. The buttons do not work better when they are pressed harder.
Can the milking time be adjusted per cow?		No, this is a system setting for 'In-parlour feeding'. When the desired ration is greater than the distribution time, the time will be automatically extended.
The buttons no longer respond.	The button is no longer calibrated or the program has frozen.	Wait ±30 sec, without touching the ControlPanel then try again. If this does not resolve the problem, disconnect the ControlPanel from the power.
Time is incorrect/daylight saving time.	Time does not correspond with the time on the display; possibly due to a power outage or because the time has been adjusted.	ControlPanel does not take account of daylight saving time. The time can be adjusted manually, as described in chapter 'Time settings'.
Is the ControlPanel also suitable for carousel feeding (HighSpeed)?		No, Hanskamp AgroTech B.V. has other control solutions (MotorController/SmartPanel) for feeding in the carousel/ milking rotary.
Which motors can be controlled by the ControlPanel?		See chapter 'Pulse settings' for an overview/summary and explanation.
How can I clean the ControlPanel?		Disconnect the ControlPanel from the power. It is possible that the buttons may respond to water. Do not use caustic cleaning agents which may affect the Polycarbonate cover.

6.4 Version management

Overview of changes included in this installation and user instruction:

Nr.	Edition date:	Chapter(s)	Comments
0.1	04/2020	All	First
0.2	10/2021	Distribution time becomes in-parlour feeding	Multiple customisations

6.5 Dimensional drawing

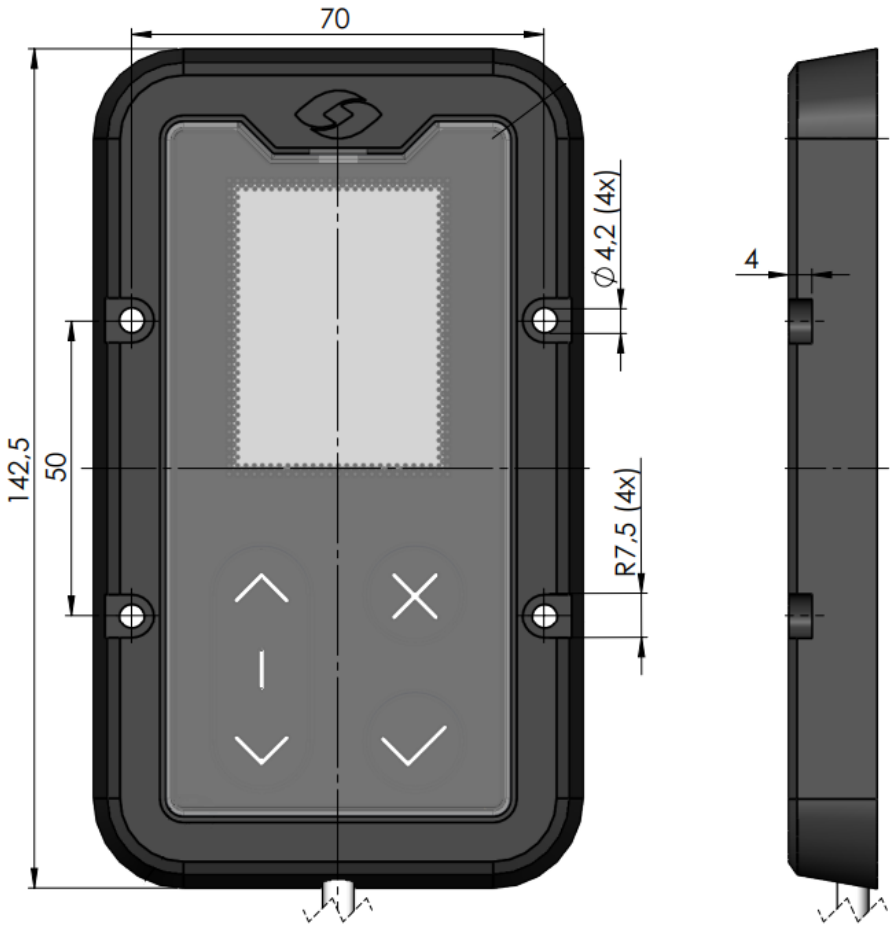

Mounting with bolts tighten hand-tight!



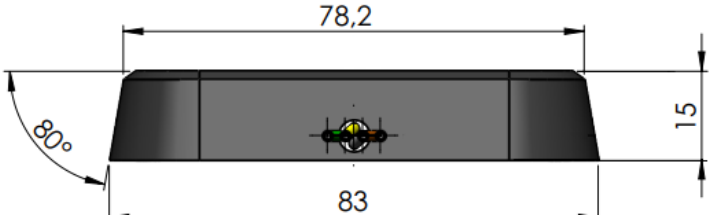

Copyright and disclaimer
The information in this publication is intended only for information purposes and is not to be regarded as a sales offer. Products may deviate from the images shown. Nothing in this publication may be copied or made public without the prior written permission of Hanskamp AgroTech B.V. Although this publication has been compiled with the greatest possible care, Hanskamp AgroTech B.V. is not liable for any damage that could arise from errors or omissions in this publication.
The Dutch instructions are the original instructions. The translations into other languages use the Dutch instructions as a source document. Hanskamp AgroTech B.V. does not accept any liability for differences between the translations. If there are any doubts regarding the content and accuracy of the translated instructions, the Dutch instructions will form the authoritative document.

Hanskamp AgroTech B.V.
Broekstraat 17
7009 ZB Doetinchem
The Netherlands
Tel: +31 (0)314 - 393 797
Fax: +31 (0)314 - 393 826
www.hanskamp.nl/en
info@hanskamp.nl

Please also visit: