Black-V anti-spill

002-670-000

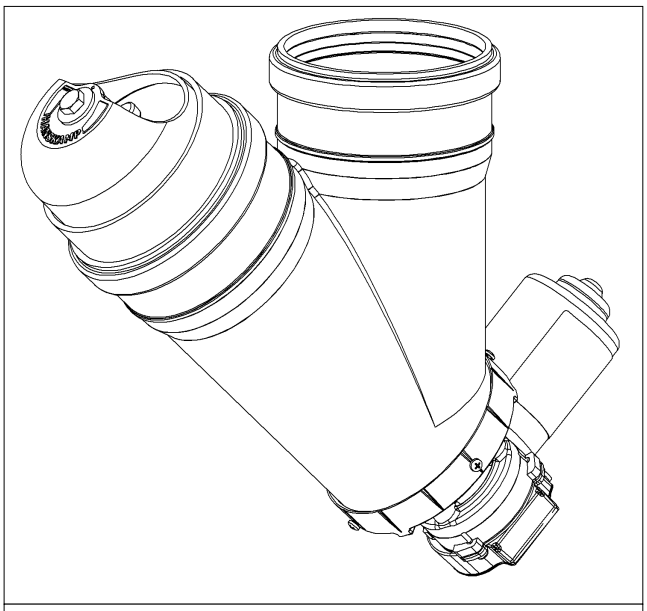

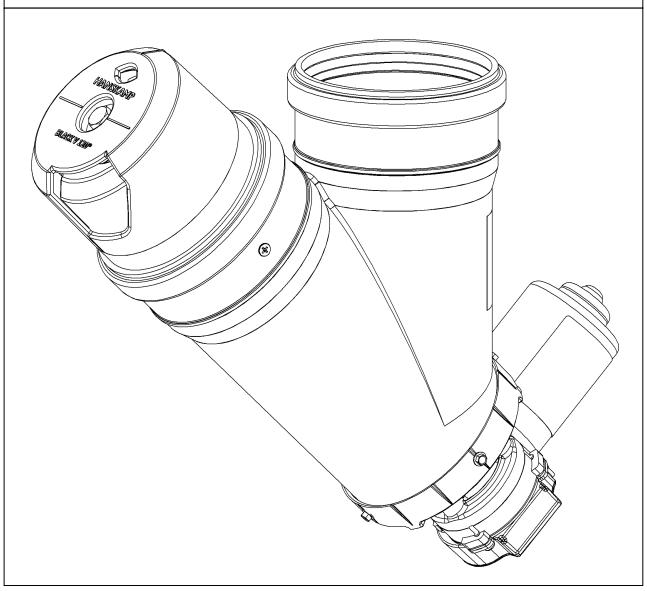

Anti-mors voerdosator

Anti-spill feed dispenser

Verschüttfreier Futterdosierer

Doseur d'alimentation anti-gaspillage

Installation and operation manual **EN**

HANSKAMP

Innovation for dairy farming

Article number: 010-252-000

Date: March 2022
Version 1.7 - Translation of original Installation and Operation Manual
According to Annex 1 Chapter 1.7.4 of the Machinery Directive 2006/42/EC

Doetinchem,
The Netherlands
www.hanskamp.nl/en

Preface

Contents of this manual

This manual contains important information for the correct installation and operation of the Hanskamp Black-V anti-spill. Read and understand this information thoroughly before installing the Black-V. Failure to do so could result in damage to the equipment. Please consult your milking equipment dealer if you do not understand the information in this manual or require additional information.

All information in this manual has been compiled with the greatest care. Hanskamp shall not be liable for errors or faults in this manual. The recommendations made are meant to serve as guidelines. All instructions, illustrations, and specifications in this manual are based on the latest information that was available at the time of publication. Your Black-V may contain improvements, features or options that are not covered in this manual.

Applicability

The table below shows the type numbers of the Black-V to which this manual applies. See also fig. 1.

Model designation

Model	Type number	Volume	Fits in
Black-V anti-spill	002-67*-010	30 g - 800 g/min	Feedstation (*DeLaval FSC 40 & 400)*
	002-67*-011	10 g - 240 g/min	Feedstation *(DeLaval FSC 40 & 400)*
	002-67*-111	5 g - 120 g/min	Feedstation *(DeLaval FSC 40 & 400)*
	002-67*-020	30 g - 800 g/min	VMS / Parlour
	002-67*-021	10 g - 240 g/min	VMS / Parlour
	002-67*-121	5 g - 120 g/min	VMS / Parlour

Contact details of your milking equipment dealer

We suggest you note down the name, address, telephone number and e-mail address of your milking equipment dealer in the table below. This makes sure you can easily find the information.

Name	
Address	
Telephone number	
E-mail address	

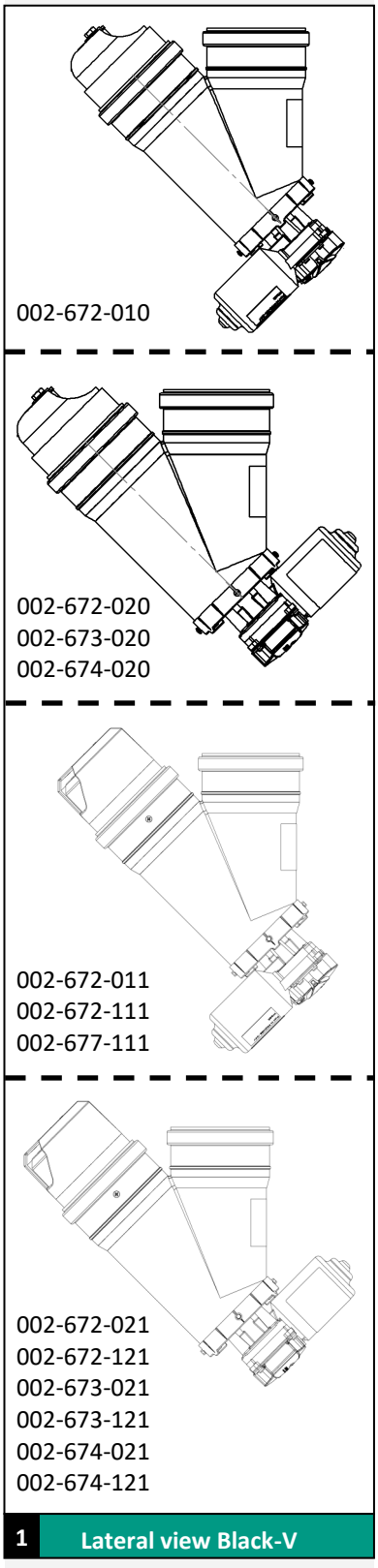

1 Lateral view Black-V

1. Introduction

A calm herd heavily contributes to the health and welfare of each individual cow. However, a common problem with concentrate dispensers in out-of-parlour feeders and milking robots is spillage of concentrate from the dispenser, after feeding has stopped. This happens especially when cows bump against the feeders and are rewarded for their unwanted behaviour by spilling pellets. The result is restlessness in the area around the out-of-parlour feeding station.

Hanskamp's spill-free Black-V offers the perfect solution for this problem. This product consists of a dosing system that is connected to an electric motor, and is mounted below the concentrate dispenser. The motor actuates an auger, which dispenses the concentrate feed in portions via a dosing disc at the end of the auger. After a portion has been dispensed, the dosing disc is automatically positioned in such a way that it prevents more concentrate from spilling from the dispenser, due to e.g. bumping by cows.

The dispenser is robust, compact, and is fully enclosed. It supports different types of motors. However, the instructions in this manual focus on the RIM motor. This 24 V AC/DC electric motor does not contain sliding contacts and is therefore wear-free. A microcontroller converts the AC/DC time pulse into a DC rotary pulse. This increases the power and allows for a more precise control of the electric motor. In addition, the motor is short-circuit proof and has an overvoltage protection to prevent damage to the electric motor and the control unit in the event of current overload. Other suitable motors are optionally available.

The information in this manual is aimed at farmers and technicians.

- Dairy farmers use the information to test and adjust the Black-V.
- Technicians use the information to install and set up the Black-V.

2. Safety

2.1 Introduction

The safety alert symbol identifies important safety messages on your Black-V and in the manual. When you see this symbol, be alert to the possibility of personal injury or death. Follow the instruction of the safety message.



Safety alert symbol

2.2 Signal words

Note the use of the signal words **CAUTION** and **DANGER** with the safety messages. The signal word for each message uses the following guidelines:



Caution! *Indicates a potentially hazardous situation that, if not avoided, could result in injury or damage of equipment or surroundings.*



Danger! *Indicates an imminently hazardous situation that, if not avoided, will result in death or serious injury.*

2.3 Safety instructions

You are responsible for the safe operation and maintenance of your Black-V. You must make sure that you and anyone else who is going to operate, maintain or work in the vicinity of the Black-V, knows all the related safety information in this manual.

You are the key to safety. Good safety practices protect you and the people around you. Make these practices a working part of your safety program. Make sure everyone who operates, maintains or works near the Black-V obeys the safety precautions. Do not risk injury or death by ignoring good safety practices.

- Black-V owners must train operators before they operate the Black-V. This training must be repeated at least annually.
- The operator must read, understand and obey all safety and operation instructions in this manual.
- Persons who have not read and understood all safety and operation instructions are not permitted to operate the Black-V.
- Do not modify the equipment in any way. Unauthorized modification may impair the function and/or safety and could affect the life of the equipment, and persons.
- Only use approved spare parts, and make sure they are installed by authorized technicians only.

2.3.1 General safety

- Make sure you have read and understood the manual and the safety instructions before you connect the power supply to operate or adjust the Black-V, or before you disconnect it to perform maintenance.
- Only trained persons are permitted to operate the Black-V.
- Install all covers and guards before putting the Black-V into operation.
- Wear proper protective clothing and equipment.
- Before cleaning or servicing the Black-V, disconnect the electrical power supply to the Black-V by removing the plug from the wall socket.
- Make sure you have the emergency phone numbers in your area at hand.
- Contact your milking equipment dealer if you have any questions.
- Review safety related items with all operators frequently (annually).

2.3.2 Electrical safety

- Only authorized electricians are permitted to install the electrical power supply for the Black-V.
- Make sure the electrical grounding of the electrical system and all parts of the Black-V meet the local rules and regulations.
- Replace any damaged electrical lines, conduits, switches and components immediately.
- Isolate or switch off the electrical power supply before you open the Black-V to work on the electrical system.

2.3.3 Installation safety

- Read and make sure you understand the instructions in this manual.
- Check that the Black-V has been installed correctly, as described in the manual.

2.3.4 Operating safety

- Make sure you have read and understood the manual and the safety instructions before you connect the power supply to operate or adjust the Black-V, or before you disconnect it to perform maintenance.
- Only trained persons are permitted to operate the Black-V.
- Before cleaning or servicing the Black-V, disconnect the electrical power supply to the Black-V.
- Close the motor cover and install additional guards before putting the Black-V into operation.
- Keep hands, feet, hair and clothing away from all the electrical parts.
- Keep unauthorized persons, especially small children, away from the Black-V at all times.
- Before the electrical supply is attached to the Black-V, make sure all parts are securely tightened and that all the cables and fittings are in good condition.
- Contact your milking equipment dealer if you have any questions.

2.3.5 Maintenance safety

- Make sure you have read and understood the manual and the safety instructions before you connect the power supply to operate or adjust the Black-V, or before you disconnect it to perform maintenance.
- Only trained persons are permitted to maintain the Black-V.
- Before cleaning or servicing the Black-V, disconnect the electrical power supply to the Black-V by removing the plug from the wall socket.
- Wear protective clothing and safety goggles when you work on the electrical system.
- Make sure to re-install all the covers and guards after maintenance work has been completed.

2.3.6 Safety warnings

- General safety warnings are shown in this safety warnings section. Specific safety messages can be found in applicable parts of this manual when potential hazards may occur if the instructions or procedures are not followed.

3. Installation instructions

General
The Black-V (fig. 2) is an electric feed dosing unit designed for dispensing concentrate feed. The Black-V is intended for use in out-of-parlour feeding stations and robot milking systems. Before connecting the Black-V to the existing control unit, consult the operation manual of that control unit first. In an out-of-parlour feed station, the electric dosing unit can be connected to the next available feed type slot of the feeding computer. To do so, follow the operation manual of the respective feeding computer. The order numbers and designations of the various individual parts of the Black-V can be found in the annex to this manual.

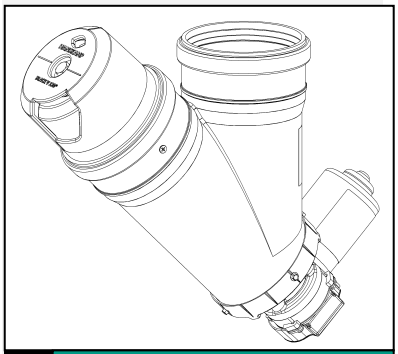

2 Black-V

Transport and storage
The Black-V is transported in a closed cardboard box. This carton is sealed with adhesive tape and covered inside with protection foil to prevent damage. The Black-V shall be stored in the same way. Multiple Black-V units can be transported on the same pallet.

Delivery specifications

Box contents:
1. 002-67*-0** Black-V anti-spill 24 V AC/DC

Options (see annex 7):
1. 001-793-000 Bracket for pipe, Ø 90 mm
2. 001-845-000 Mounting bracket, 3 mm
3. 001-846-000 Pipe mounting clamp M8, Ø 45 mm
4. 001-849-000 Outlet Black-V
5. 002-055-000 Storage container, 28 L

Caution! Always move the box very carefully!

Caution! Parts may fall out when unpacking the box. Always hold the box with the opening facing upwards!

Caution! Check the box for damages and for loose and protruding parts that could cause injuries!

Safety sticker(s)
The user and installer are responsible for the safe operation and maintenance of the Black-V. Safety stickers are used to ensure safety in and around the Black-V. These stickers must be placed correctly. On the Black-V, a single sticker showing several warnings is used (fig. 3). This sticker is to be placed on the Y-piece, which is connected to the concentrate storage container (see fig. 4). Make sure that the sticker is clearly visible.

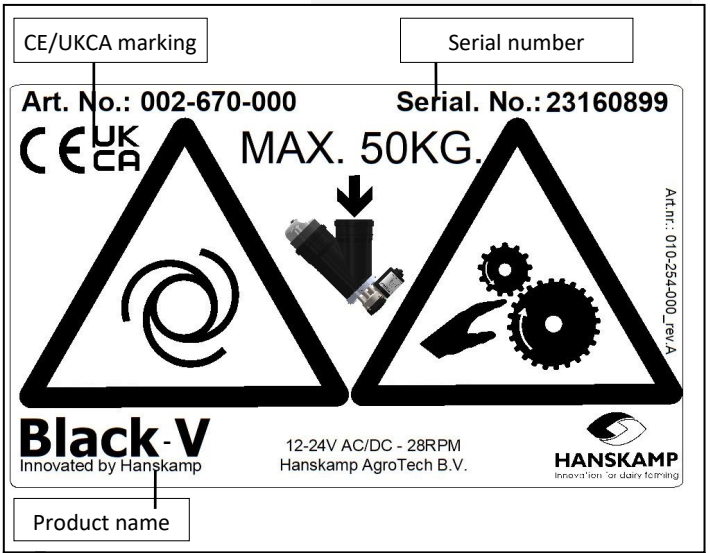

3 Safety sticker, displayed information can differ

Application of sticker(s)
- Clean and dry the surface to which the sticker is to be applied.
- Make sure that the surface temperature is above 5 °C.
- Determine the correct position of the sticker.
- Remove a small part of the foil on the backside of the sticker.
- Place the sticker on the surface and press a small part of the adhesive layer onto the surface.
- Carefully remove the foil and apply the whole sticker on the surface.
- If necessary, poke small air holes in the sticker with a needle and use the foil to smoothen the sticker.

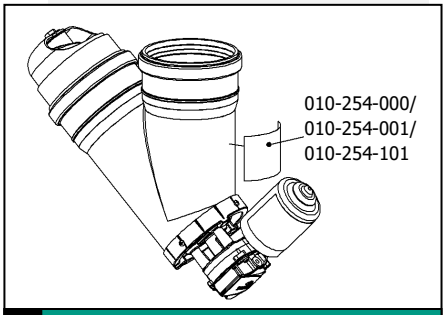

4 Position safety sticker

Sticker maintenance
- Keep the safety stickers clean and legible. Clean the safety stickers with water and mild soap. Do not use any solvents or abrasives that could damage the safety stickers.
- Replace missing or illegible safety stickers.

Safety stickers are available from Hanskamp. Please refer to the corresponding article numbers when ordering.

Installation

Before installation, check whether all parts are present using the parts list in the annex to this manual. See annex 5 and 6 (if applicable).

1. First determine where the Black-V should be installed, and at what height. It is recommended to mount the Black-V in or directly next to the feeding station. See annex 2 for dimensions of the Black-V. Mounting examples can be found at www.hanskamp.nl/en.

2. Connect the Black-V to a storage pipe or container with an outer diameter of 110 mm (see fig. 5), or to a Hanskamp storage container (art. no. 002-055-000).

3. Make sure that the power of the control unit is switched off. To do so, refer to the corresponding manual.

4. Connect the Black-V to the control unit using the appropriate cable. Connect the cable to the motor first. See annex 3 for the wiring scheme. Next, connect the other end of the cable to the output of the control unit. This can be the next free feed type slot of the feeding computer. The motor rotates counter-clockwise by default. See annex 4 for wiring schemes for *DeLaval Feed 2 / Alpro / Delpro* feed stations. For connecting the Black-V to other control units, please refer to the corresponding manual.

Caution! Make sure to properly conceal and secure the wiring out of the reach of the animals to avoid possible dangerous situations.

Danger! The Black-V is now under electrical voltage!

5. The Black-V is actuated completely electrically. The motor drives an auger that transports the feed. When connecting the dispenser, pay attention to the maximum allowable amperage, as indicated on the power source. Furthermore, note the maximum allowable supply pressure on the dispenser (50 kg).

Caution! The pressure exerted by the concentrate on the auger must not exceed 50 kg.

6. Install the dosing disc at the end of the auger in such a way, that the hole of the disc is positioned at the top side after dispensing a portion of concentrate feed. That way, concentrate is prevented from spilling out of the feeder. Follow the steps below to do so:

   - Hold a test transponder in front of the receiver of the feeding computer to make the dispenser run briefly.
   - When the dispenser has stopped rotating, disconnect the feeding computer from the power supply to prevent the dispenser from turning unexpectedly.
   - Loosen the bolt that is holding the dosing disc in place, and rotate the dosing disc so that the hole is facing upwards (fig. 6).
   - Fasten the bolt again to firmly secure the disc to the auger.
   - Reconnect the power supply of the feeding computer.

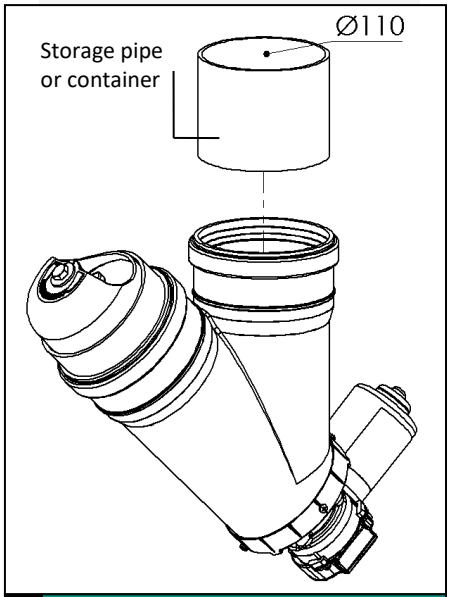

5 Storage pipe for Black-V

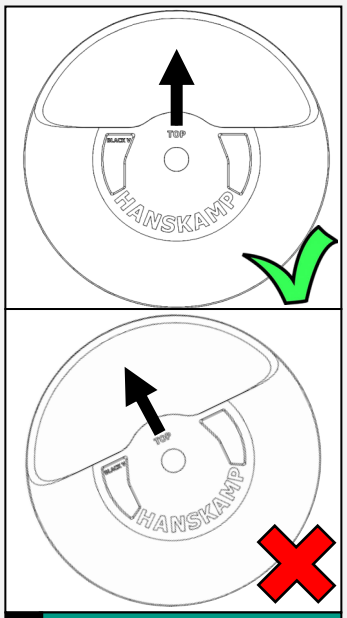

6 Orientation dosing disc

7. The 120° version of the Black-V uses a different dosing disc. This dosing disc must be installed at the end of the auger in such a way, that the opening of the pipe is blocked again after dispensing a feed portion. To adjust the disc, loosen the bolt in the middle of the disc. Turn the disc until the Hanskamp logo is clearly visible in the recess of the pipe (fig. 7). Then tighten the bolt again.

Caution! Before adjusting the dosing disc, always switch off the power supply first.

7

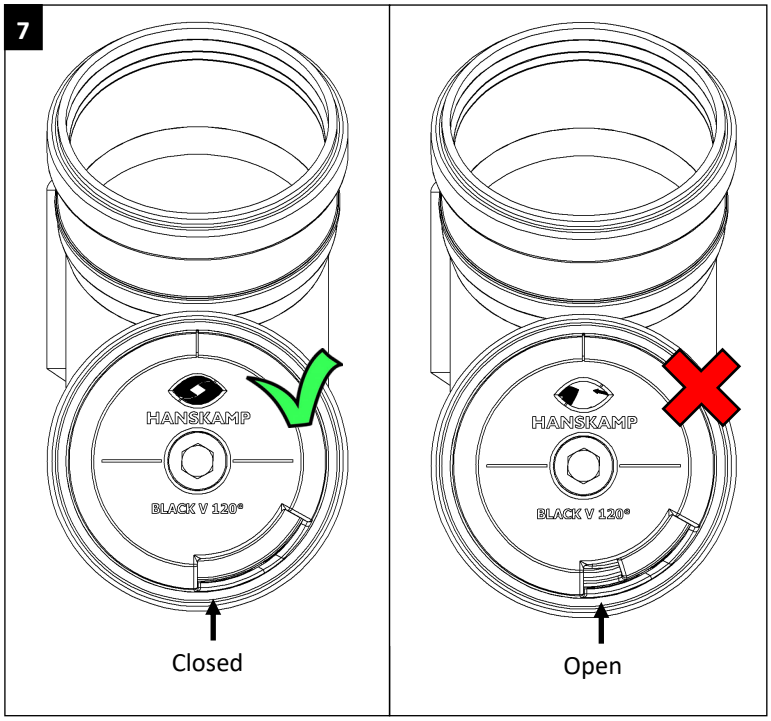

Calibration
Calibrate the Black-V by following the steps below, depending on your feeding system:

1. Access the calibration menu of your corresponding feeding system. Read the corresponding manual or consult your dealer, if necessary. See the table on the right to access the calibration menu of *DeLaval VMS* and *Alpro* feed stations.

To weigh and measure the correct portion weight, proceed as follows:
2. Place a bucket under the dispenser to weigh the feed.
3. Hold the test-tag of the corresponding feed type in front of the tag reader to dispense feed for 1 minute.
4. Weigh the collected amount of feed and record the weight.
5. Repeat steps 3 and 4 twice to conduct a total of three measurements.
6. Calculate the average weight by dividing the total amount of feed by 3.
7. Enter this value for the corresponding feed type in the feed computer or the milking robot software.

Repeat these calibration steps every month, as well as after refilling the storage, and after changing the feed type.

Accessing DeLaval calibration menu

DeLaval VMS:
- VMS menu ↓
- Station ↓
- Maintenance ↓
- Calibrate feed station

DeLaval Alpro feed station:
- Main menu ↓
- Settings(4) ↓
- Feed station(1) ↓
- Calibration data(3)

Setting DeLaval VMS menu

Computer (Delpro software):
- Unit ↓
- Select: VMS ↓



Feeding; Stop feeding, as soon as this number of teats is still being milked → set to 3.

Optional setting
To ensure that no feed is left in the feeding trough of the milking robot, feed dispension can be stopped as soon as one udder quarter is milked empty. This ensures that the cow eats her last portion completely. See the table on the right to set this option in the *DeLaval* milking robot program (*Delpro*). To set up other robotic milking systems, refer to the corresponding user manual or contact your milking equipment dealer.

Caution! The motor of the Black-V starts as soon as it is actuated by the control unit. The starting of the motor can not be recognized beforehand.

Maintenance
1. In case of maintenance, prevent the control unit to which the Black-V is connected from starting unexpectedly. Make sure that the unit is completely de-energised! To do this, disconnect the power supply of the control unit.

2. It is recommended that repairs and maintenance work be carried out by a specialist.

3. Never open the casing while the Black-V is still in operation, as there is a risk of electric shock or of getting caught in the auger.

4. The user/owner of the Black-V is required to follow the advice and instructions of this manual to ensure the safety of all involved. If these requirements are not fulfilled, the manufacturer cannot be held accountable in any way for personal injury or damage to or caused by the product.

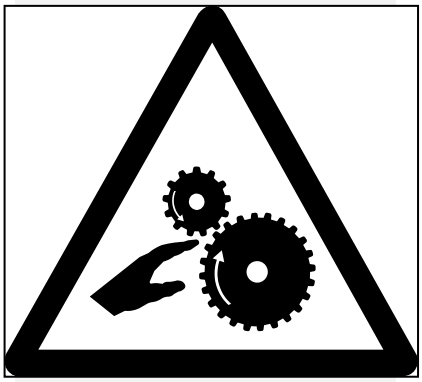

Caution! In order to prevent accidents, make sure to disconnect the power supply when making changes or performing maintenance on the Black-V.

Disassembly
In case of disassembly, all parts must be separated according to material type and must be disposed of via the proper type of waste management systems.

Caution! Disconnect the Black-V from the power supply before disassembly.

List of amendments included in this installation and operation manual

Nr.	Release date	Chapter(s)	Comments
1.1	06/2016		First release
1.2	07/2016		Addition of dimensions Black-V models
1.3	09/2017		Addition of FAQ
1.4	12/2017		Addition of 500 g/min version (120°)
1.5	12/2018		Addition of 15 g powder version
1.6	03/2022		15 g & 50 g converted to 10 g & 30 g
1.7	01/2023	Pages 7 + 13	UKCA logo added

Warranty limitations
The warranty excludes costs and expenses due to:

- Use of the unit for purposes other than intended, non-compliance with the specifications in this installation and operation manual;
- The consequences of any interventions by engineers other than the engineers recognised and approved by Hanskamp for carrying out service, maintenance and other technical work;
- Incidents such as freezing, ice, fire, flooding, inundation or any other form of extreme water damage, and lightening;
- Defects in the electrical system or earthing system;
- Damage to the electrical system caused by vermin, etc.

The warranty is not applicable to consequential damage that is not related to the machine itself. All systems have been tested. However, in the event of faults, Hanskamp cannot be held responsible for consequential damage.

Copyright and disclaimer
The information in this publication is intended for information purposes only and is not intended as sales quote. Products may differ from the illustrations. References to brands and/or products in this installation manual are solely for identification purpose. The company names and product names mentioned in the catalogue are trademarks of their respective owners. No part of this publication may be reproduced or transmitted without the prior written consent of Hanskamp AgroTech BV. Although this publication has been compiled with the utmost care, Hanskamp AgroTech BV is not liable for any damage that may result from errors or omissions in this publication. The Dutch installation and operation manual is the original installation and operation manual. Translations into other languages than Dutch use the Dutch installation and operation manual as source document. Hanskamp AgroTech BV accepts no liability for differences between translations. If there are any doubts about the content and the accuracy of the translated installation and operation manual, the Dutch installation and operation manual is the authoritative document.

4. FAQ

Problem	Possible cause	Solution
No feed dispensing.	Blockage by wood or plastic, for example.	Disconnect the power supply to the motor and wait until the LEDs have gone out. Remove the auger from the Black-V and empty the Y-piece. Replace the auger. Then switch the power back on.
	No feed in the storage pipe.	Check the auger and the silo.
	Motor is not actuated.	Open the cover of the motor and check the LEDs on the motor PCB. Check the power supply and control unit.
Black-V is spilling.	Dosing disc has been adjusted incorrectly.	For readjustment of the dosing disc, see p. 8, step 6 or p. 9, step 7.
Black-V does not dispense the right amount.	Calibration is incorrect.	Calibrate the controller (see p. 10).

Error codes DeLaval

Error code	Possible cause	Solution
Motor keeps rotating in feeding station no.: ... The feedback LED of the RIM motor PCB flashes every 10 sec.	RIM motor rotates without being actuated. This may be caused by a short circuit.	Disconnect the power supply to the motor and wait until the LEDs have gone out. Check the wiring. Then switch the power back on. See service info 010-225-011 for the operation of the RIM motor.
	Feed pulse lasts longer than 10 min.	Disconnect the power supply to the motor and wait until the LEDs have gone out. Check the wiring and control on the part of the DeLaval unit. Then switch the power back on.
Motor is not rotating in feeding station no.: ... The feedback LED of the RIM motor PCB does not flash during a 1-minute pulse.	Blockage by wood or plastic, for example.	Disconnect the power supply to the motor and wait until the LEDs have gone out. Remove the auger from the Black-V and empty the Y-piece. Replace the auger. Then switch the power back on.

Declaration for completed machinery IIA
(According to Annex IIA of the Machinery Directive 2006/42/EC, for completed machinery)

We,
Hanskamp AgroTech BV
Broekstraat 17
7009 ZB Doetinchem
The Netherlands,

Authorised compiler(s) of the technical file:

H.J. Hanskamp,

declare entirely under our own responsibility that the products of the:

Black-V anti-spill series, type number(s) 002-670-000,
Concentrate feed dispensing unit for out-of-parlour VMS milking systems or milking parlours,

to which this declaration relates, conform(s) to the provisions of the following directive(s):

- Machinery Directive 2006/42/EC
- EMC Directive 2014/30/EU

The product(s) also conform(s) to the requirements of the following norm(s):

- NEN-EN-ISO 12100

If the Black-V is not connected and the prescribed safety regulations are not followed and complied with, this declaration of conformity becomes void, and no rights can be derived from it.

Doetinchem, The Netherlands, 22-03-2022 H.J. Hanskamp



Annex 1: Composition of Black-V article number

Art. No.: 002-672-000

Product group:

002-67x-xxx = Black-V

Motor:

0 = AC motor, no feedback (001-069-000, 6 rpm)
2 = RIM time-controlled (011-091-000, 10 rpm / 011-095-000, 28 rpm)
3 = IM motor (011-030-000, 10 rpm / 001-652-000, 28 rpm)
4 = DC SolidState 5 (001-669-000, 10 rpm / 011-021-000, 28 rpm)
5 = DC bare motor, not anti-spill (001-663-000)
6 =
7 = IM pulse-controlled (011-125-001, 10 rpm / 011-125-000, 28 rpm)

Type auger:

0 = pellets
1 = powder (5 g - 12 g/min)

Product designed for:

1 = Out of Parlour Feeder
2 = VMS robot / Milking parlour
3 = Lely A4 / A5
4 = GEA Monobox / R9500

Version:

0 = 28 rpm (800 g/min) 360°
1 = 10 rpm (240 g/min) 120°

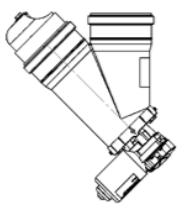

002-672-010 DeLaval OoPF (800 g/min)

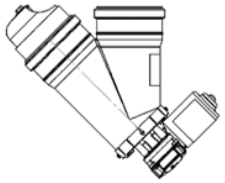

002-673-020
002-674-020

002-672-020 DeLaval VMS (800 g/min)

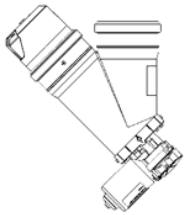

002-672-011 DeLaval OoPF (240 g/min)
002-677-111 Lely Cosmix (powder)
002-677-111 Lely A3 powder (+ PowerUnit air controlled 002-851-000)

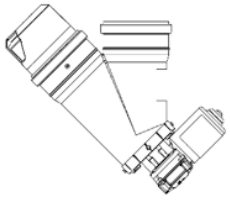

002-673-021
002-674-021

002-672-021 DeLaval VMS (240 g/min)

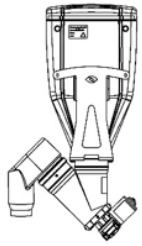

002-677-031
002-677-131 Lely A4 / A5

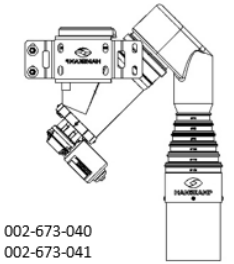

002-673-040
002-673-041
002-673-141 GEA Monobox / R9500

Version May 2022

Annex 2A: Dimensions Black-V 30 g (in mm)

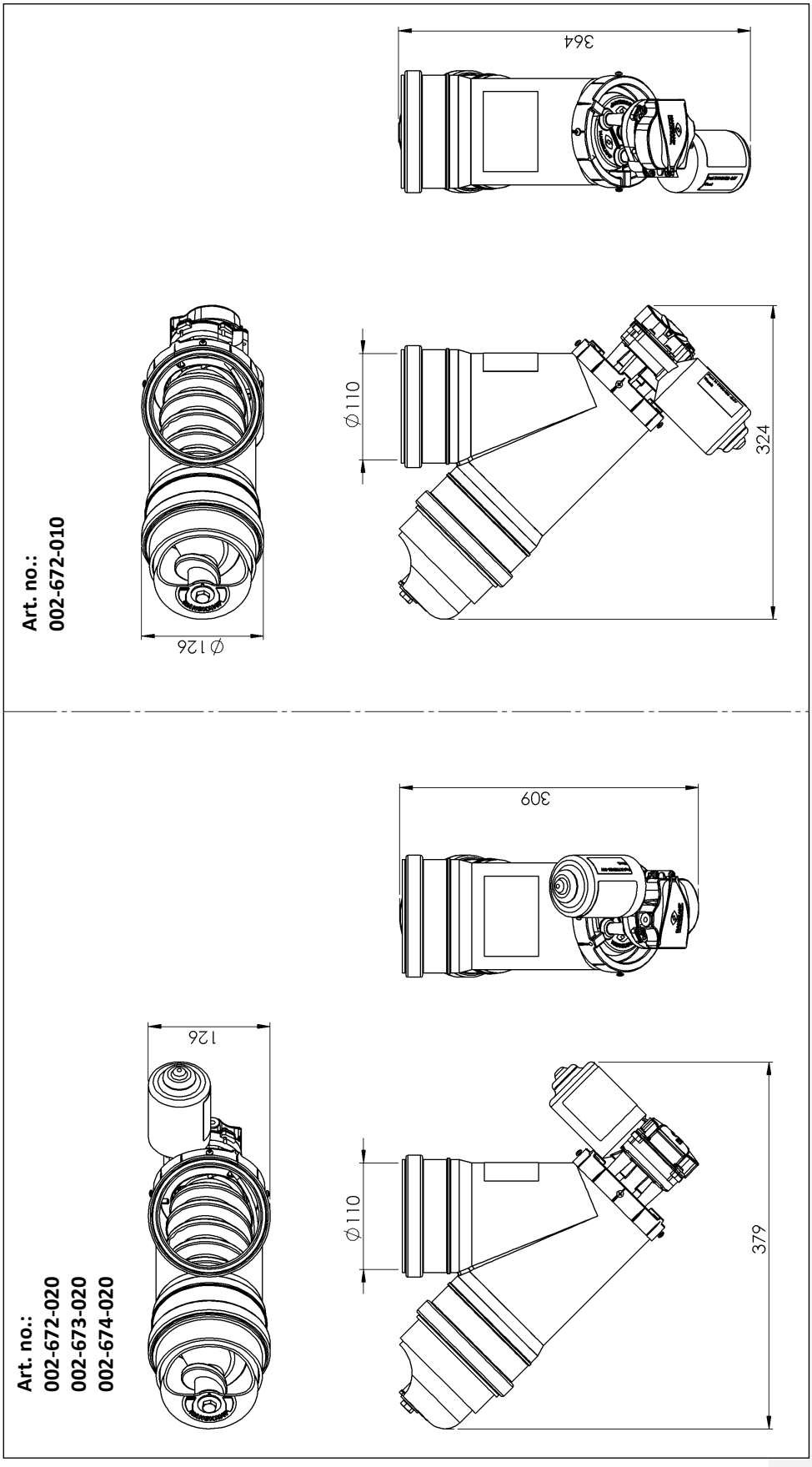

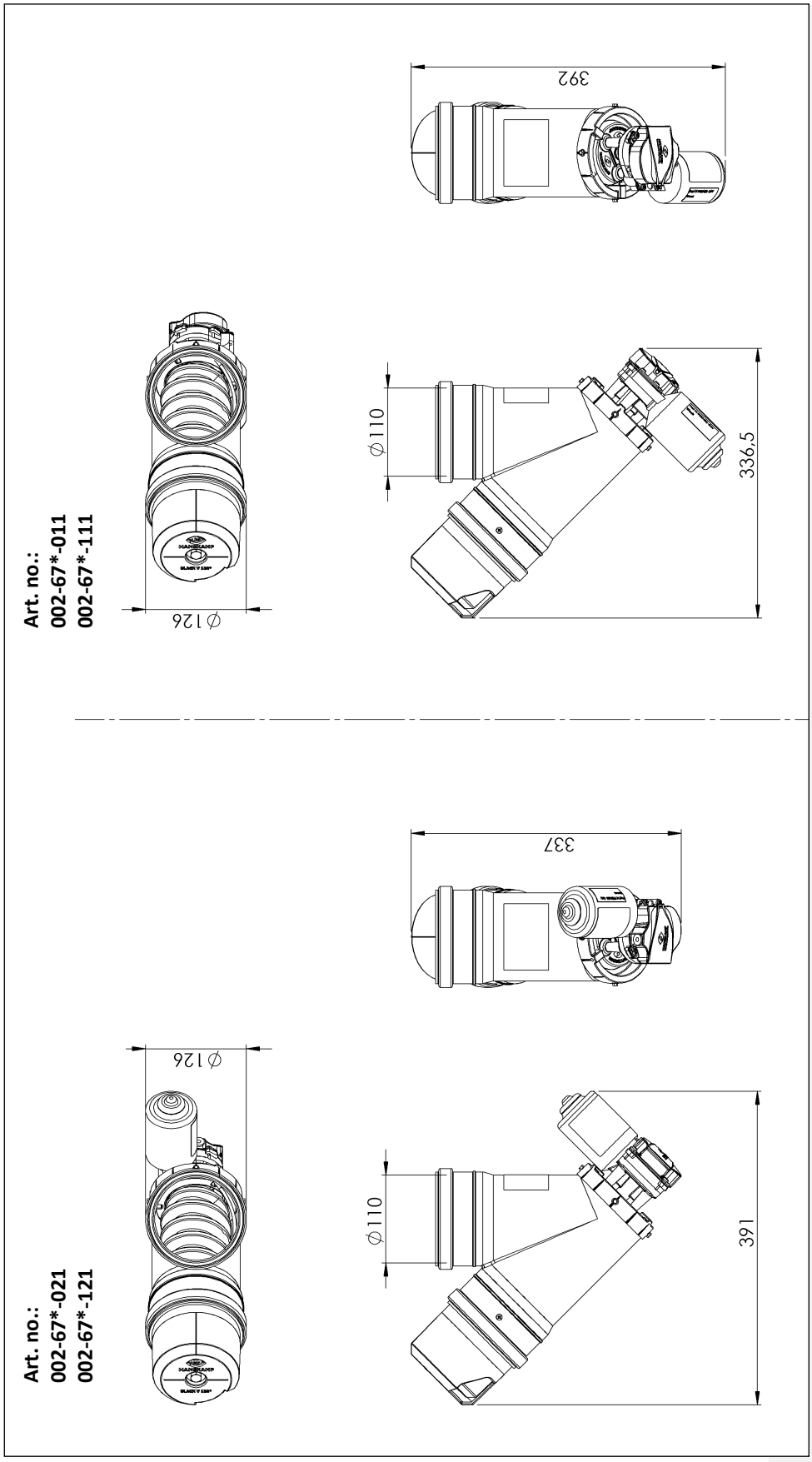

Annex 2B: Dimensions Black-V 5 g & 10 g (in mm)

Annex 3: Schematic representation of the circuits, connections and technical data of the RIM motor

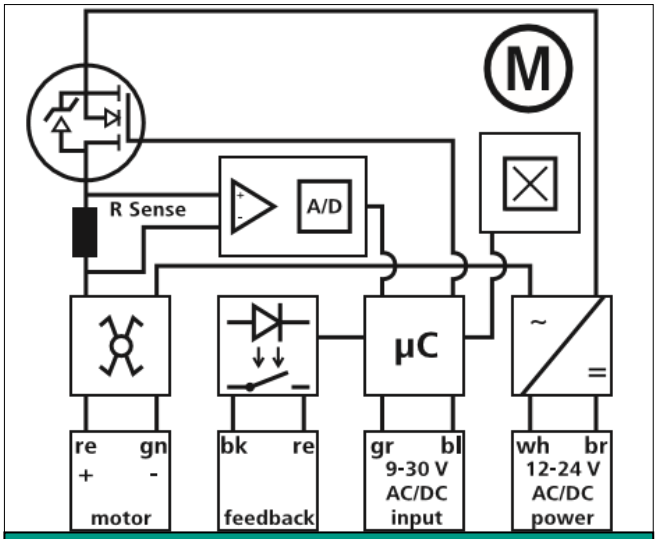

Schematic diagram of RIM motor circuits

Overview connections of RIM motors 011-095-000 & 011-091-000							
MOTOR		**FEEDBACK**		**INPUT**		**POWER**	
red	green	black	red	grey	blue	white	brown

Technical data	
Supply voltage	12-24 V AC/DC
Idle current	350 mA
Nominal current	360 mA
Maximum current	440 mA
Capacitor	22 µF
Electric motor	10/28 rpm
Capacity	240 - 800 g/min
Storage capacity	Max. 50 kg
Rotating direction auger	Counter-clockwise

Annex 4: Wiring scheme for DeLaval Feed2 / Alpro / Delpro StationController

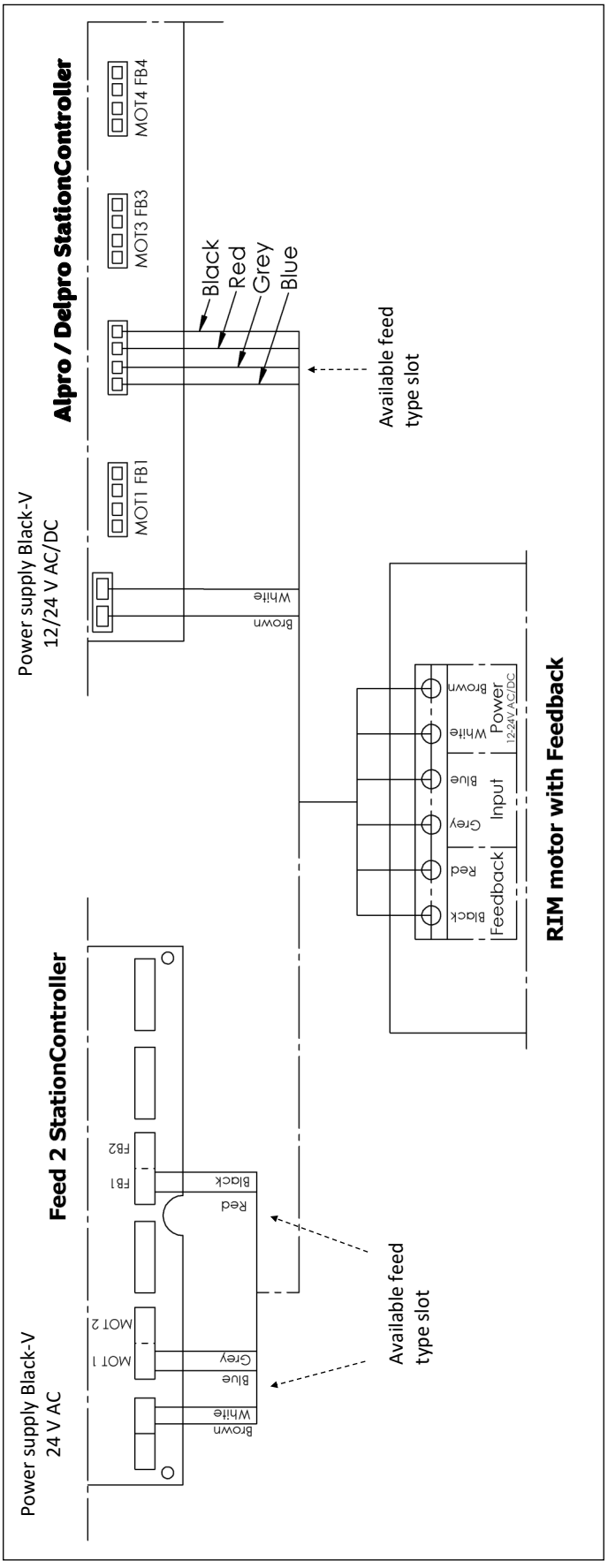

Annex 5A: Individual parts Black-V 800 g/min

For maintenance or other purposes, individual parts can be reordered through your milking equipment dealer.
When doing so, please refer to the article numbers as indicated in the drawing below.

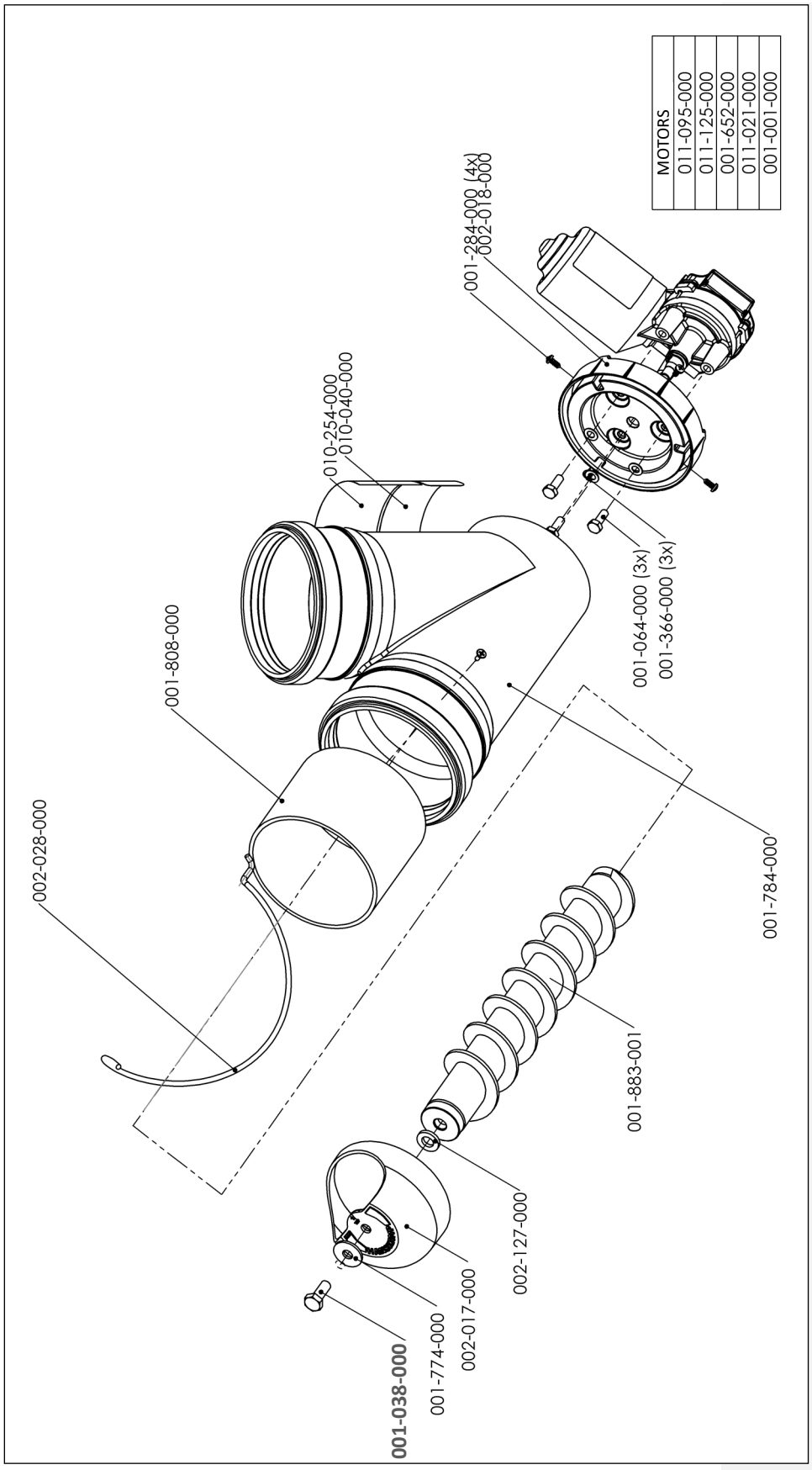

Annex 5B: Individual parts Black-V 5 g & 10 g

For maintenance or other purposes, individual parts can be reordered through your milking equipment dealer.
When doing so, please refer to the article numbers as indicated in the drawing below.

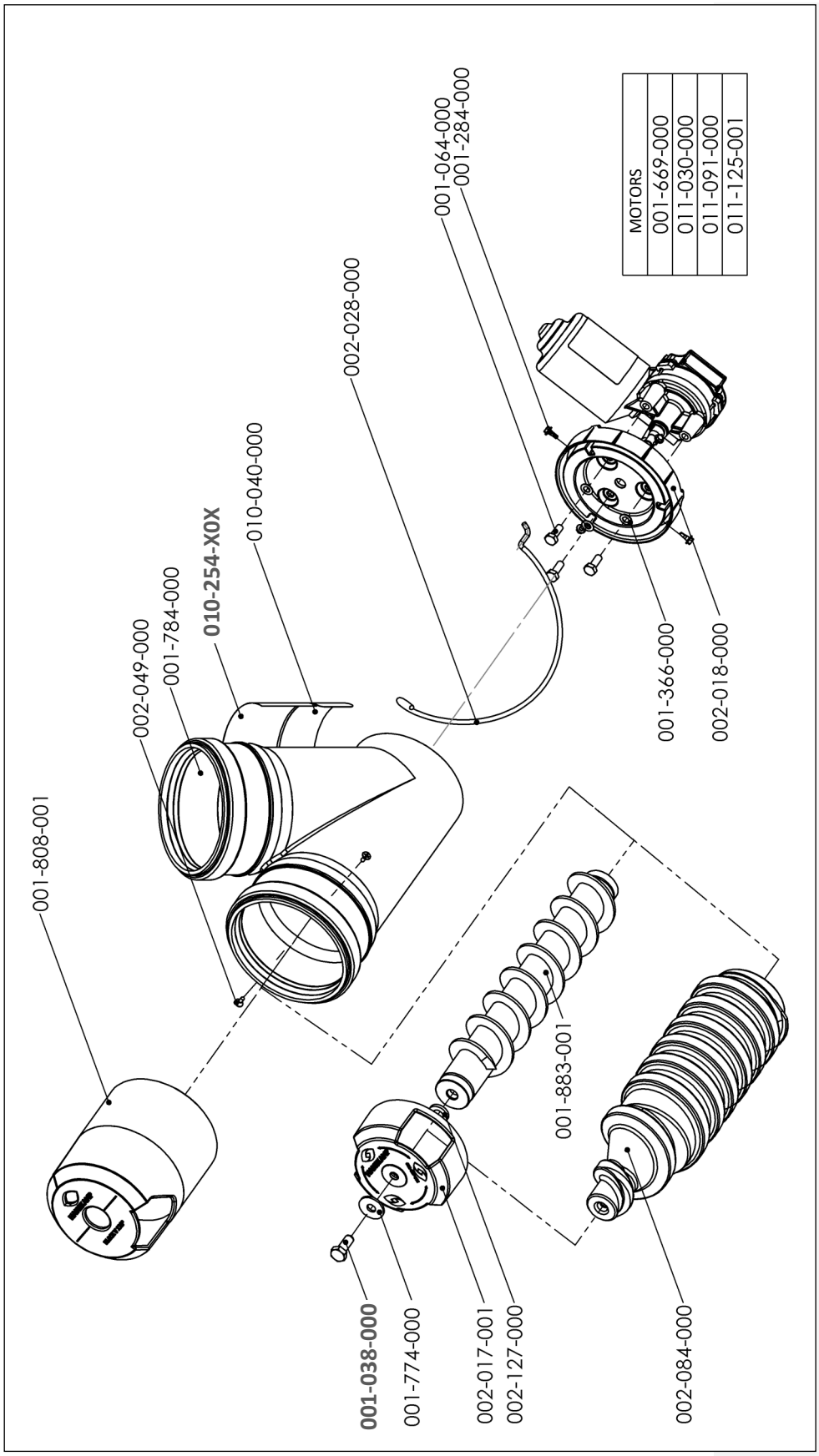

Annex 6: Description of parts Black-V 30 g

Article number	Description	Quantity
001-038-000	Bolt M8 x 20	1
001-064-000	Bolt M6 x 16 DIN 931	3
001-284-000	Self-tapping screw, 3.5 x 9.5 mm	4
001-366-000	Spring wave washer M6 A2 DIN 137B	3
001-774-000	Washer M8 DIN 9021 A2	1
001-784-000	T-piece 45°, 110 mm, PP, black	1
001-808-000	PVC pipe, 110 x 3.2 mm, 87 mm, black	1
001-883-001	Auger Black-V, steel	1
002-017-000	Dosing disc, plastic	1
002-018-000	Motor mounting plate for Black-V anti-spill	1
002-028-000	Guiding spiral, Ø 4 mm, stainless steel	1
002-127-000	Rubber ring, anti-slip	1
010-254-000	Safety sticker Black-V	1
010-040-000	Label with article number	1
011-095-000	RIM motor, 28 rpm, time-controlled *(variable)*	1

Description of parts Black-V 5 g & 10 g

Article number	Description		Quantity
001-038-000	Bolt M8 x 20		1
001-064-000	Bolt M6 x 16 DIN 931		3
001-284-000	Self-tapping screw, 3.5 x 9.5 mm		4
001-366-000	Spring wave washer M6 A2 DIN 137B		3
001-774-000	Washer M8 DIN 9021 A2		1
001-784-000	T-piece 45°, 110 mm, PP, black		1
001-808-001	PVC pipe with hole, for Black-V 120°, black		1
002-017-001	Dosing disc for Black-V anti-spill 120°, plastic		1
002-018-000	Motor mounting plate for Black-V anti-spill		1
001-883-001	Auger Black-V, steel	*10 g*	1
002-028-000	Guiding spiral, Ø 4 mm, stainless steel		1
002-049-000	Metal screw, 3.5 x 12 mm A2, cross recess		2
002-084-000	Auger for powder, counter-clockwise, plastic	*5 g*	1
002-127-000	Rubber ring, anti-slip	*10 g*	1
010-254-001	Safety sticker Black-V, 10 rpm	*10 g*	1
010-254-101	Safety sticker Black-V, 10 rpm, powder	*5 g*	1
010-040-000	Label with article number		1
011-091-000	RIM motor, 10 rpm, time-controlled *(variable)*		1

Annex 7: Accessories

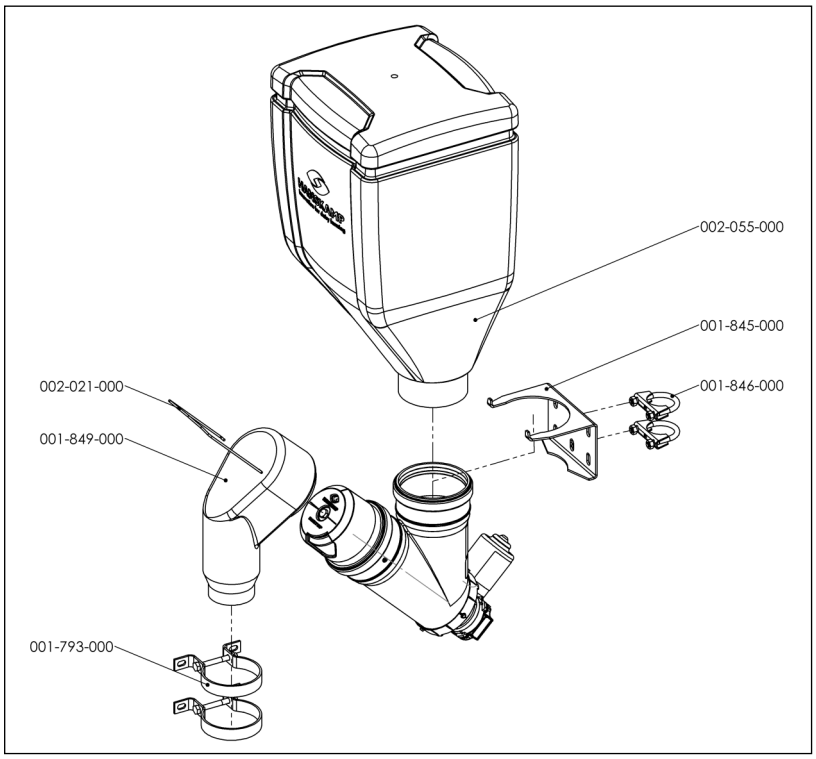

Article number	Description	Quantity
001-793-000	Bracket for pipe, Ø 90 mm, stainless steel	2
001-845-000	Mounting bracket, 3 mm	1
001-846-000	Pipe mounting clamp M8, Ø 45 mm	2
001-849-000	Outlet Black-V	1
002-055-000	Storage container, 28 L - 17 kg, white	1
002-021-000	Bracket for outlet	1

Optional motors for Black-V

Article number	Description	Fits in system	Quantity
011-095-000	RIM motor, time-controlled	DeLaval	1
011-125-000	IM motor, pulse-controlled	Lely A4 & A5	1
001-652-000	Intelligent Motor	Milking parlour (incl. DeLaval, SAC, Fullwood, BouMatic)	1
011-021-000	SolidState 5	Nedap	1
001-001-000	Dosing motor, grey	GEA/Westfalia	1

Optional motors for Black-V 120°

Article number	Description	Fits in system	Quantity
011-091-000	RIM motor, time-controlled, 10 rpm, 120°	DeLaval	1
011-125-001	IM motor, pulse-controlled, 10 rpm, 120°	Lely A4 & A5	1
011-030-000	Intelligent Motor, 10 rpm, 120°	Milking parlour (incl. DeLaval, SAC, Fullwood, BouMatic)	1
001-669-000	SolidState 5, 10 rpm, 120°	Nedap	1

Hanskamp AgroTech BV
Broekstraat 17
7009 ZB Doetinchem
The Netherlands
Tel: +31 (0)314 - 393 797
Fax: +31 (0)314 - 393 826
www.hanskamp.nl/en

Stay up to date: