V1.1 12-2025
010-408-000

Service Info - 004-355-000 Reed Contacts T'port

Explanation of setting up and mounting a position sensor to prevent unwanted movement

This set is designed to reduce disturbance and prevent feed theft from the front via the T'port gate.

Requirements: 2 x art. no. **004-101-002**, REED NO sensor, T7 SQUARE 2 wires, 5 m.
Spider version **V3.8.30** or higher, CowToilet **V233** or higher.

2 Connect in the control box of the T'port.

1 Install the reed contacts on the cover side of the cylinder to ensure a high signal when the T'port is closed.

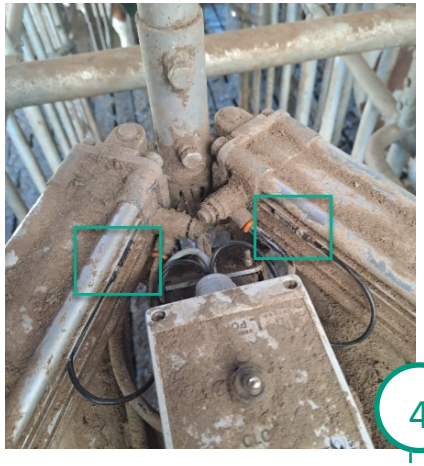



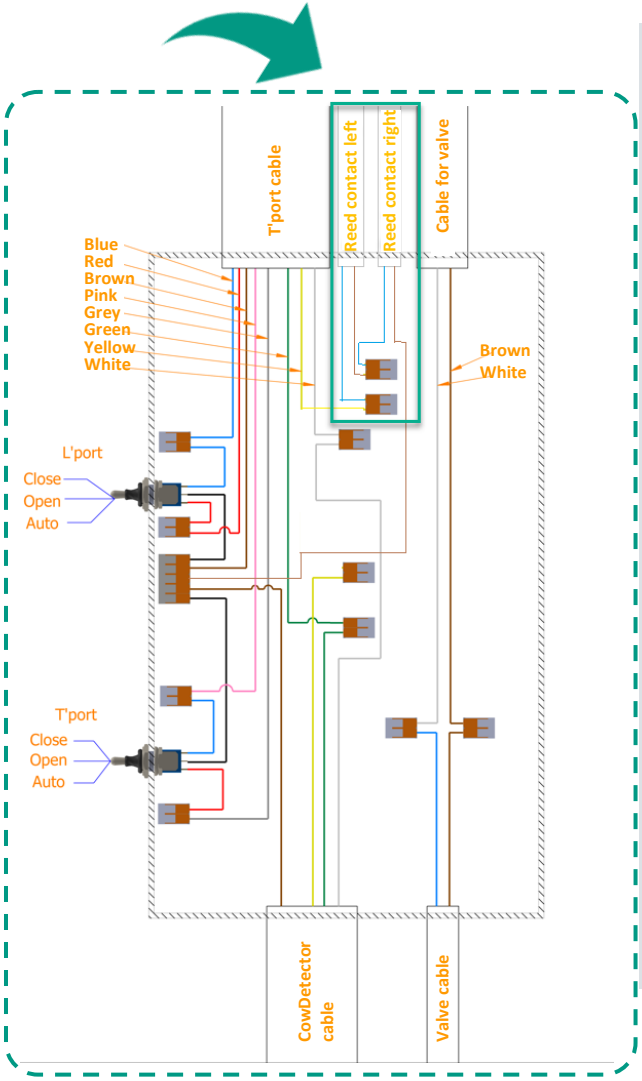

3 Activate and set the reed contacts in Spider:
Front gate sensor 0 = Off.
Timeout time = The time before the process is aborted.

4 For proper adjustment of the reed contacts, check via the LED on the CowToilet PCB at 'GatesControl' input 1.

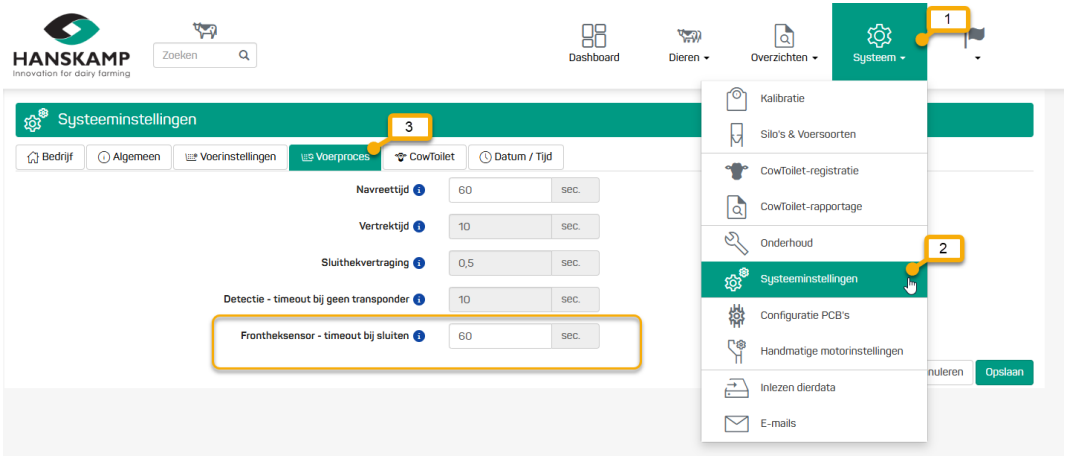

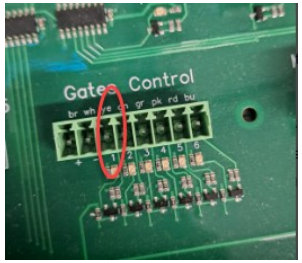

Hanskamp | Innovation for dairy farming
Xenonstraat 6
7031 HX Wehl
T + 31 (0)314 - 393 797
F + 31 (0)314 - 393 826
E info@hanskamp.com
I www.hanskamp.com

HANSKAMP
Innovation for dairy farming

V1.1 12-2025
010-408-000

Service Info - 004-355-000 Reed Contacts T'port

Explanation of setting up and mounting a position sensor to prevent unwanted movement

This set is designed to reduce disturbance and prevent feed theft from the front via the T'port gate.

Requirements: 2 x art. no. **004-101-002**, REED NO sensor, T7 SQUARE 2 wires, 5 m.
Spider version **V3.8.30** or higher.

1 Mount the reed contacts on the cover side of the cylinder, so that the signal is high when the T'port is closed.

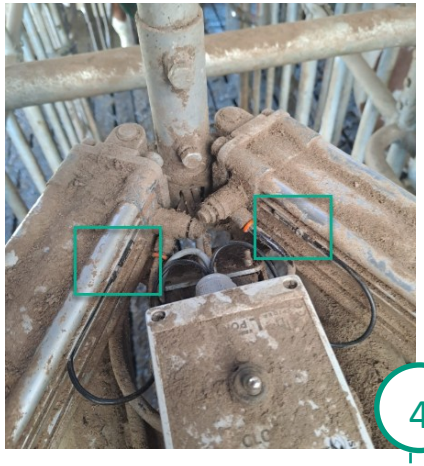



2 Connect in the control box of the T'port.

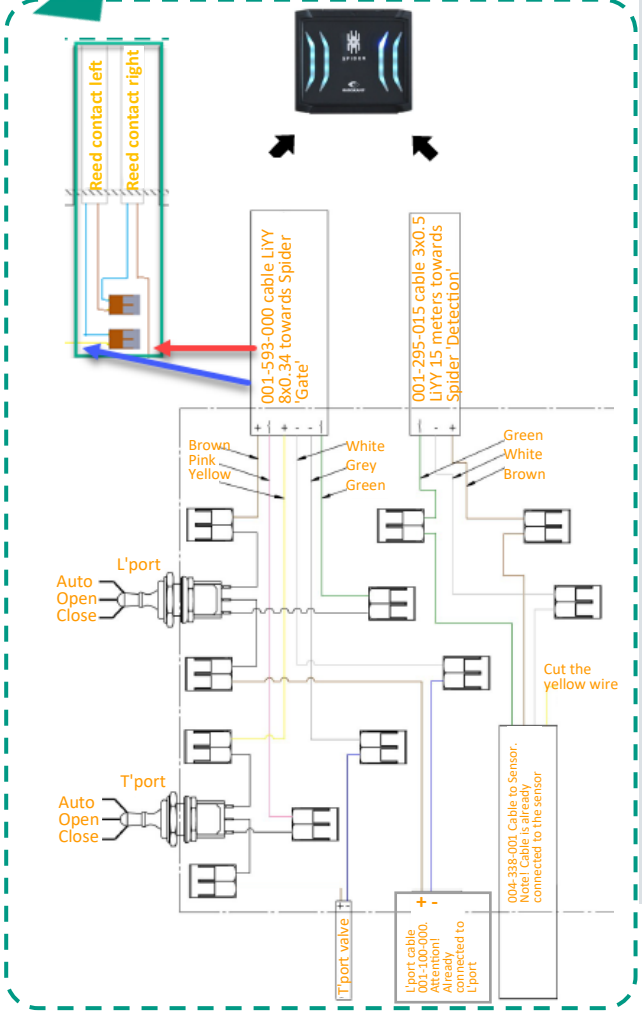

3 Activate and set the reed contacts in Spider: Front gate sensor 0 = Off.
Timeout time = The time before the process is aborted.

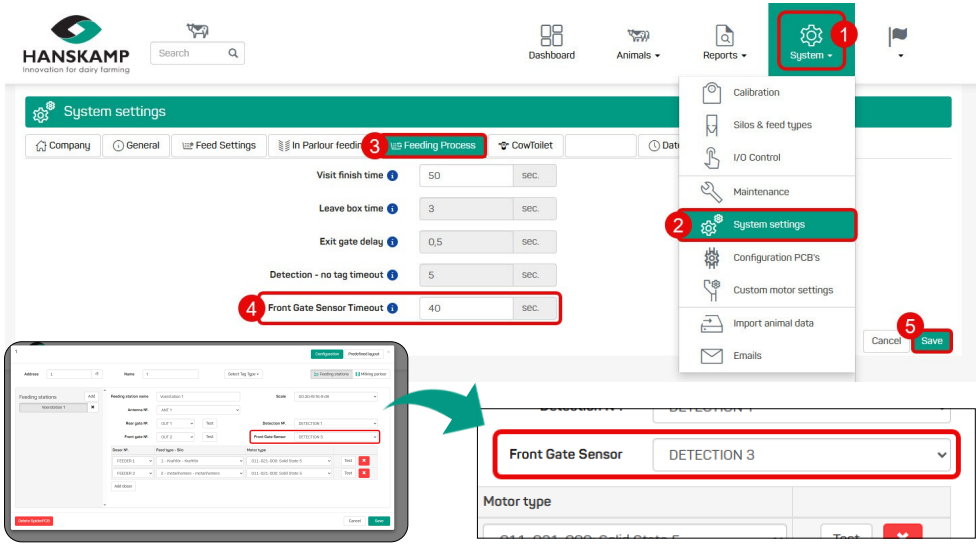

4 For proper adjustment of the reed contacts, check via the LED on the Spider PCB at the correct Detection input.

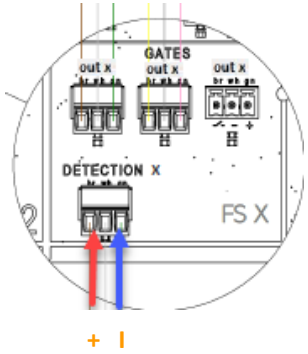

Hanskamp | Innovation for dairy farming
Xenonstraat 6
7031 HX Wehl
T + 31 (0)314 - 393 797
F + 31 (0)314 - 393 826
E info@hanskamp.com
I www.hanskamp.com

HANSKAMP
Innovation for dairy farming