V1.1 1-2026
010-391-000

Service info - 005-140-000 & 005-140-100

Explanation for setting up the wireless connection between SpiderServer and SpiderClient

Use this set to establish a stable network connection between your SpiderServer and your SpiderClient or multiple SpiderClients. This set is for outdoor use only.

No Spider Wi-Fi coverage at the SpiderClient? Then log in to the Wi-Fi of this point-to-point set:

Wi Fi : cpe710
: cpe710cpe710

Use the Spider app to open the Spider user interface.

1

Choose a suitable location near the SpiderServer to place the antenna dish (AP). Then place the antenna dish (STA) at the SpiderClient. Ensure that the antenna dishes have a clear line of sight to each other. With multiple SpiderClients, it is also possible to connect wirelessly by adding an extra STA transmitter.

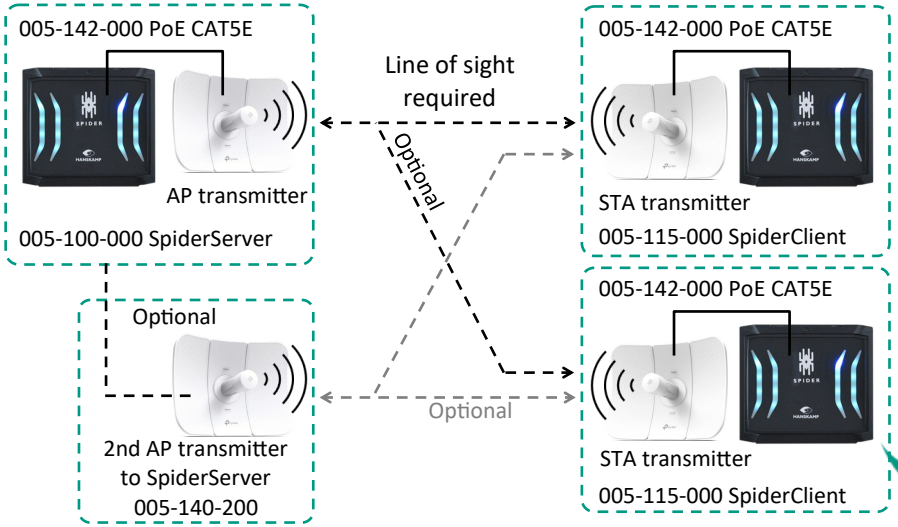

2

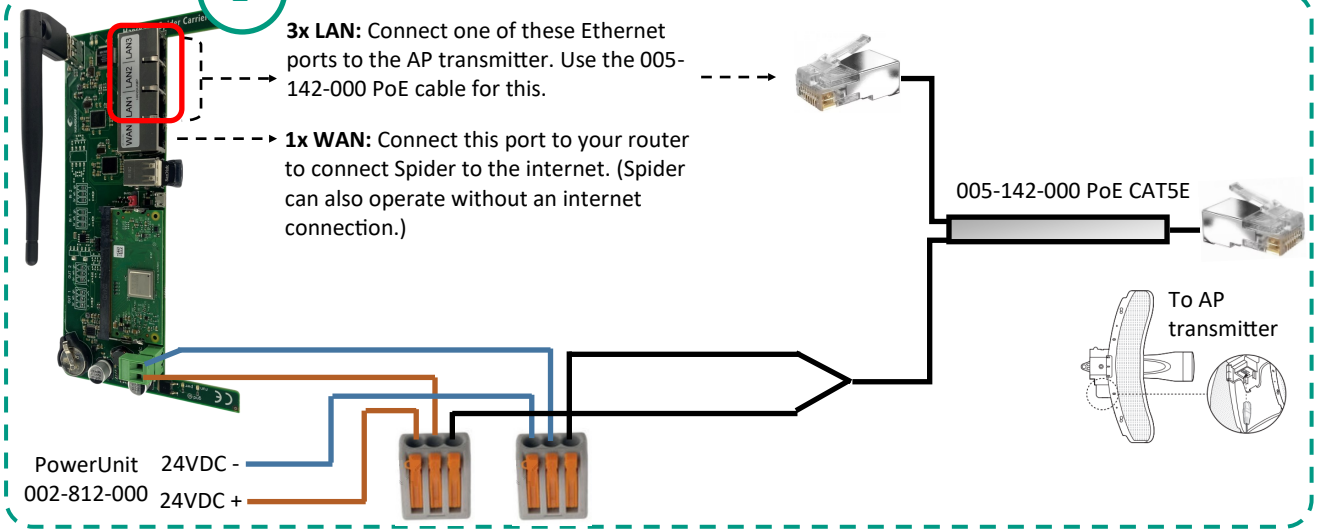

3

LAN Client: connect to another STA transmitter.

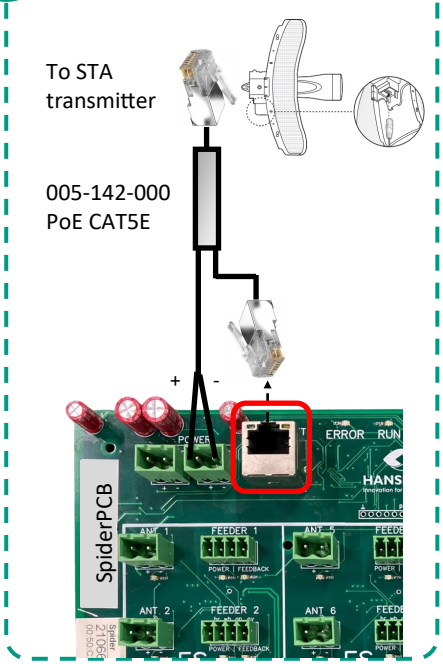

Questions? Contact your dealer or **Hanskamp Service:**

0031 314 393 797
0031 618 486 642
service@hanskamp.nl

Hanskamp | Innovation for dairy farming
Xenonstraat 6
7031 HX Wehl
T + 31 (0)314 - 393 797
F + 31 (0)314 - 393 826
E info@hanskamp.nl
I www.hanskamp.com

HANSKAMP
Innovation for dairy farming

V1.1 1-2026
010-391-000

Service info - 005-140-000

Explanation for setting up the wireless connection between SpiderServer and SpiderClient

FAQ

- The 005-140-000 set is only to be used between SpiderServer and SpiderClient(s). This product is specially configured for this purpose.

- The TP-Link CPE710 can also be used to connect the SpiderServer wirelessly to the home network (internet). **Hanskamp does not support this.** For more information, consult your local IT specialist.

- This 005-140-000 set cannot be used as an additional Wi-Fi point at the SpiderClient. If you still want this, please order article number 005-135-000.



- **005-140-000 AP transmitter Set of two (1× AP + 1× STA)**
- **005-140-100 STA transmitter (1 piece for expansion)**
- **005-140-200 AP transmitter (1 piece for expansion)**

Not required





005-142-000 PoE CAT5E



003-521-009 Wall bracket 1½” galvanized pipe

- **005-140-000 parts (2×)**

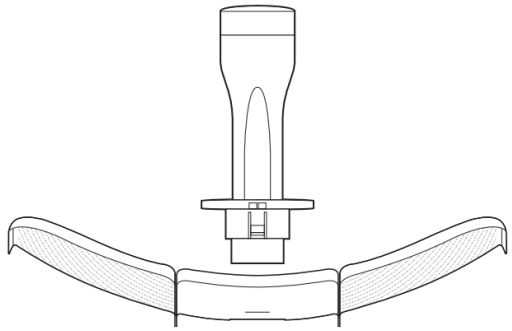

Reflective screen assembly

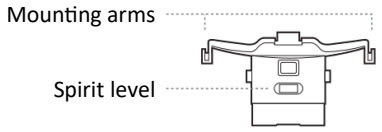

Rear cover

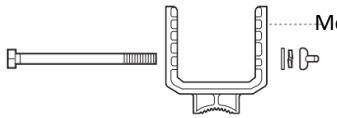



- **Connections Transmitter Unit**

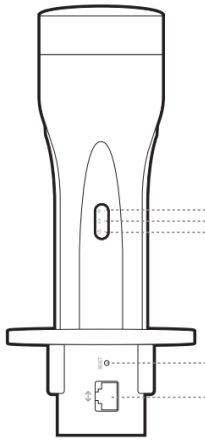

On: The wireless function is enabled.

On: The Spider is connected to the Ethernet port, but there is no activity.
Blinking: The Spider is connected and there is activity.

On: The transmitter has power.

RESET:
Hold this button for 5 seconds to reset the transmitter to factory settings.

Ethernet:
Connect this port to the LAN port of the CarrierBoard or to the LAN connection of the SpiderPCB.

Questions? Contact your dealer or **Hanskamp Service:**

0031 314 393 797

0031 618 486 642

service@hanskamp.nl

Specifications

- 867 Mbps AC 5GHz
- 23 dBi directional
- 2x2 MIMO antenna
- 15 kV ESD & 6 kV lightning protection
- IP65 weatherproof



Hanskamp | Innovation for dairy farming

Xenonstraat 6
7031 HX Wehl

T + 31 (0)314 - 393 797
F + 31 (0)314 - 393 826

E info@hanskamp.nl
I www.hanskamp.com

HANSKAMP
Innovation for dairy farming