ScaleUnit 005-190-000

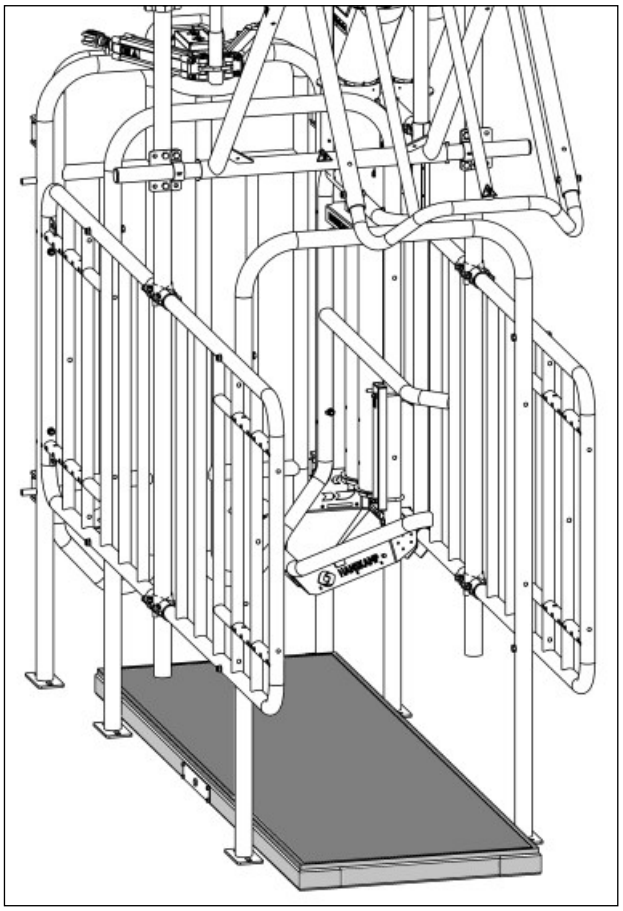

Weighing floor equipment for Spider
Weegvloerinrichting voor Spider
Wiegebodenausrüstung für Spider
Équipement de plancher de pesée pour Spider

Operating Instructions **EN**

HANSKAMP
Innovation for dairy farming

Item number: 010-370-000

Date: September 2026
Version 0.5 - Instructions - Original document

Wehl,
The Netherlands
www.hanskamp.com

Table of contents

Chapter	Description	Page
	Table of contents	**2**
	Foreword	**3**
1.	**Technical specifications and tolerances**	**4**
1.1	Specifications	4
2.	**Safety**	**5**
2.1	Instructions	5
3.	**Transportation**	**6**
4.	**Assembly, installation and commissioning**	**6**
4.1	Mechanical assembly	6
4.2	Electrical assembly	7
4.3	Adjusting software settings	8
4.4	Commissioning	9
5.	**Operation**	**9**
5.1	Reading weights	9
5.2	Resetting	9
6.	**Maintenance**	**10**
6.1	Preventive maintenance	10
6.2	Spare parts	10
6.3	FAQs	10
6.4	Version management	11
6.5	Dimensional drawing	12
6.6	Parts	12

Foreword

This manual is intended for anyone working with or on the ScaleUnit (the weighing floor). Before operating or performing any work on the ScaleUnit, please read this manual carefully. It contains essential instructions and guidance on using the ScaleUnit safely, efficiently, and correctly. The manual should always be available at the location where the ScaleUnit is in use.

This manual should be supplemented with instructions in accordance with applicable national regulations concerning accident prevention and environmental protection.

Supplier details if not supplied directly by Hanskamp AgroTech BV.

Name		Dealer stamp
Address		
Telephone number		
E-mail address		

Hanskamp AgroTech BV (hereinafter referred to as Hanskamp) guarantees that the ScaleUnit will function correctly for a period of 12 months from the date of delivery. Hanskamp is not liable for any consequential damage to buildings, machinery, or the surrounding environment, whether caused by the ScaleUnit or any other factor. Hanskamp continuously seeks to improve its products and services. Therefore, we reserve the right to change the specifications described in this manual at any time without prior notice.

The ScaleUnit is supplied under Hanskamp's general terms and conditions, available at **www.hanskamp.com**. Hanskamp is not responsible for direct or indirect damage resulting from operational errors, insufficiently qualified maintenance, or any use other than that described in this manual. Liability also ceases if modifications or extensions to the ScaleUnit are made by the user or third parties without Hanskamp's prior written consent.

The ScaleUnit is intended solely for use under the process and environmental conditions specified in the 'Technical specifications and tolerances' section of this manual. Any other use is not authorised and may pose a risk to the operator or the surrounding environment.

Warranty limitations
Costs and expenses resulting from the following are excluded from the warranty:

- Improper use of the equipment, not in accordance with the installation and operating instructions.
- The consequences of any intervention by mechanics other than mechanics approved by Hanskamp for carrying out certain work.
- Incidents such as frost, ice, fire, flooding, inundation, severe water damage, or lightning strikes.
- Defects in the electrical system or earthing.
- Damage to the electrical system caused by pests and the like.

The warranty does not apply to consequential damage unrelated to the ScaleUnit itself. All systems are tested prior to delivery; however, Hanskamp cannot be held liable for consequential damage in the event of a malfunction.

1. Technical specifications and tolerances

The Hanskamp ScaleUnit is an optional component within the Spider system, designed for the accurate weighing and recording of animals. The weighing floor can be connected to the Spider system via a network cable. The ScaleUnit is intended solely for use in professional industrial or agricultural environments.

Caution! The ScaleUnit must only be used within the specifications and tolerances stated in the order documentation, assembly drawing and this user manual. If the ScaleUnit is used outside these specifications, Hanskamp accepts no responsibility or liability for the proper operation of the system.

Caution! The ScaleUnit is intended solely for use as a weighing floor connected to a Hanskamp Spider system.

Caution! Do not use the ScaleUnit for any purpose other than that for which it was designed by Hanskamp. Improper use may result in damage to the system and may pose a risk to the user and the surrounding environment.

1.1 Specifications of the 005-190-000 ScaleUnit	
ScaleUnit power supply	Input: 12-24 VDC (brown = + I white = -) Output: Ethernet data signal Suitable for use with Hanskamp's Spider system
Limits for storage, transportation and use	0 … 40 °C Non-condensing RH
IP code	IP67
Cable	Supplied with 10 m (6 x 0.25 mm^2) cable as standard. The cable must NOT be shortened.
Materials	Galvanised frame with rubber top layer.
Floor dimensions (L × W × H)	2204 mm x 706 mm x 116 mm
Floor weight	Approx. 75 kg
Weighing range	1 kg to 1,000 kg (incremented in 0.5-kg steps)

Caution! Any existing stickers must not be removed.

2. Safety

Caution! The ScaleUnit has been manufactured in accordance with the latest state of the art and applicable safety regulations. However, improper use may result in hazardous situations for users and third parties, and may cause damage to the weighing floor or other property.

2.1 Instructions

1. Operation and maintenance of the ScaleUnit must only be carried out by qualified personnel, following the warnings on the weighing floor and the instructions in this user manual. Keep children and other unauthorized persons away from the ScaleUnit during operation.
2. The ScaleUnit is only suitable for the process and ambient conditions specified in the 'Technical Specifications and Tolerances' section of this manual. Any other use is prohibited. Improper use may pose a risk to the operator or the surrounding environment.
3. Modifying the ScaleUnit without prior written consent from Hanskamp is strictly prohibited.
4. Only a qualified electrician may install the power supply for the ScaleUnit. During installation, ensure animals do not have access to the cabling. Check that the electrical grounding of the system and all components complies with applicable local laws and regulations.
5. Install the ScaleUnit with sufficient space around it to allow safe operation, maintenance, and inspection.
6. Keep the working area clean and well-lit. Untidy or poorly lit areas may cause accidents.
7. Keep hands, hair, loose clothing, and jewellery away from moving parts of the system controlled by the ScaleUnit.
8. Do not remove any connections, covers, or safety devices while the ScaleUnit is powered. Only operate the ScaleUnit when all protective equipment and safety measures are in place and functioning correctly.
9. Never move the ScaleUnit while it is connected to the power supply.
10. Follow the prescribed intervals for periodic inspections and maintenance as indicated in this manual.
11. Maintenance and repairs must only be carried out by qualified personnel using original replacement parts.
12. Immediately replace any damaged electrical cables, cable covers, switches, or other components.
13. In addition to this manual, comply with all applicable statutory and binding regulations regarding accident prevention, occupational safety, and environmental protection. This includes the use of personal protective equipment (PPE).
14. Notify operating staff before performing maintenance. Always disconnect the power supply before cleaning, inspecting, or servicing the ScaleUnit.
15. If the ScaleUnit is damaged or does not function correctly, stop using it immediately. Resume operation only after the weighing floor has been repaired or replaced and its correct functioning verified. Contact your supplier if necessary.
16. At the end of its service life, the ScaleUnit and its components must be disposed of in accordance with local legislation and regulations.

3. Transportation

Caution! Follow all the instructions in this user guide, in particular the safety chapter.

Report damage during or immediately after delivery to the shipping company and to Hanskamp. Take all necessary measures to prevent further damage.

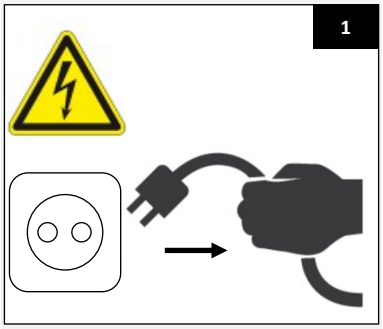

4. Assembly, installation and commissioning

Caution! Follow all the instructions in this user guide, in particular the safety chapter.

4.1 Mechanical assembly

Assemble this product in a way that leaves sufficient space for safe working, cleaning, maintenance, and inspections. Assembly examples can be found at **www.hanskamp.com**.

1. Deenergise the Spider completely (figure 1).
2. Place the weighing floor between the legs of the concentrate feed station. First check carefully where the cow stands, and position the weighing floor in the centre (figure 2).
3. Adjust the four feet of the weighing floor so that it is level in both directions (figure 3).
4. Stow away the cable neatly, out of the reach of the cow, and guide it to the Spider unit. Remove the cable connector to do so (figure 4).
5. Optionally, place the cable in a cable conduit (007-530-000) and secure it to the underside of the ScaleUnit using cable ties. This allows the cable to be routed to any desired exit position (figure 3a).

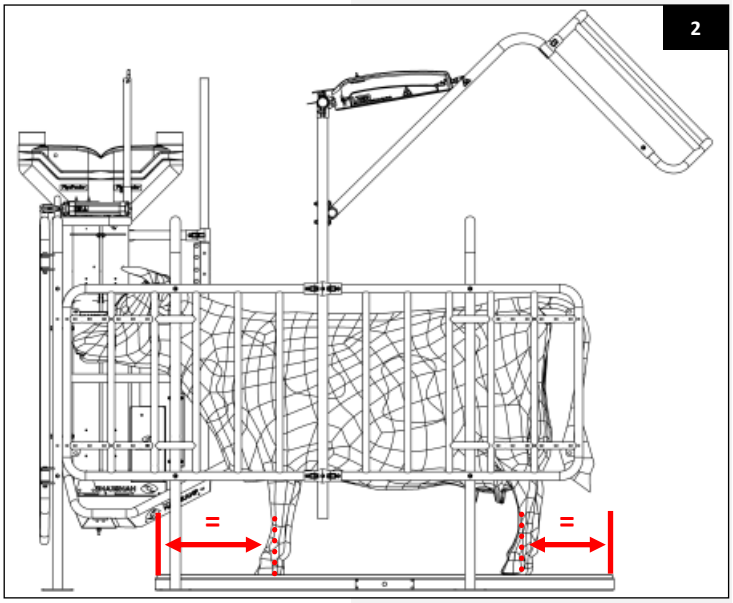

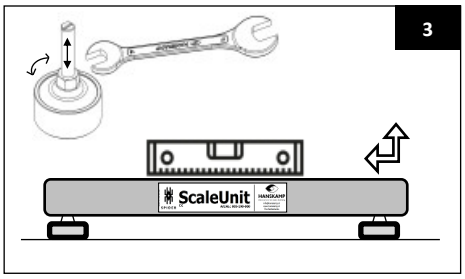

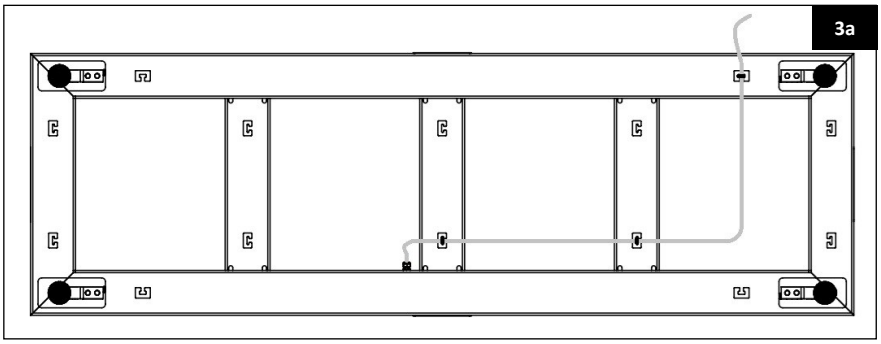

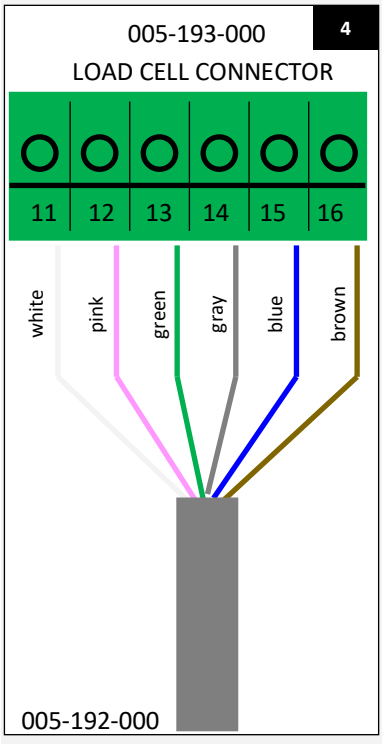

4.2 Electrical assembly

Caution! Only a qualified electrician may install the power supply for the weighing floor.

Caution! During installation, make sure that animals are unable to access the area around the wiring.

Caution! Check whether the earth connection of the electrical system and all parts of the weighing floor satisfy local rules and regulations.

1. Place the weight transmitter and the ethernet interface (1, figure 5) in the Spider unit.
2. Connect the cable of the weighing floor with the connector to the 6-way input of the weight transmitter that is still free (LOAD CELL) (figure 4) (2, figure 6). The cable (10 m) must not be shortened.
3. Connect the power cables using the welding clamps (3, figure 6).
4. Insert the UTP Cat5e cable of the ethernet interface into one of the free LAN connections of the CarrierBoard (4, figure 6).
5. Also connect the power supply to the weight transmitter using the welding clamps (5, fig. 6). In addition, connect the Ethernet interface using the DC converter.
6. Reconnect the Spider to the power supply to start up the entire system (6, figure 7).

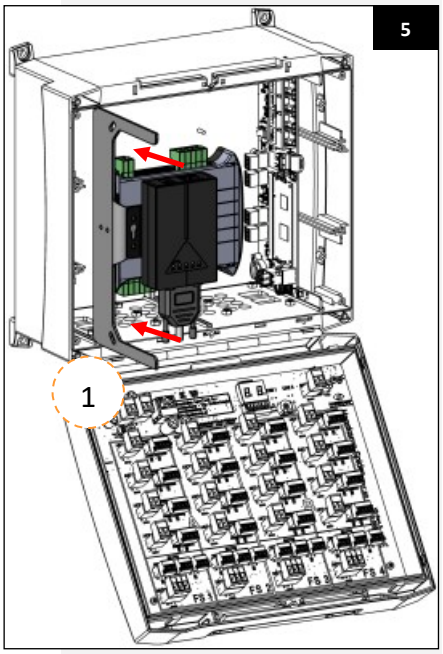

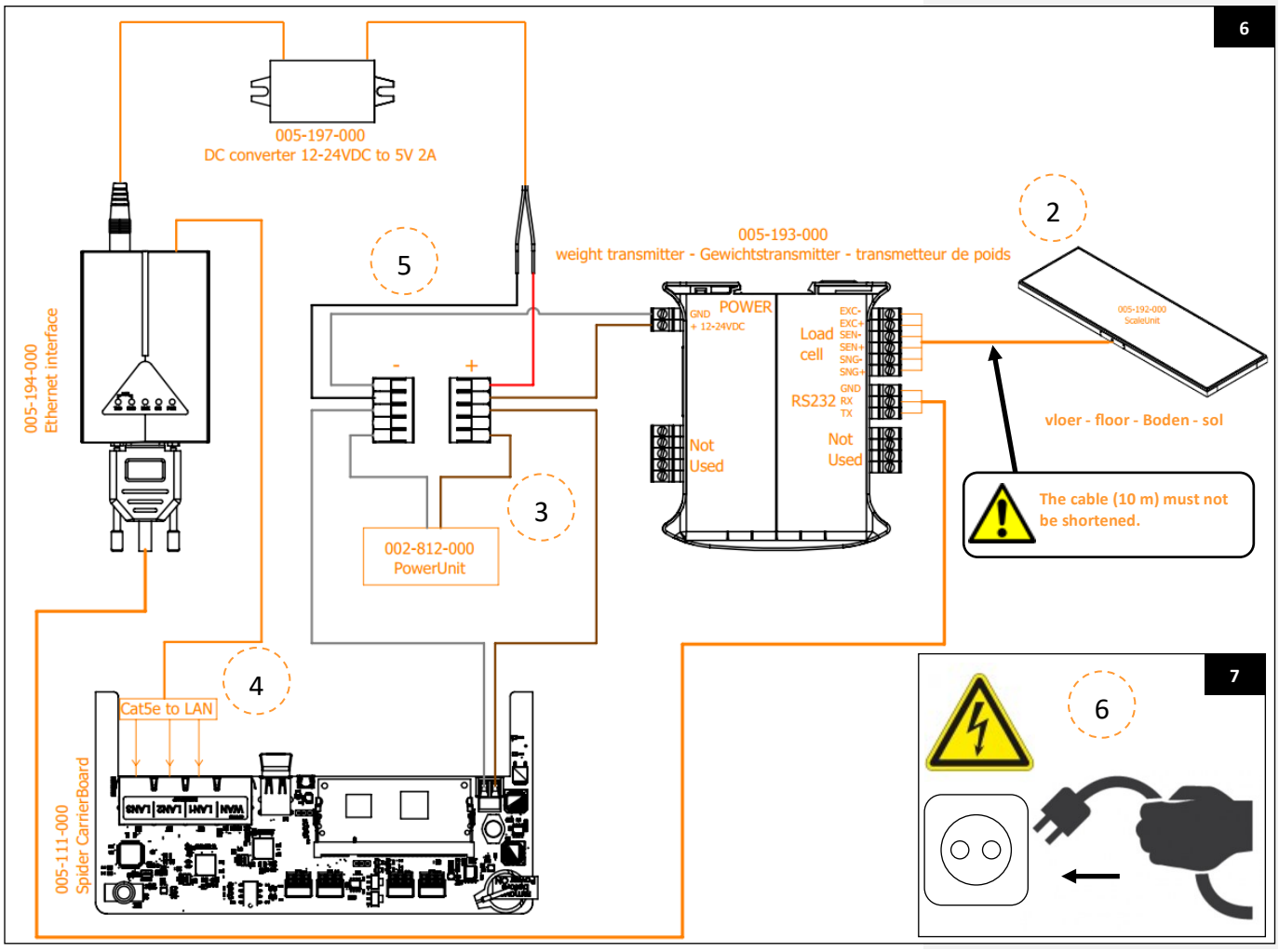

4.3 Adjusting software settings

1. Open the Spider user environment.
2. In the menu, go to 'Maintenance' and log in as 'Administrator' (1).
3. In the 'System' menu (2), go to 'Configuration PCB's' (3) and then select the 'Scale' tab (4).
4. Select 'Add' (5), and a pop-up screen will open.
5. Select 'Search for weighing units' (6), and a drop-down menu will appear (7).
6. Select the (MAC) address that corresponds to the one on the sticker on the weight transmitter and/or the ethernet interface.
7. Select 'Save' (8).
8. The weighing floor can now be connected to the feed station in question. To do this, go to the 'SpiderPCB' tab (9) of the 'Configuration PCB's' page.
9. Click on the line of the relevant SpiderPCB. A pop-up screen will open.
10. Select the feed station in which the ScaleUnit is located, then under 'Scale' select the correct (MAC) address (10). Then select 'Save' (11). Carry out these steps for every weighing floor.
11. Restart the entire Spider system by disconnecting the power supply plug from the mains for 10 seconds (figure 13).
12. The ScaleUnit is now ready to use.

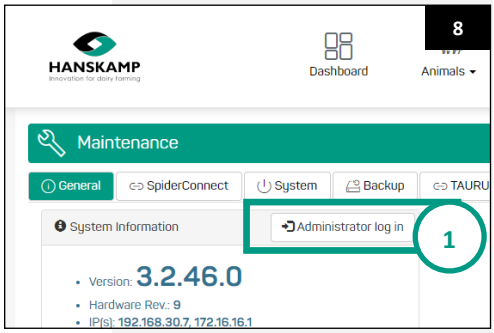

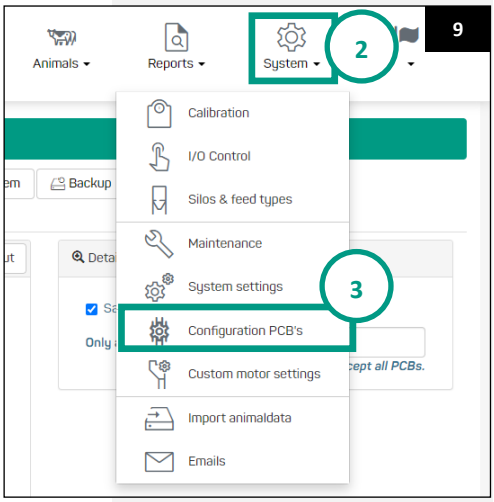

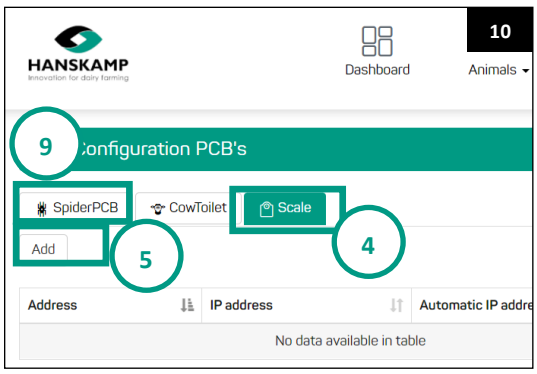

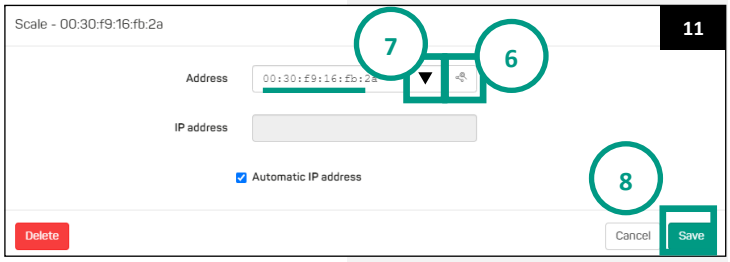

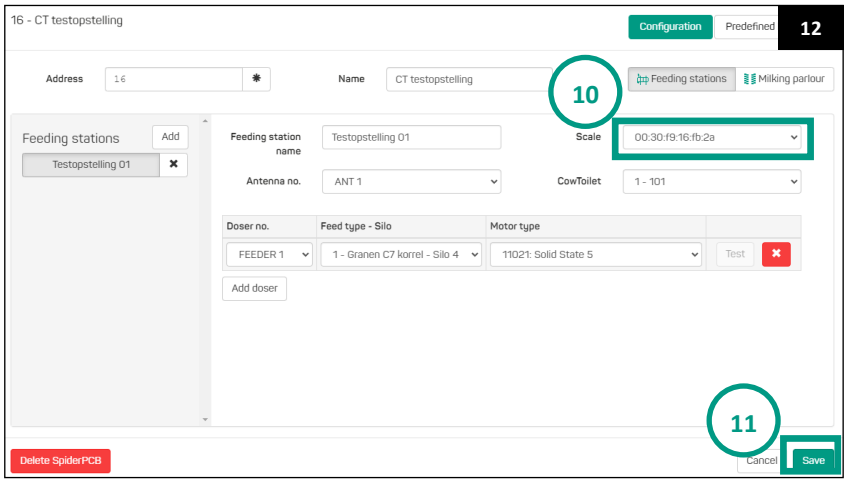

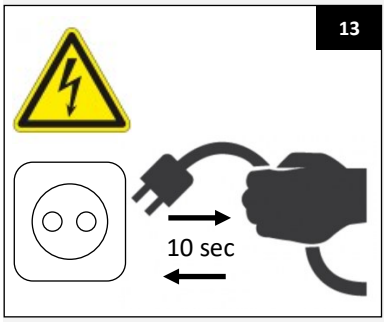

4.4 Commissioning

The weighing floor must be set to 0 kg before first use. The current weight can be read in real time in 'Reports' → 'Scale' (figure 14). If the floor is clean and no animal is standing on it, but a weight is displayed, adjust to 0 manually (figure 15).

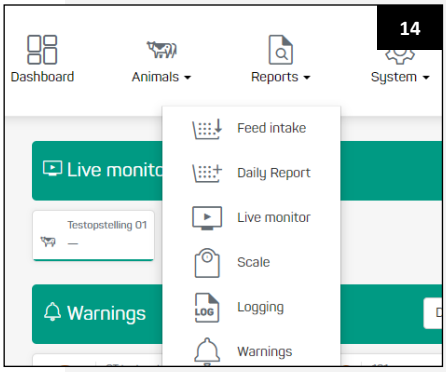



5. Operation

Caution! Follow all the instructions in this user guide, in particular the safety chapter.

Caution! If the ScaleUnit is damaged or no longer works in the prescribed manner, work must be stopped immediately. Work may only be resumed once the weighing floor has been repaired or replaced, and has been inspected. Consult your supplier if the machine is not working properly.

5.1 Reading weights

The Spider program shows the weight of each cow weighed in various places:

1. In the 'Animals' → 'Animal record' overview: The column furthest to the right shows the last measured weight of each animal. This column can also be arranged in ascending or descending order by clicking the button in the table (figure 16).
2. On the 'Animal record': The 'Weight' field shows the last measured weight of this specific animal (figure 17).
3. The 'Feed intake' graph shows the trend over the last 14 days for this specific animal (figure 18).
4. The 'Visit details' graph shows the measured weight per day and time for this specific animal (figure 19).

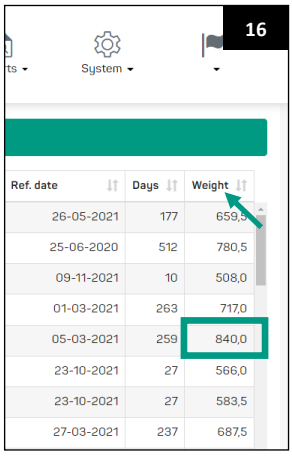

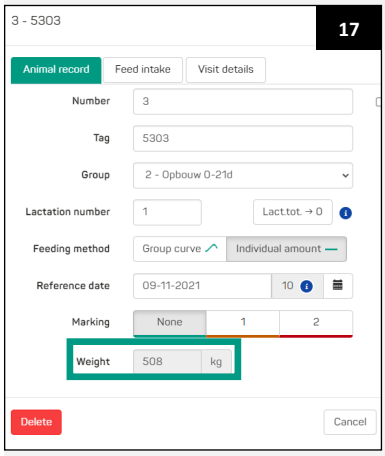

5.2 Resetting

Deenergise the weighing floor and the Spider system to reset them. Saved values/parameters are maintained.

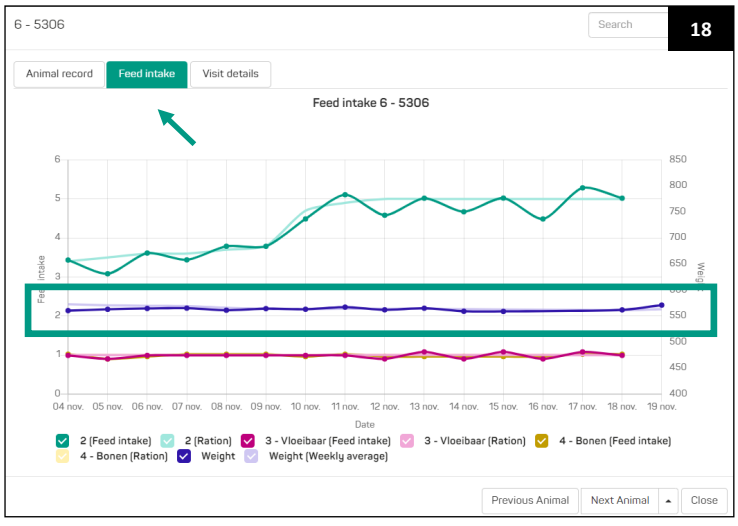



6. Maintenance

Caution! Follow all the instructions in this user guide, in particular the safety chapter.

Caution! Maintenance must be carried out by qualified personnel with due observance of warnings on the weighing floor and with due observance of the user guide.

6.1 Preventive maintenance

The following maintenance instructions assume normal use. In the case of intensive use or use under extreme conditions, maintenance must be carried out more frequently.

Item	1x per...	Comments
ScaleUnit	Day	Check whether the floor is clean and free from things such as manure or straw (bedding). Despite the automatic calibration of the weighing cells, elements remaining on the floor may affect a measurement.
ScaleUnit	Day	Check for unusual sounds after starting the system.
Warning pictograms	Week	Check readability, and replace if necessary.
Warning and type number stickers	Week	Check readability, and replace if necessary.
Electrical installation	Month	Check for damage. Replace any damaged electrical wiring, cable covers, switches or parts immediately. Only a qualified electrician may install the power supply for the weighing floor. During installation, make sure that animals are unable to access the area around the wiring. Check whether the earth connection of the electrical system and all parts of the weighing floor adhere to local rules and regulations.

6.2 Spare parts

Only original Hanskamp parts and accessories may be used for the weighing floor.

6.3 FAQs

Problem/question	Potential cause	Solution/answer
The weighing floor is connected, but doesn't display or record any weights.	Communication problem.	Deenergise the weighing floor and the Spider system, and restart them.
An animal is on the scales, but nothing is recorded (the weight can be read).	The cow has not been recognised.	Recording is only active when a transponder is recognised.

6.4 Version management

Overview of changes made in these installation and operating instructions:

No.	Date of issue	Chapter(s)	Comments
0.1	12/2021	All	First edition
0.2	11/2024	Pages 7, 12	Page 7: Image replaced and text step-by-step plan partly adjusted. Page 12: Image has been replaced and description of converter cable added at 005-197-000 in the article number table.
0.3	12/2025	Pages 1, 13	Page 1 Change of place name. Page 13 Change of address Hanskamp.
0.4	06/2026	Page 12	Dimensioned drawing updated
0.5	09/2026	Pages 4, 6 and 7	Page 4: Addition in specification table: the cable (10 m) must not be shortened, and weighing range incremented in 0.5-kg steps. Page 6: Added illustration of the cable from the ScaleUnit to the junction box. Page 7: Added text in the illustration stating that the cable (10 m) must not be shortened.

Copyright and disclaimer
The information in this publication is for informational purposes only, and is not intended as a sales quote. The products offered may differ from the images. Any brand or product references in this manual are for identification purposes only. The company and product names mentioned in this manual are trademarks. No part of this publication may be reproduced or made public without the prior written consent of Hanskamp AgroTech BV. Although this publication has been compiled with the greatest care, Hanskamp AgroTech BV is not liable for any damage that may arise due to any errors or omissions it might contain. The Dutch installation and operating instructions are the original installation and operating instructions. Translations into other languages are based on the Dutch installation and operating instructions as a source document. Hanskamp AgroTech BV accepts no liability for differences between the translations. If there are any doubts about the content and accuracy of the translated installation and operating instructions, the Dutch installation and operating instructions shall prevail.

6.5 Dimensional drawing

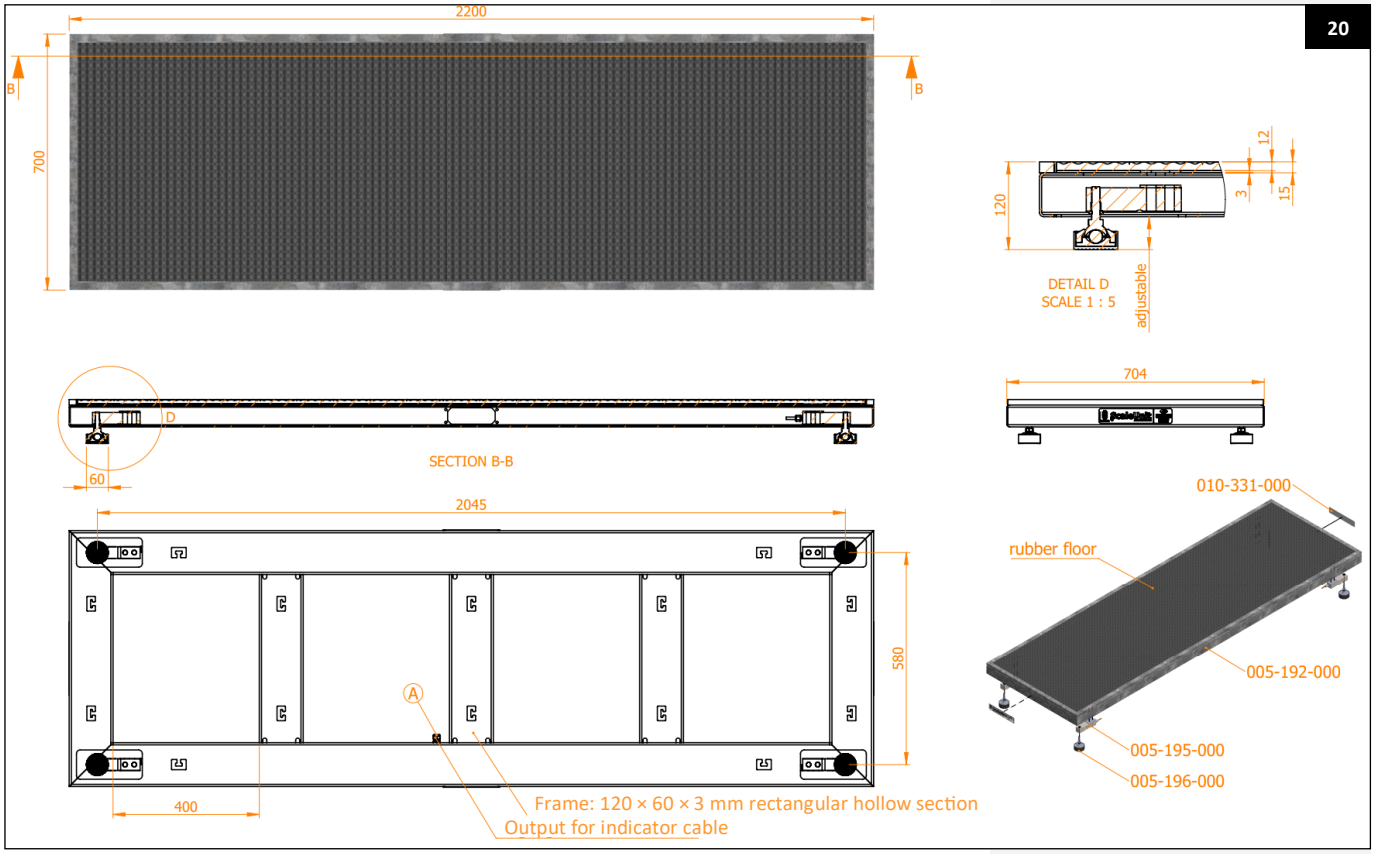

6.6 Parts

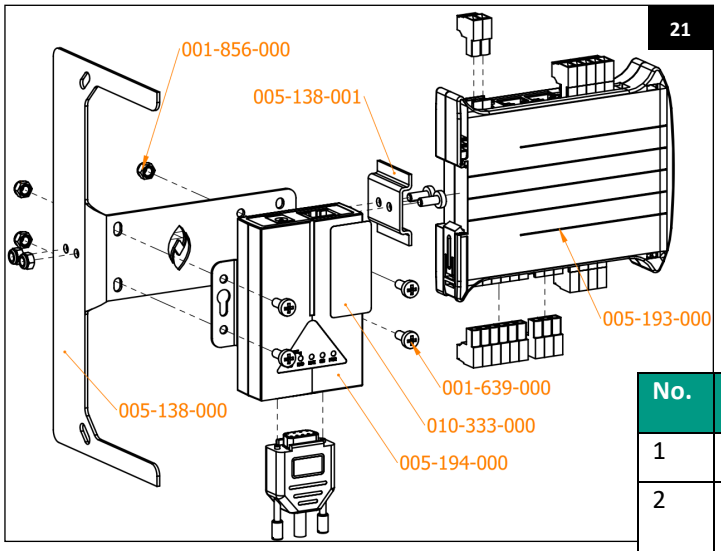

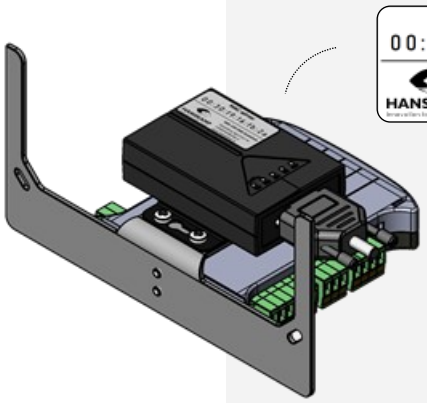

011-333-000

No.	Art. no.	Description	Quantity
1	005-190-000	ScaleUnit complete	1
2	005-192-000	Floor with rubber surface 700 x 2200 mm	1
3	005-193-000	Weight transmitter	1
4	005-194-000	Ethernet interface	1
5	005-195-000	Stainless steel LOAD CELL	4
6	005-196-000	Adjustable foot, stainless steel with ball joint	4
7	005-197-000	ScaleUnit 24VDC → 5VDC converter cable for power supply ethernet interface, 1 m	1



Hanskamp AgroTech BV
Xenonstraat 6
7031 HX Wehl
The Netherlands
Tel: +31 (0)314 - 393 797
www.hanskamp.com

Also take a look at: