MultiFrame

In parlour feeding

075-000-000

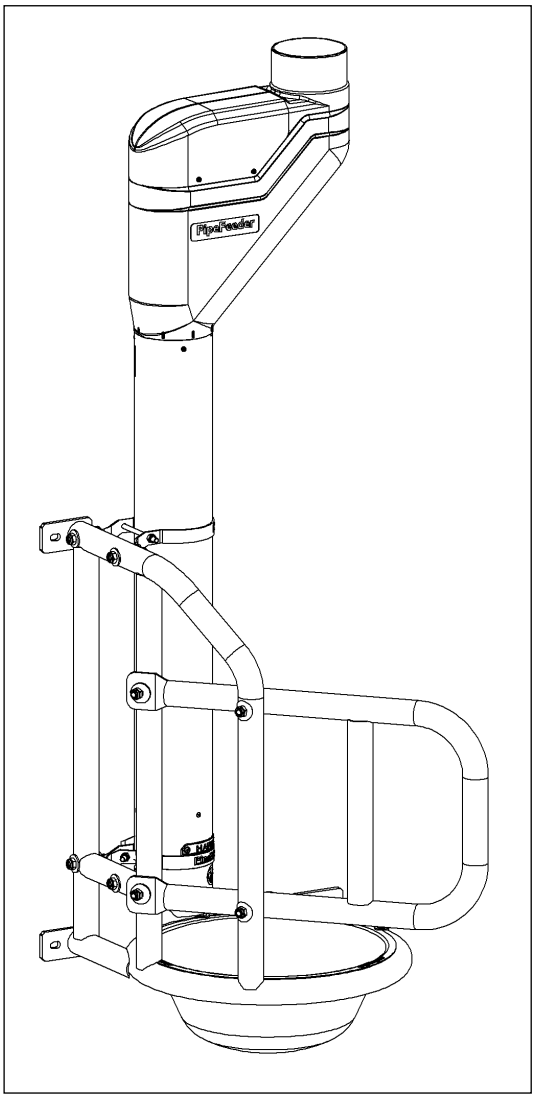

Installation and Operating Instructions **EN**

HANSKAMP
Innovation for dairy farming

Article number: 010-243-000

Date: February 2026
Versie 2.4 - Translation of original instructions

Wehl,
The Netherlands
www.hanskamp.com

MultiFrame Installation

1. First determine where the MultiFrame is to be mounted. The distance between the MultiFrames depends on the type of milking parlour. The installation dimensions can be taken from the milking parlour drawing (fig. 3).
2. Once the distance has been determined, drill the holes according to the dimensions shown in the drawing (fig. 1).
3. Then mount the MultiFrame to the wall. Fixing materials are not included.

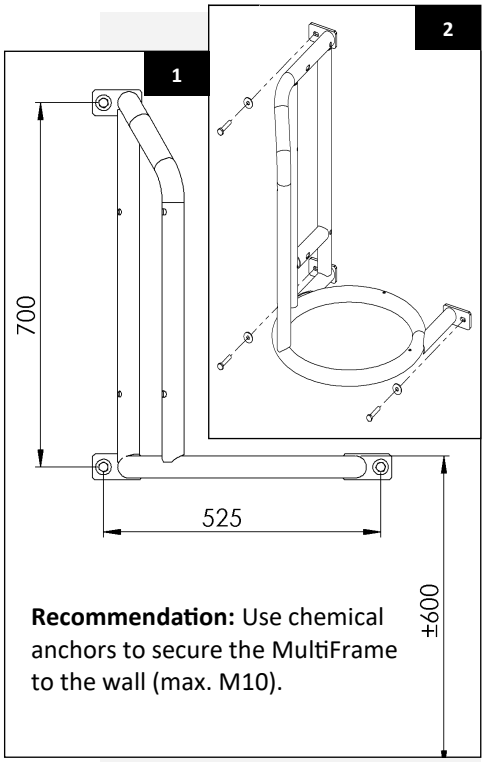

Recommendation: Use chemical anchors to secure the MultiFrame to the wall (max. M10).

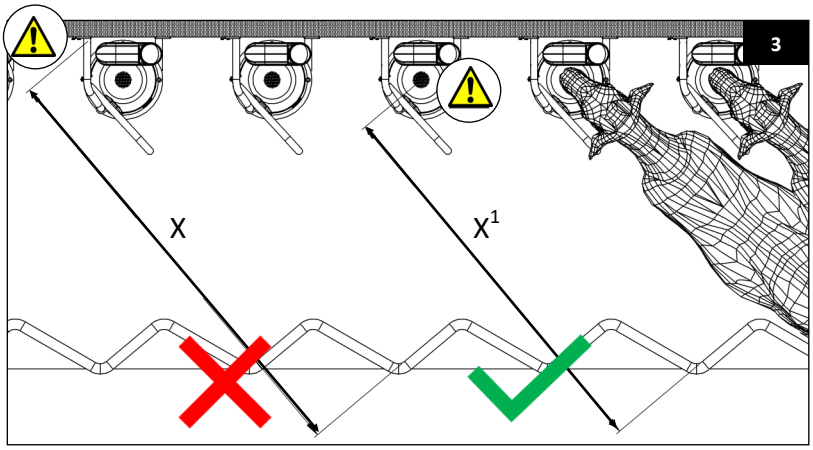

X^1 = depends on the size of the cow; measure this on site (total approx. ± 2000 mm to ± 2400 mm).

= 2400 mm = 2000 mm

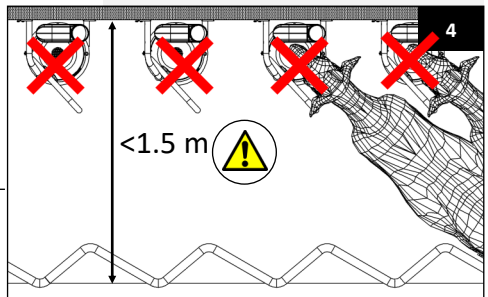

The MultiFrame is not suitable for stall widths of less than 1.5 m.

Feed Trough Installation

1. Now install the feed trough in the MultiFrame. The feed trough can easily be placed in the frame by sliding it at an angle underneath the two vertical tubes welded to the ring. Once the edge of the feed trough is positioned beneath the vertical tubes, the trough can be placed onto the ring. The feed trough is now secured on one side.
2. Secure the other side of the feed trough using the supplied fixing materials, as shown in figure 5.

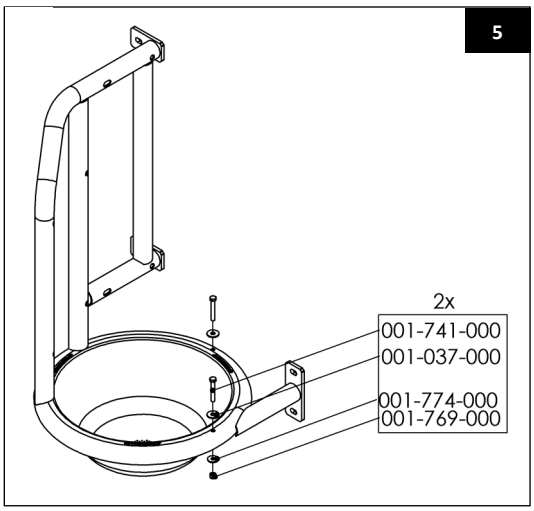

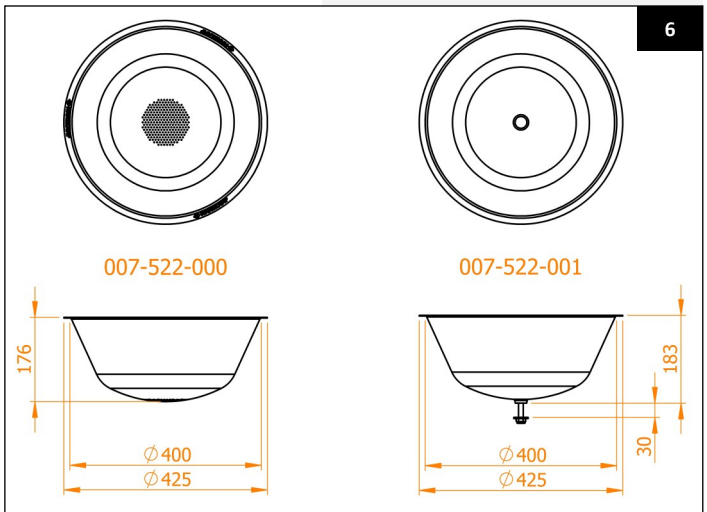

There are two types of feed troughs available: The perforated feed trough (art. no. 007-522-000) and the traditional feed trough with one opening (art. no. 007-522-001).

PipeFeeder Installation

1. Mount the PipeFeeder onto the MultiFrame using the supplied fixing materials, as shown in figure 7.
2. Ensure that the bottom of the PipeFeeder tube reaches exactly to the top of the feed trough.
3. To allow the PipeFeeder to dispense neatly into the feed trough, it is advisable to rotate the PipeFeeder tube 45° so that the dispensing section is positioned above the feed trough.

Note: If the stainless steel tube of the PipeFeeder is rotated relative to the plastic part, the PipeFeeder must be readjusted to maintain the anti-spill function. For instructions on adjusting the PipeFeeder, see manual 001-847-000.

If the PipeFeeder cannot be mounted to the frame due to a truss or other obstruction, it can also be mounted on the wall. The distance between the wall and the PipeFeeder should remain the same as when mounted to the MultiFrame, ensuring that all PipeFeeders are aligned in a straight line and that the milking parlour maintains a neat appearance.

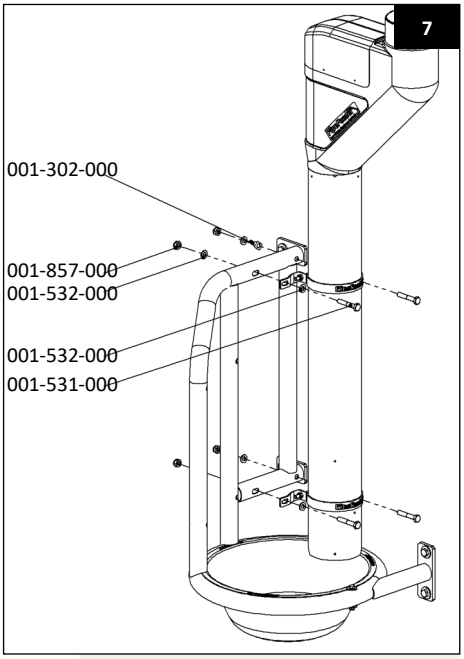

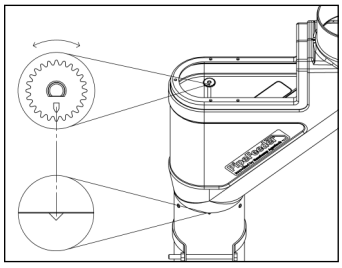

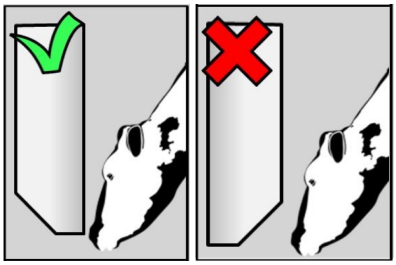

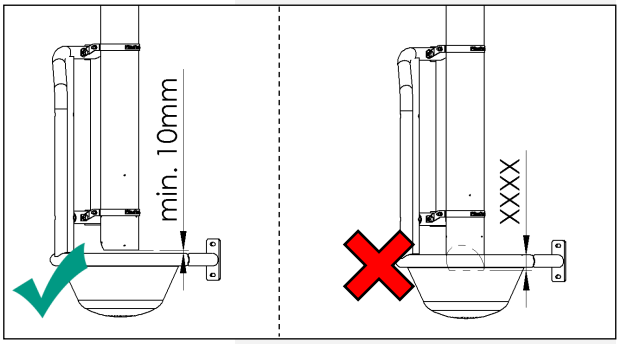

MultiFrame Angle Configurations

The MultiFrame for 30° positions consists of the complete frame, as described above. This frame is supplied without a side gate. In 40°, 50° and 60° milking parlours, the frame can be fitted with a short intermediate gate (art. no. 007-504-000). In 70° and 80° milking parlours, the MultiFrame can be fitted with a long intermediate gate (art. no. 007-505-000).

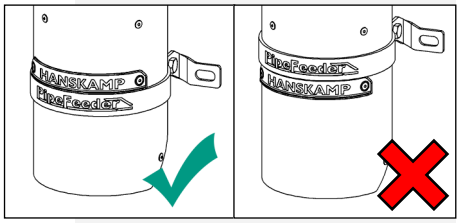

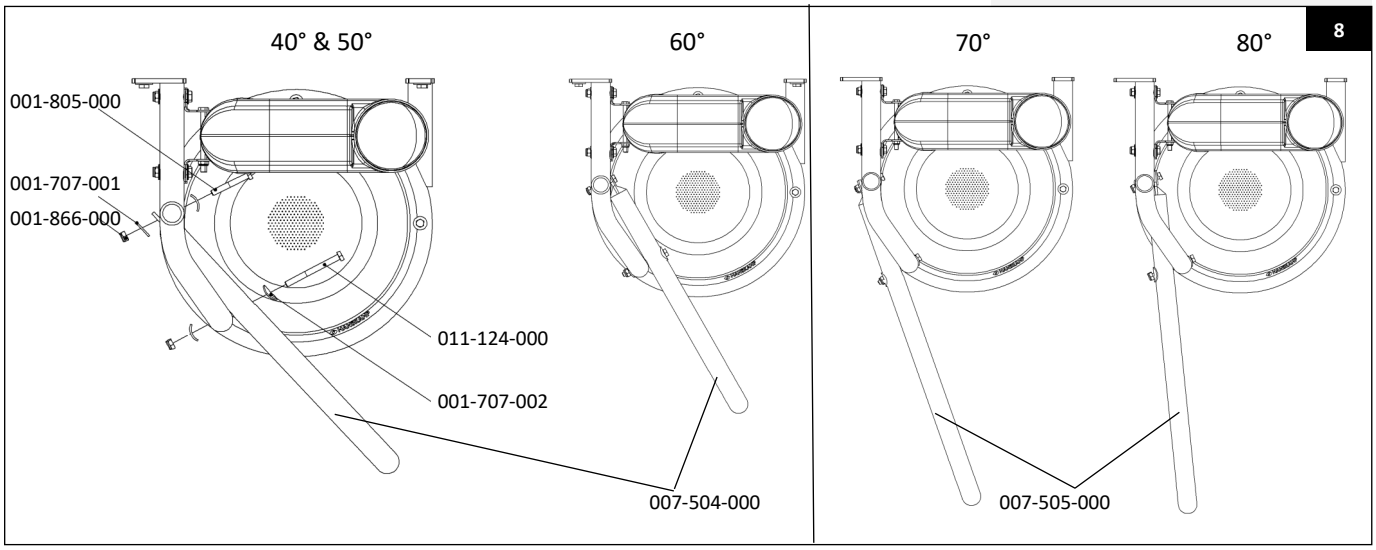

Annex: Right / Left

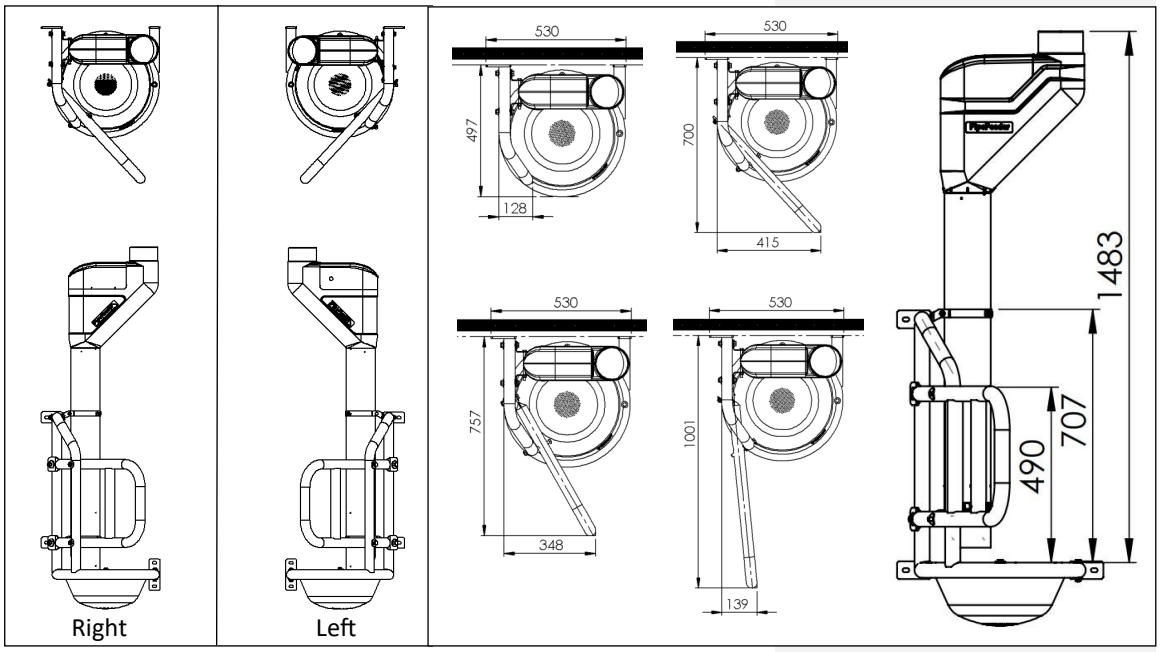

MultiFrame Grounding

It is recommended to earth all MultiFrames. A tubular cable lug (art. no. 001-302-000) is supplied for this purpose. It can be mounted between any bolt and nut.

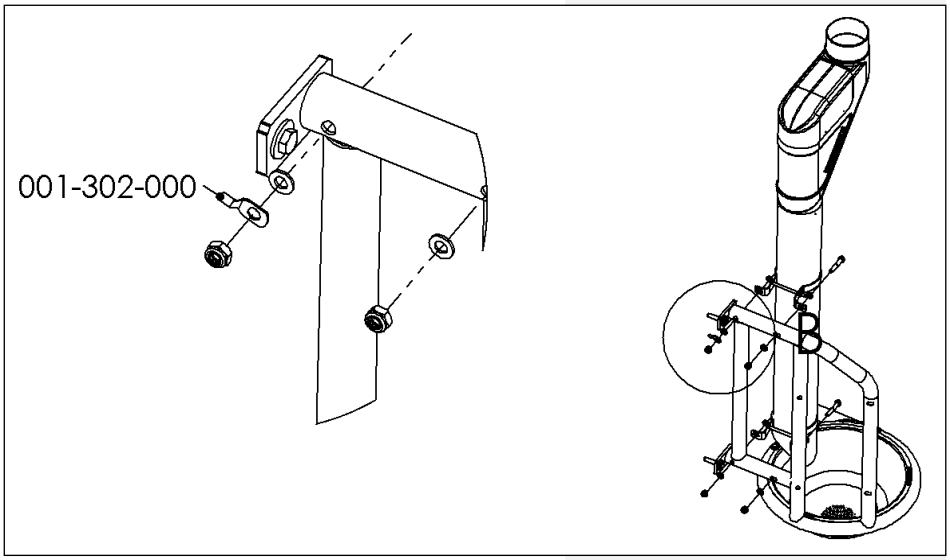

MultiFrame Maintenance

Note! Clean the feed trough regularly and ensure it remains clean. After cleaning, drain any water from the feed trough.

Reader/Antenna Support Installation (Individual Position Recognition)

Various antenna supports can be mounted on the MultiFrame. Antenna support, art. no. 007-524-000, is suitable for DeLaval antennas. Antenna support, art. no. 007-525-000, is suitable for Hanskamp, Nedap, and Fullwood antennas (see fig. 9). Figures 10–13 show the installation of art. no. 007-525-000. Antenna support 007-524-000 can be mounted in the same way.

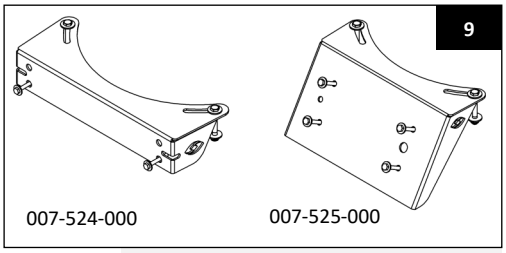

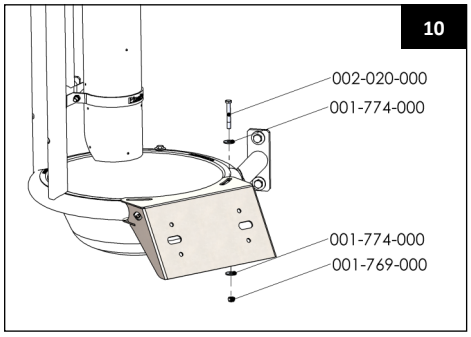

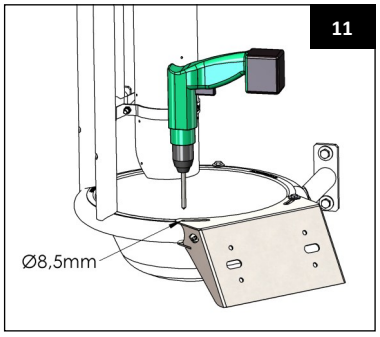

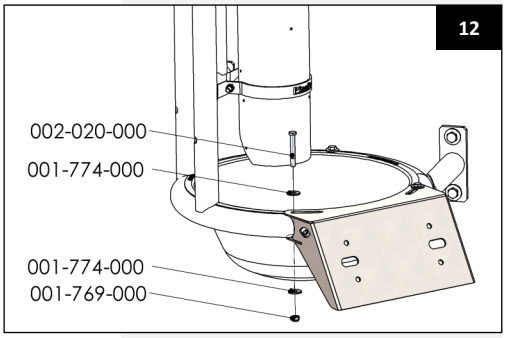

To route the antenna cable neatly, a cable guide tube can be installed (see figs. 14-16). This is available as a set from Hanskamp: art. no. 007-530-000 for neck collar tag readers and art. no. 007-531-000 for leg tag readers.

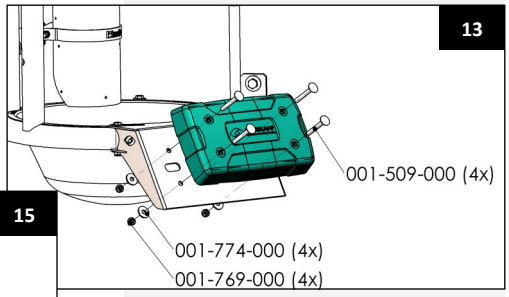

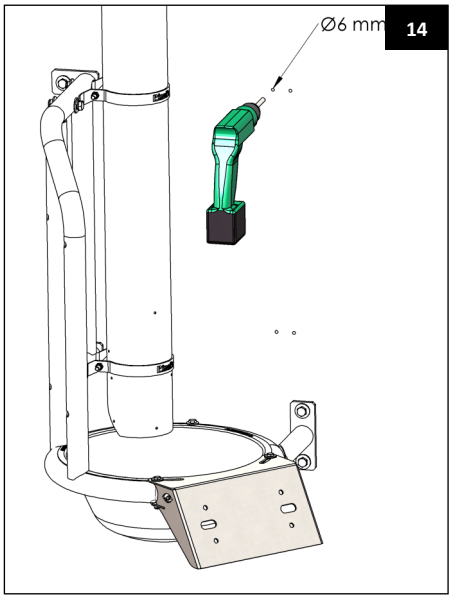

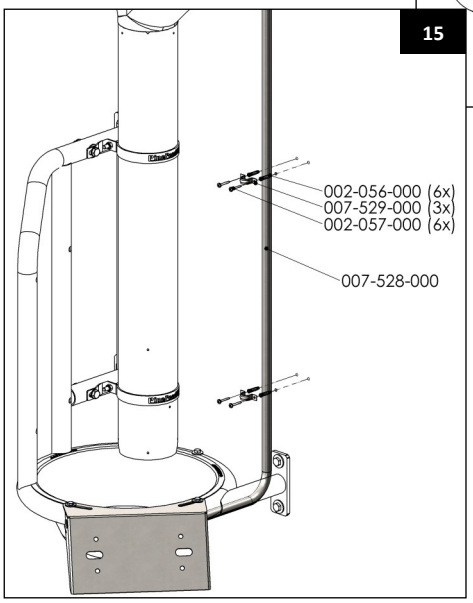

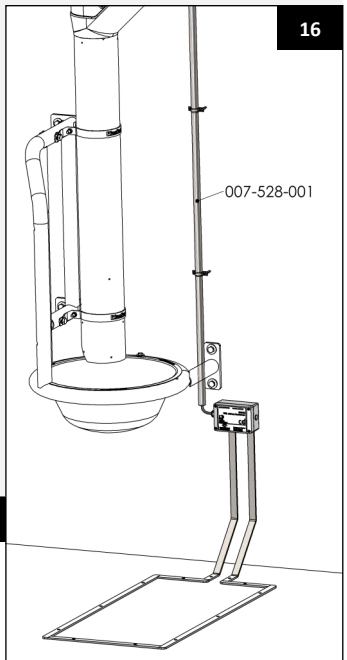

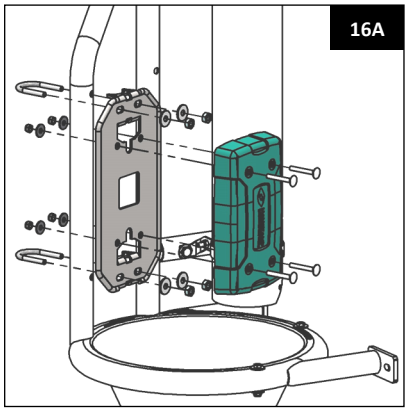

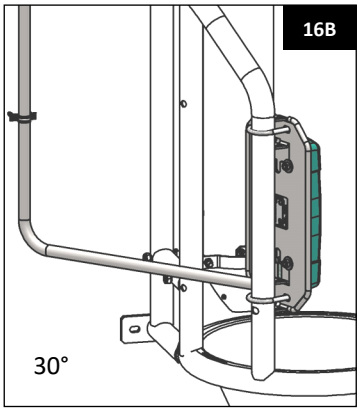

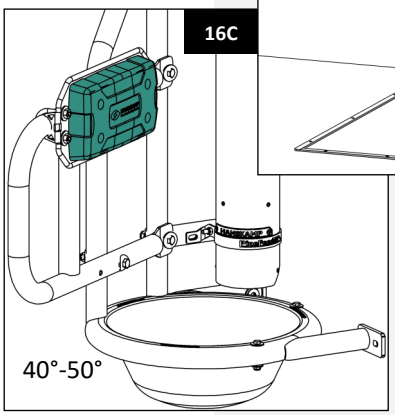

Options:

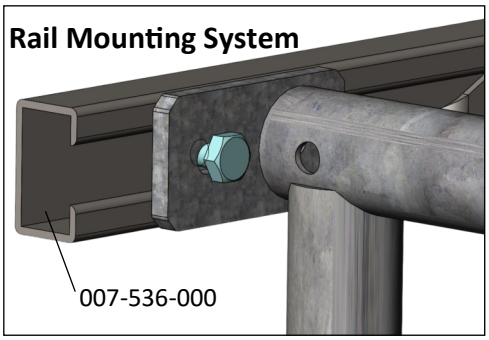

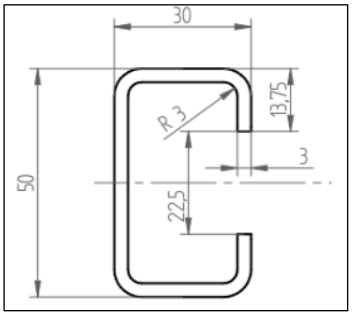

Rail System	
Art. no.	**Description**
007-536-000	Rail 50×30×3 mm, l=2000 mm, for MultiFrame mounting
007-538-000	Set of mounting hardware for PF clamp 011-102-000 on rail
007-540-000	Set of mounting hardware for MultiFrame on rail

Protective Plate

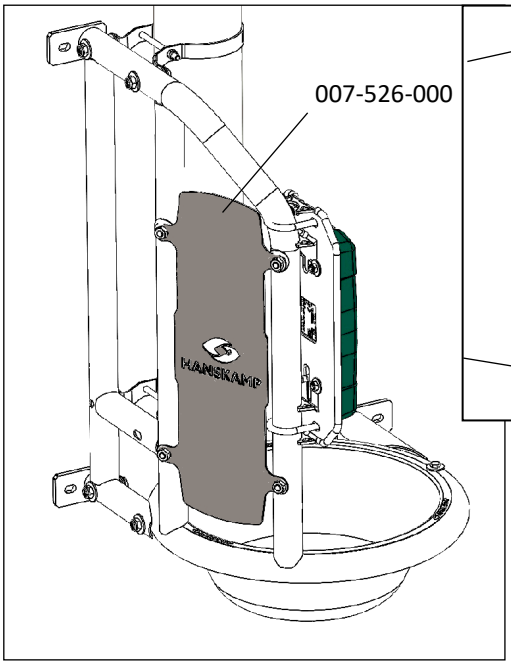

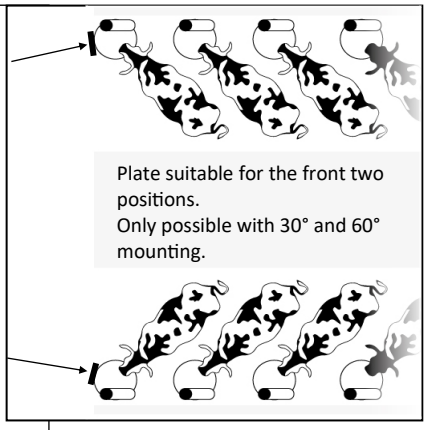

Wall-Side Mounting Plate

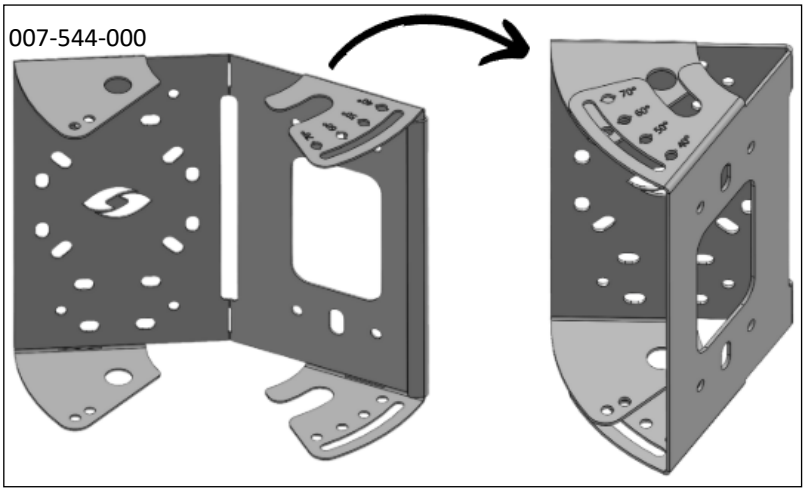

Suitable for 40°-70° herringbone milking parlours.
Only required for one side of the parlour → 075-xxx-005.
At 30°? → Mount the antenna directly on the wall.

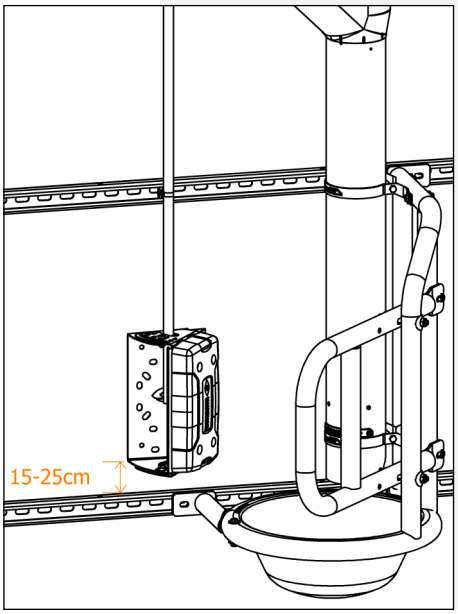

Overview of Revisions in This Installation and Operation Manual			
No.	**Release date**	**Chapter(s)**	**Remarks**
1.0	01/2016		First edition.
1.1	02/2016	Appendix & Parts List	Article names updated; earthing clamp added.
1.2	03/2017	Appendix	FAQ added.
1.3	01/2018	PipeFeeder Installation	Figure added.
1.4	01/2018	Antenna Installation	Antenna installation for individual position recognition added.
1.5	06/2019	Front page, Figs. 1 & 2	Updated to the latest MultiFrame version.
1.6	03/2020	Pages 2 & 4	Figure added on page 2; note added on page 4.
1.7	09/2021	Pages 2, 5 & 6	Page 2: 2400 corrected from 2300; page 5: 16.C added; page 6: optional plate added.
1.8	09/2023	Page 2	Figure inserted; note added: MultiFrame is not suitable for stand widths under 1.5 m.
1.9	05/2024	Page 2	Advice added: use chemical anchors to fix the MultiFrame to the wall.
2.0	09/2024	Page 6	Rail system figures and article numbers added.
2.1	04/2025	Page 2	Text: 'Max. M10' added to Figure 1.
2.2	12/2025	Page 6	Page 6 added. Options list expanded with 007-544-000.
2.3	12/2025	Pages 1 & 9	Page 1: location name updated; Page 9: Hanskamp address updated.
2.4	02/2026	Page 2	New image (6) regarding the dimensions of the carriage bolt installation.

FAQ		
Problem	**Possible Cause**	**Solution**
Side fence does not fit; mounting holes do not align.	Side fence is positioned incorrectly.	Rotate the side fence 180° and try again.
No mounting location for individual position recognition.	Antenna mounting plate not ordered or delivered.	For a DeLaval antenna, order art. no. 007-524-000. For a Hanskamp, Nedap, or Fullwood antenna, order art. no. 007-525-000.

MultiFrame Components

Art. no.	Description	Quantity
007-501-000	MultiFrame, right	1
007-502-000	MultiFrame, left	1
007-504-000	Short side fence	1
007-505-000	Long side fence	1

Feed Trough Type

Art. no.	Description	Quantity
007-522-000	Perforated feed trough	1
007-522-001	Feed trough with Ø20 mm hole	1

007-506-000 Set of Mounting Hardware

Art. no.	Description	Quantity
001-037-000	Washer M8 A2 r 9.0 DIN 440R	2
001-302-000	Tube cable lug M10 for MultiFrame grounding	1
001-382-000	Mini grip packaging bags 100 × 150 mm	1
001-531-000	Bolt M10 × 60 DIN 931 A2	4
001-532-000	Washer M10 A2 DIN 125 / A1	8
001-707-001	Washer M10 × 34 × 3 DIN 440 8.8 electro-galvanized	2
001-707-002	Curved washer M10 × 34 × 3 DIN 440 8.8 electro-galvanized	6
001-741-000	Bolt M8 × 55 DIN 933 A2	2
001-769-000	Self-locking nut M8 A2 DIN 985 coated	2
001-774-000	Serrated flange nut M8 DIN 9021 A2	2
001-805-000	Bolt M10 × 70 DIN 931 8.8 electro-galvanized	2
001-857-000	Self-locking nut M10 A2 DIN 985 coated GL	4
001-866-000	Self-locking nut M10 DIN 985 8.8 electro-galvanized	4
011-124-000	Hexagon bolt M10 × 105 DIN 931 8.8 electro-galvanized	2

Antenna Support, including Mounting Hardware

Art. no.	Description	Quantity
007-524-000	Reader support 3 mm, including mounting hardware (DeLaval)	1
007-525-000	Antenna support 3 mm AISI 304 (Hanskamp, Nedap, Fullwood)	1
007-530-000	Set with cable guide tube (neck tag recognition)	1
007-531-000	Set with cable guide tube (leg tag recognition)	1

Hanskamp AgroTech BV
Xenonstraat 6
7031 HX Wehl
The Netherlands
Tel: +31 (0)314 - 393 797
www.hanskamp.com

Also take a look at: